Design and R&D on TEM-based Kicker System at SLAC

Anatoly Krasnykh
SLAC National Accelerator Lab

The First Topical Workshop on Injection and Injection Systems, BESSY, Berlin, August 28-30, 2017

U.S. DEPARTMENT OF ENERGY
Office of Science

ARIES

SLAC NATIONAL ACCELERATOR LABORATORY

Content

Motivation for R&D and Design TEM-based Kicker Systems

Steps From our Previous Experience toward the Advanced Structures

- PEP-II TFB Kickers and Performances
- Comparison of the SLAC B-Factory and KEK B-Factory Kickers

TEM-based Kickers For ILC DR and Advanced Fast Bunch Orbit Control Systems

- LCLS-II Beamline Scenario for Pump-Probe Experiments

Multi-MW Nanosecond Range Kicker Pulser Concepts

- SLAC Approaches
- Our Demonstrators

Conclusion

Motivation for R&D and Design TEM-based Kicker Systems

- Why is the TEM-based?

The structure is very well studied* and broadly used in the accelerator field**

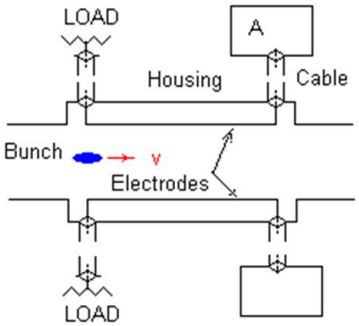

- Governed Forces for R&D and Design:
- Bunches are shorter and shorter
- Mode of kicker operations:

from single the bunch to the bunch train,

from evenly to unevenly spaced bunch trains

- What are design advances in the TEM kicker electrodynamics (from next structure to the advanced structure)?

- Kicker bandwidth issues
- Kicker beam impedance issues
- There are ton of issues from the system point of view (kicker structure, feeder, and power supply) (SLAC-PUB-17099)

* D. Goldberg and G. Lambertson, AIP #249

** PAC Proceedings

PEP-II TFB Kickers and Performances

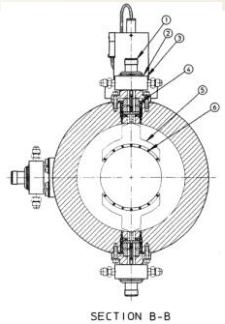

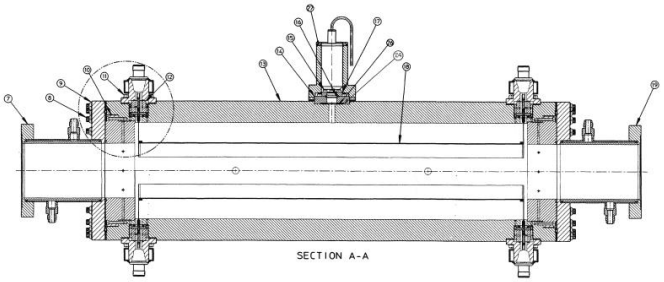

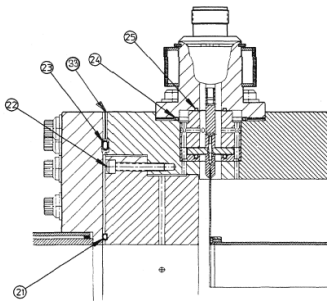

LER TFB

Parameter	Description	Value
E	Beam energy	3.1 GeV
f_{rf}	RF frequency	476 MHz
I_b	Average current	3.0 A
f_0	Orbit frequency	136.3 kHz
β_{av}	Average β	10 m
ν_f	Fractional tune	0.9
τ_b	Bunch spacing	4.2 ns
Z_{rw}	R-wall impedance	4.85 MΩ/m
α_0	Growth rate of m = 0 mode	3200 sec^{-1}
$\partial V/\partial x$	Req'd feedback gain	14.6 kV/mm
R_s	Kicker shunt impedance	24 kΩ
P_k	Available kicker power	240 W
V_{max}	Max. available kick	3.4 kV
y_{max}	Max. mode amplitude	0.23 mm
V_{mode}	Voltage to excite y_{max}	71.3 kV-turn
Δf_{min}	Req'd bandpass	13.6 kHz-119 MHz
–	Electronics bandpass	10 kHz-250 MHz
–	Kicker bandpass	DC - 119 MHz
σ_y	Vert. beam size	0.16 mm
-	Req'd dynamic range	23 dB
-	Actual dynamic range	42 dB
y_{os}	Allowable effective orbit offset	1.8 mm

HER, single bunch 0.8mA, 16.5 MV, att=26dB

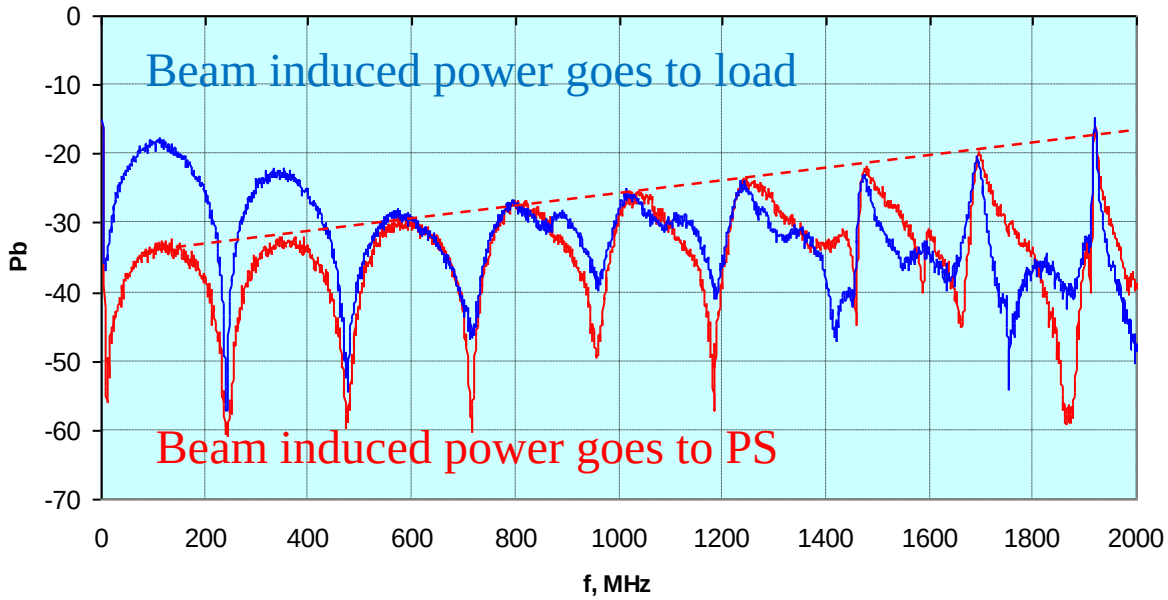

PEP-II TFB Kickers and Performances: Kicker End Issues

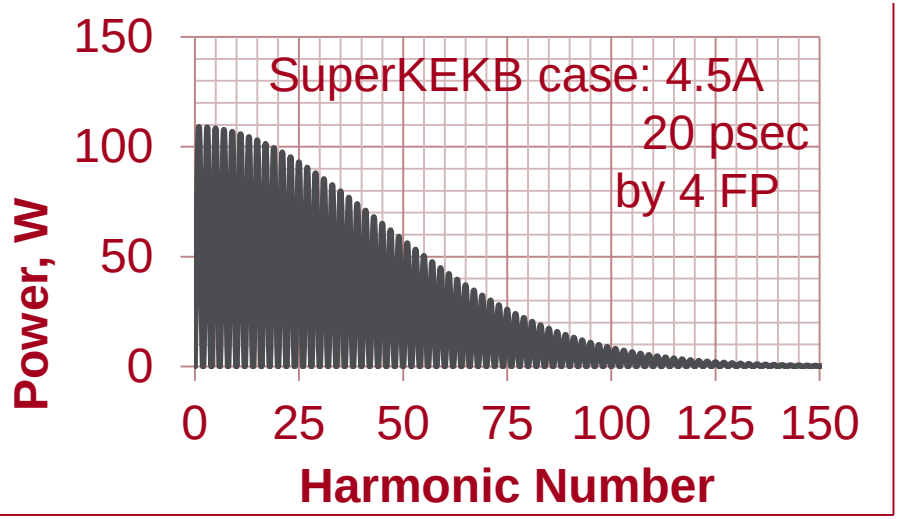

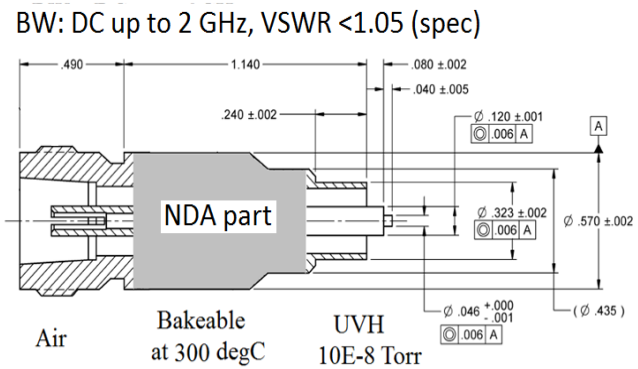

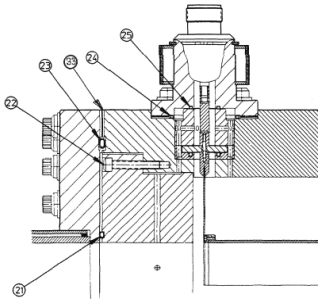

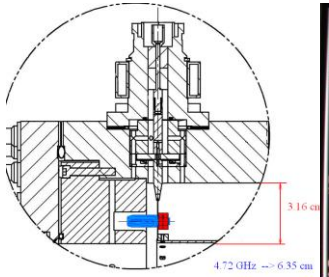

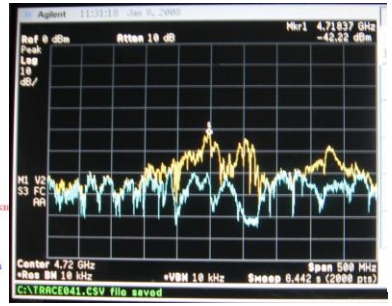

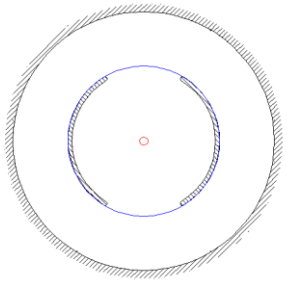

Kicker End Issues (cont.)

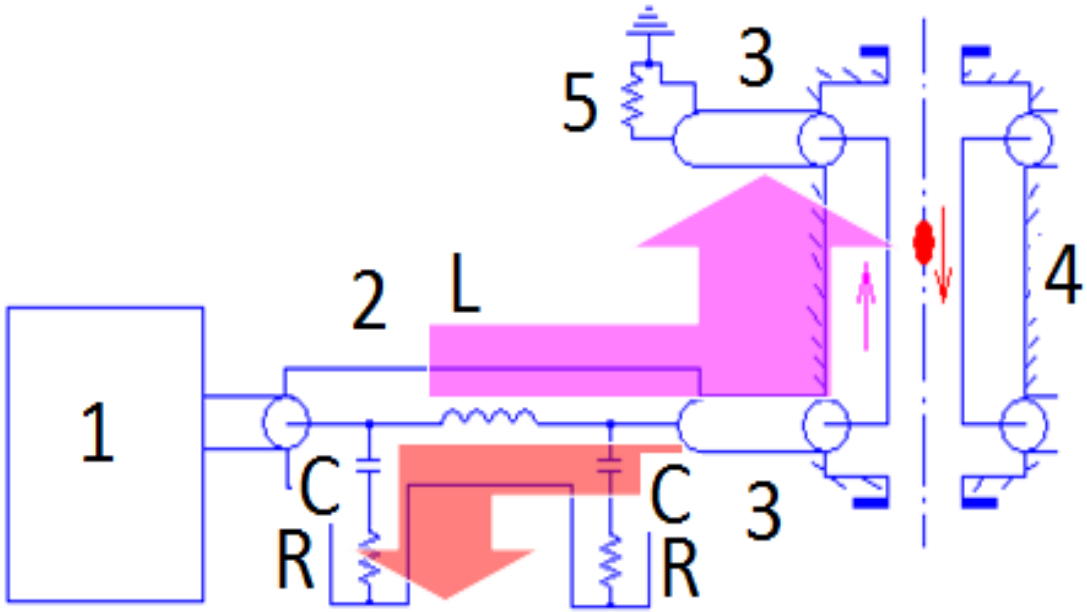

SuperKEKB case:

σ_z= 6 mm (20 psec)

t_b = 4RF periods (23.71 nsec)

Ratio is >1E3 but there are a broadband and power limitations of RC components

PEP-II TFB Kicker vs. KEK TFB Kicker

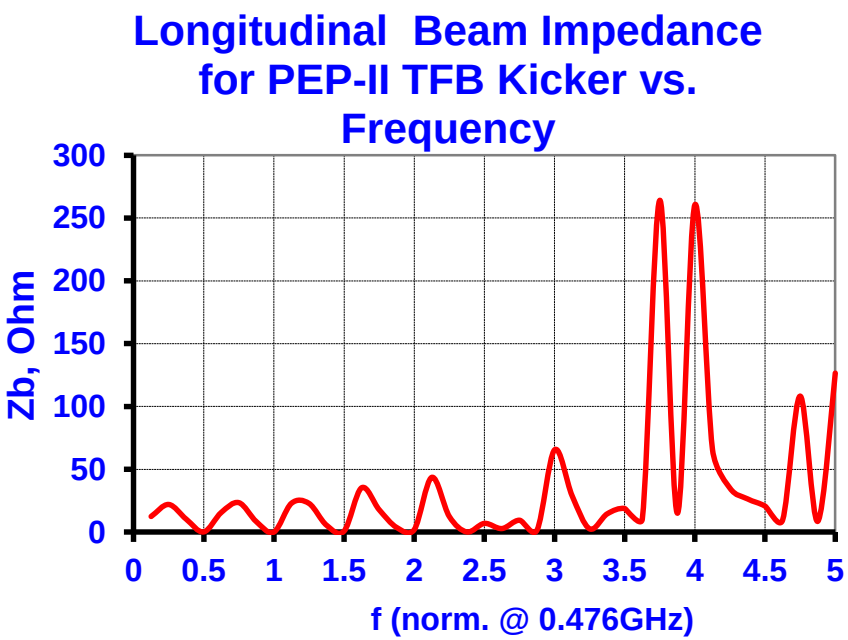

Electrode Coverage Factor, g=$\frac{1}{3}$ (2)

Aperture Radius: 44.7 mm (1.27)

Housing Radius: 78.74 mm (1.68)

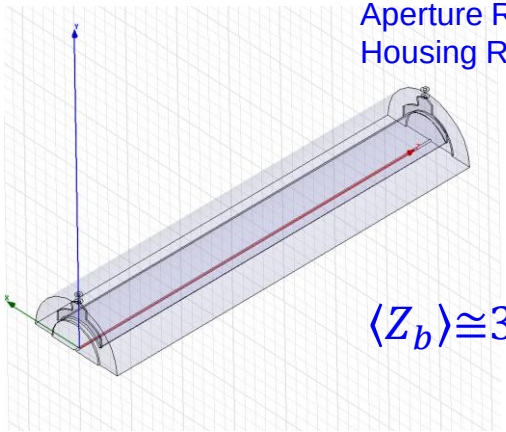

$\langle Z_b \rangle \cong 34$ Ohm for 0<f<5 (2.38 GHz)

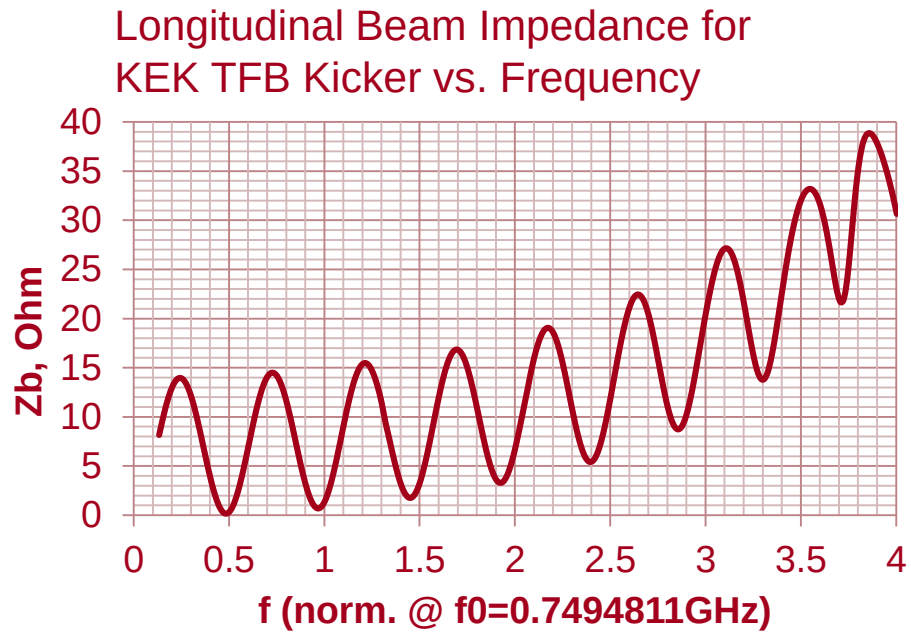

Electrode Coverage Factor, g=$\frac{2}{3}$

Aperture Radius: 35.2 mm

Housing Radius: 46.8 mm

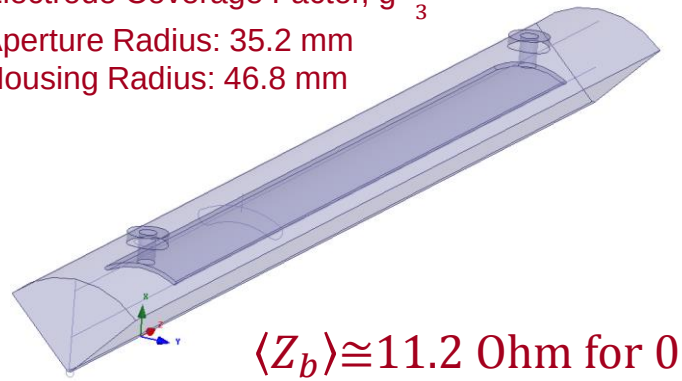

$\langle Z_b \rangle \cong 11.2$ Ohm for 0<f<3.17 (2.38GHz)

TEM-based Kickers For ILC DR and Advanced Fast Bunch Orbit Control Systems

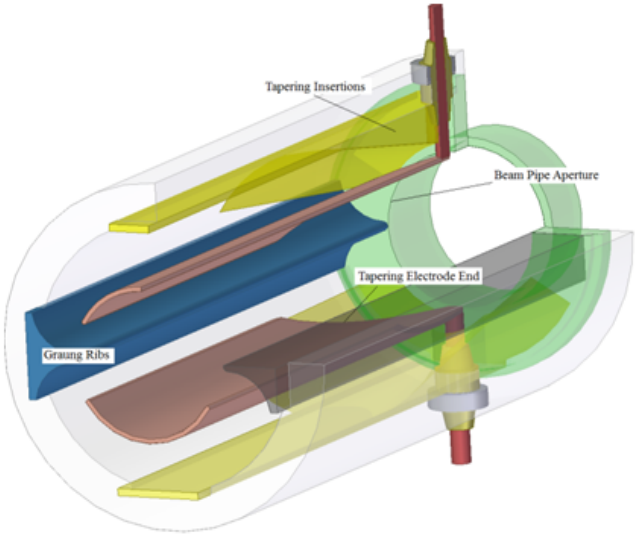

Major proposed kicker components are:

- a regular kicker part,
- two matched tapered regions (a new part),
- grounded fenders (a new part),
- kicker end HOM absorbers (a new part),
- broadband constant impedance feedthrough

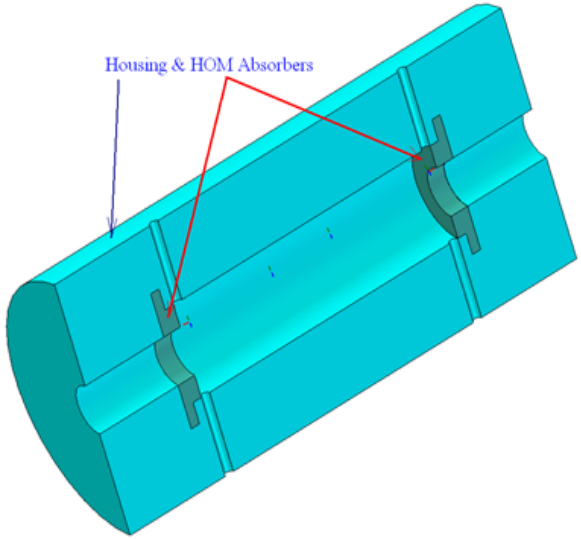

The kicker structure with new parts was proposed and discussed at SLAC (in 2002) and at KEK (in 2005)

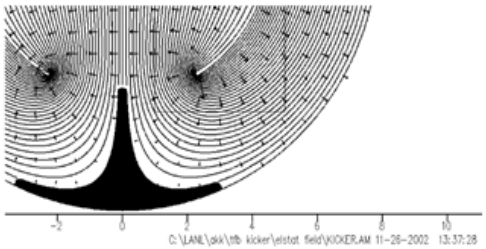

Some "Hot Aspects" for ILC DR Kicker Design

For Mini Kicker Work Shop in KEK

by

A. Krasnykh (SLAC)

Some Details on the Kicker End Region

The 2002 SLAC kicker concept (ground fenders and tempering ends was adopted and studied by several institutions (see for example, the Alisini's DAFNE publications).

Two matched tapered kicker ends: **sizes chosen in these region is based on the field uniformity and the HOM beam harmonic frequency.**

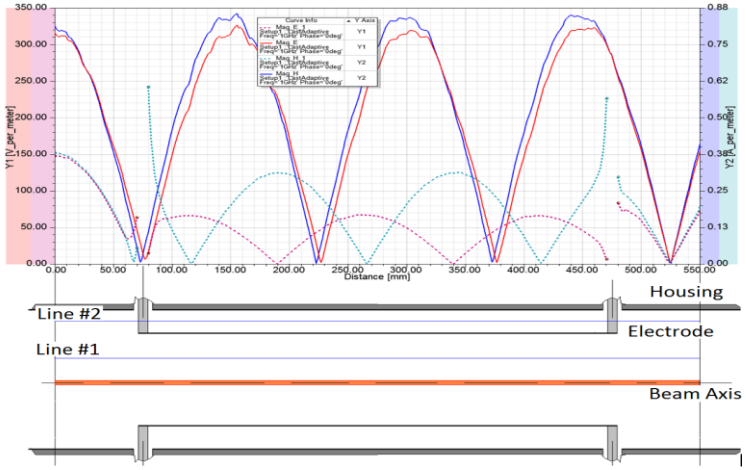

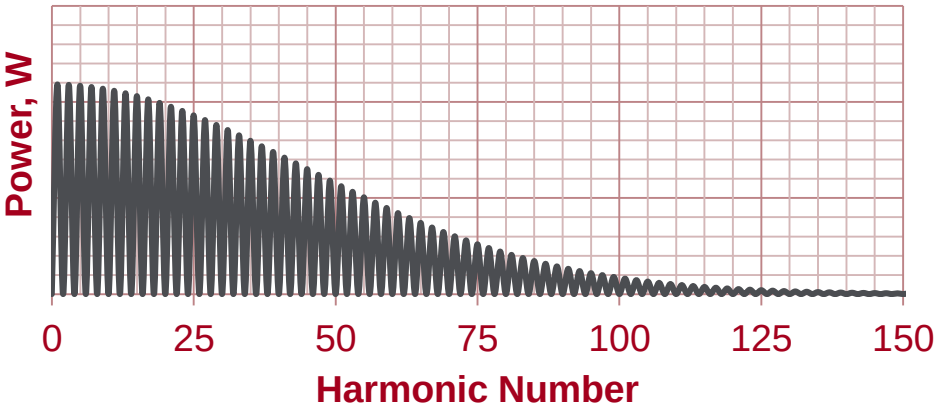

TEM-based Kickers for Advanced Fast Bunch Orbit Control Systems

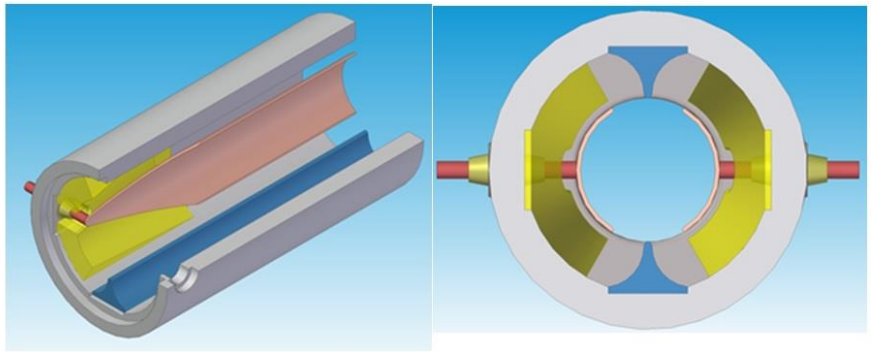

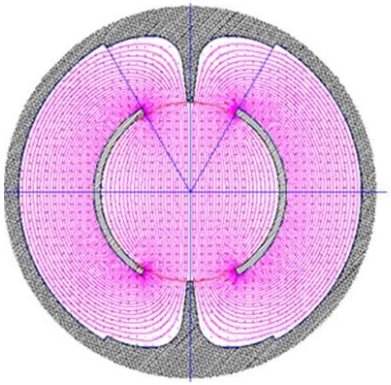

SLAC kicker features are:

- two matched tapered regions,
- grounded fenders, and
- kicker end HOM absorbers

Impedances for even and odd modes

Two matched tapered kicker ends: sizes chosen in these region is based on the HOM beam harmonic frequency

Issues for Train of Short Bunch:

The HOM absorber material must be chosen to improve power loading in the kicker structure:

- material resistivity,
- bake out, and
- heat emissivity

The kicker ends introduce the transverse kick and the longitudinal momentum into the passing bunch.

Advanced FEL Facilities with TEM-based Kickers

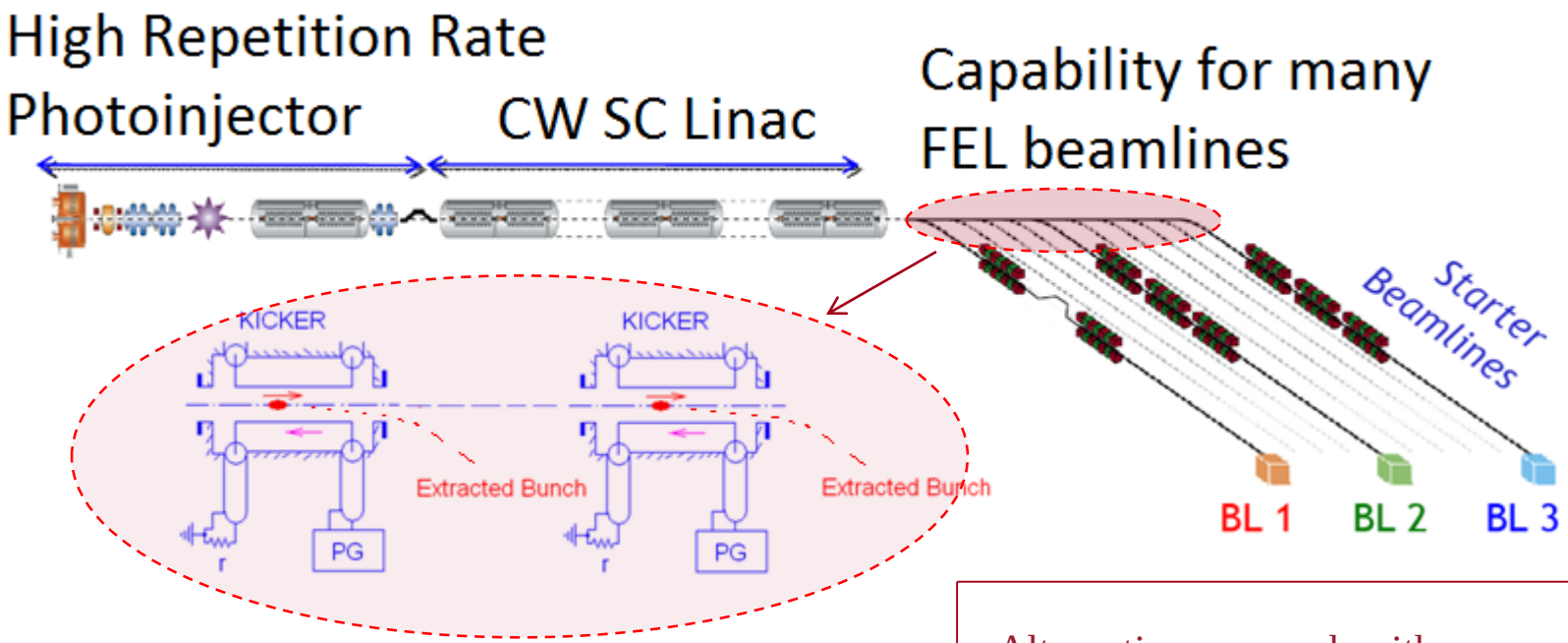

A TEM mode kicker system is an attractive concept for advanced FEL facilities due to **the ability to select individual bunches as needed.**

Alternative approach with an array of high-Q RF deflectors:

- Always ON (CW mode)
- **The same time bunch pattern in all beam lines**
- There will be beam transient effects in the SC linac if the special beam pattern is formed in the injector

TEM-based Kickers for Advanced Fast Bunch Orbit Control Systems (cont.)

U.S. Storage Ring Upgrades Injection/Extraction System in MBA Lattice

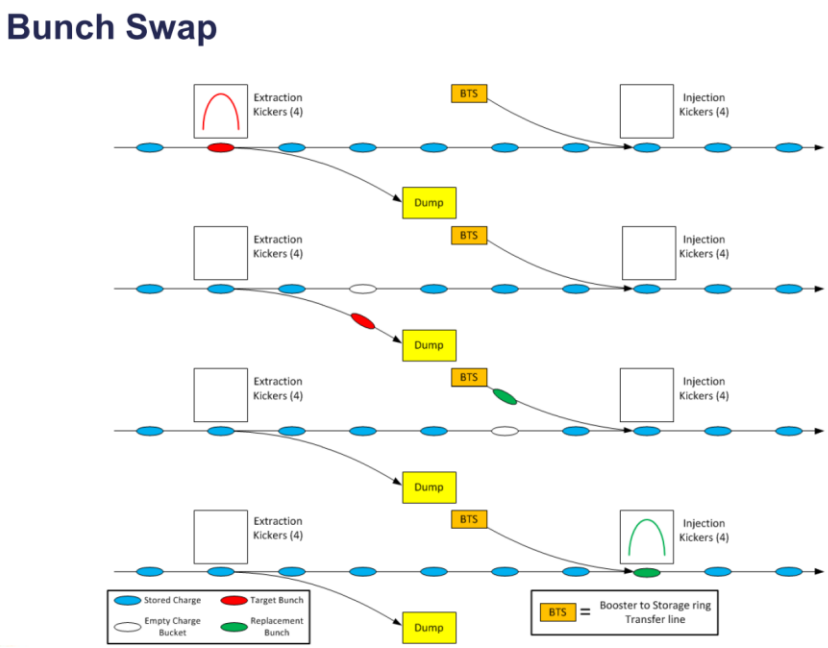

Courtesy Frank Lenkszus (APS)

LANL MaRIE Facility: pRad, XFEL, and eRad beams as radiographic tools

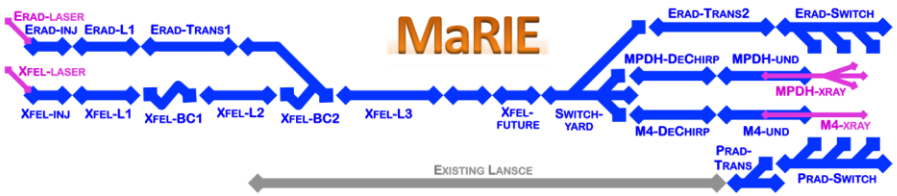

J. Bradley et.al, WEPWI001, IPAC2015, Richmond, VA, USA

The e-beams at the ends of the XFEL and eRad linacs are the 60 PPS trains of unevenly spaced bunches during a 100 usec pulse. To avoid unwonted effects, the MaRIE linac switch yard may contains the fast kicker system. The kicker **system allows to control bunches with arbitrary bunch pattern.**

LCLS-II Beamline Scenario for Pump-Probe Experiments

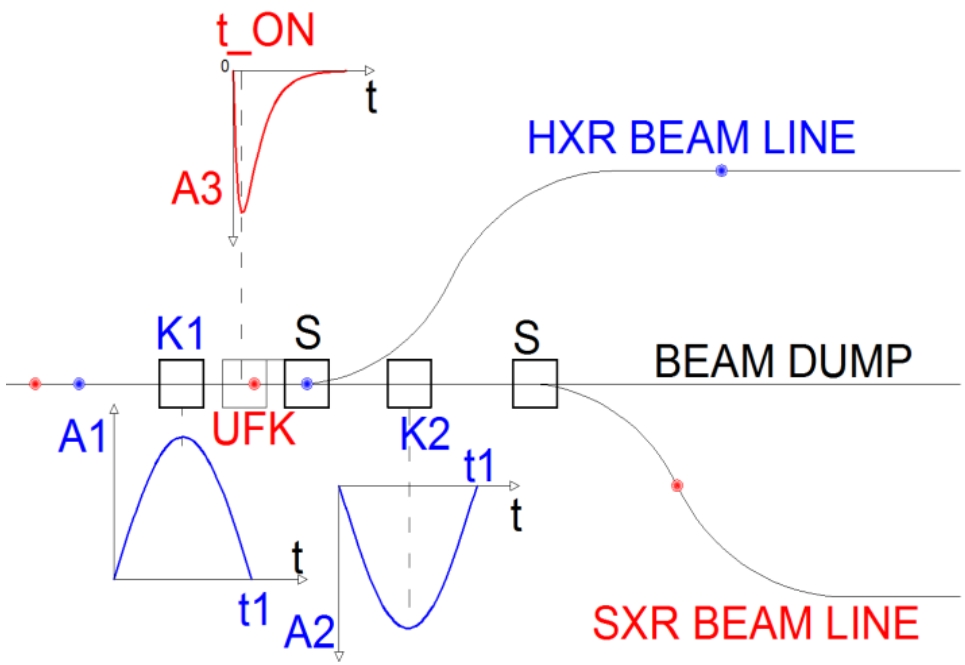

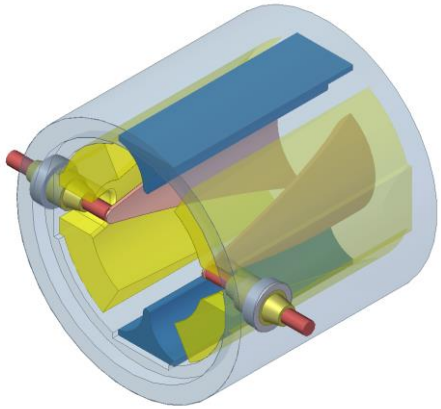

Parameter	Requirement	Unit
Deflection	0.75	mrad
Bunch Energy	4.0	GeV
Aperture	10	mm
Rise or/and Fall time	10.8 is good, 5.4 is better	nsec
Repeatability	100	ppm rms
Availability	Low	
Pre-pulse/Post-pulse	5	% of peak pulse
Residual field at the time of the next duplet	0.01 is good 0.02 I is manageable	G*m
Rate	10 (more is better 1 ok to start)	kHz

Bunches energy: 4 GeV (8 GeV)

K1 and K2 are "slow" kicker magnets:
ferrite-based, coated ceramic pipe, t1~ 1 usec

UFK is a "fast" TEM kicker (to cancel the "slow" kick)
Bunch separation: ~ 10 nsec

The resulting X-rays, of different color, would be recombined for pump-probe experiments

Alternative Mode Operation with a Fast OFF Pulse

UFK is ON beforehand (a “long” rise front)
UFK is OFF before the HXR bunch enters into it

A nsec fall time is needed to dump the transverse kick

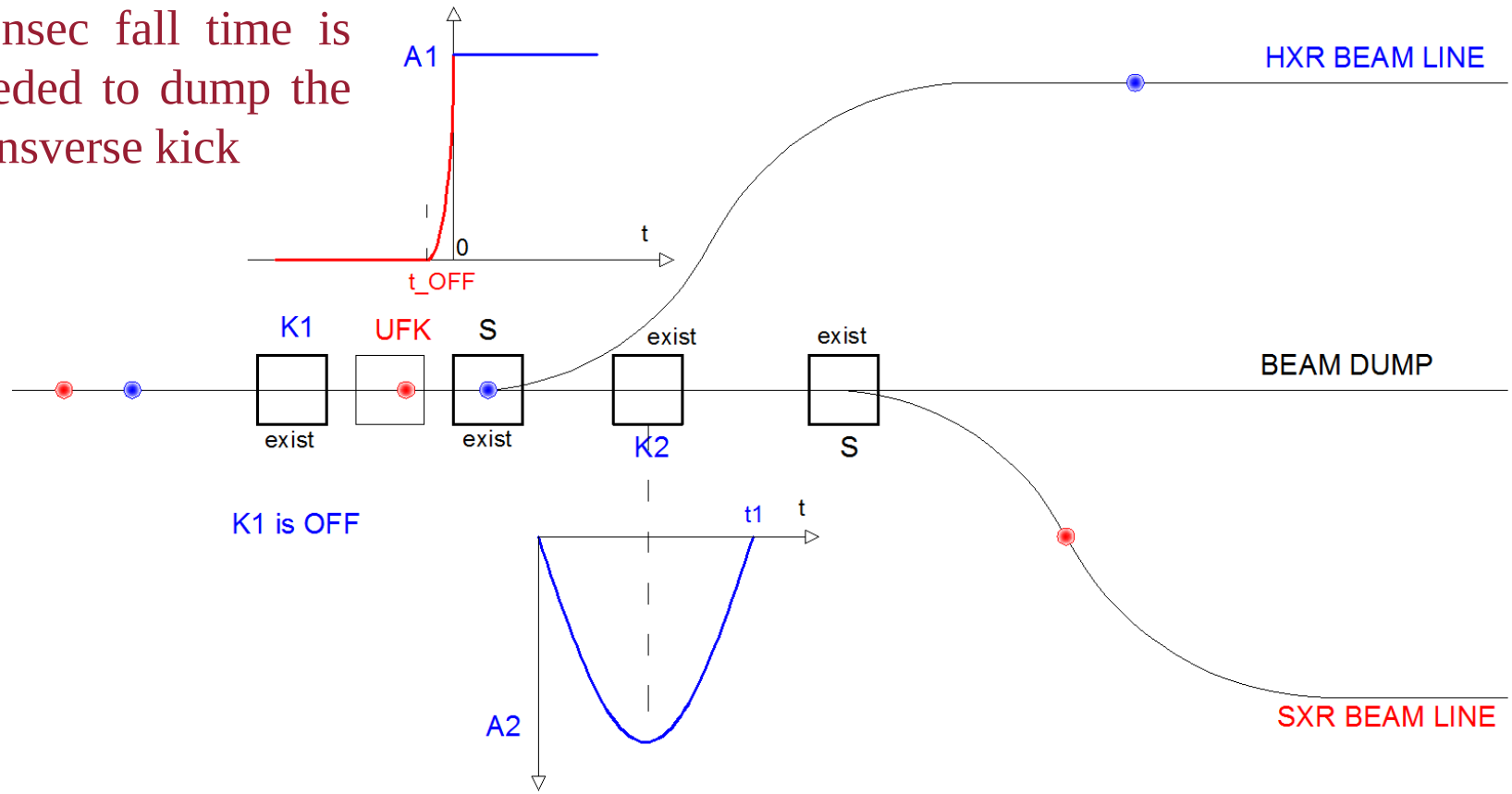

Roadmap with Fast OFF and ON Pulsers*

UFK1 is ON beforehand (a “long” rise front)
UFK1 is fast OFF before the HXR bunch enters into kicker structure
UFK2 is fast ON for HXR

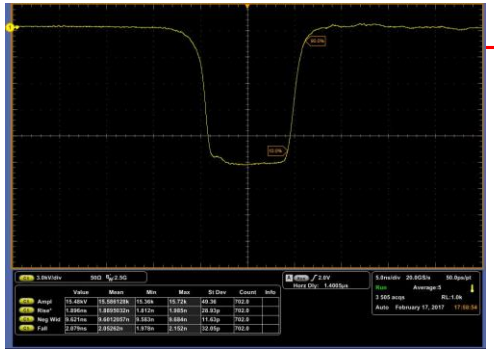

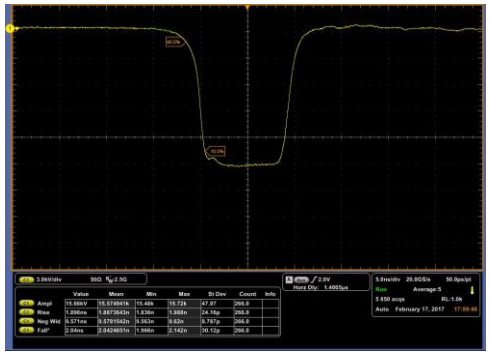

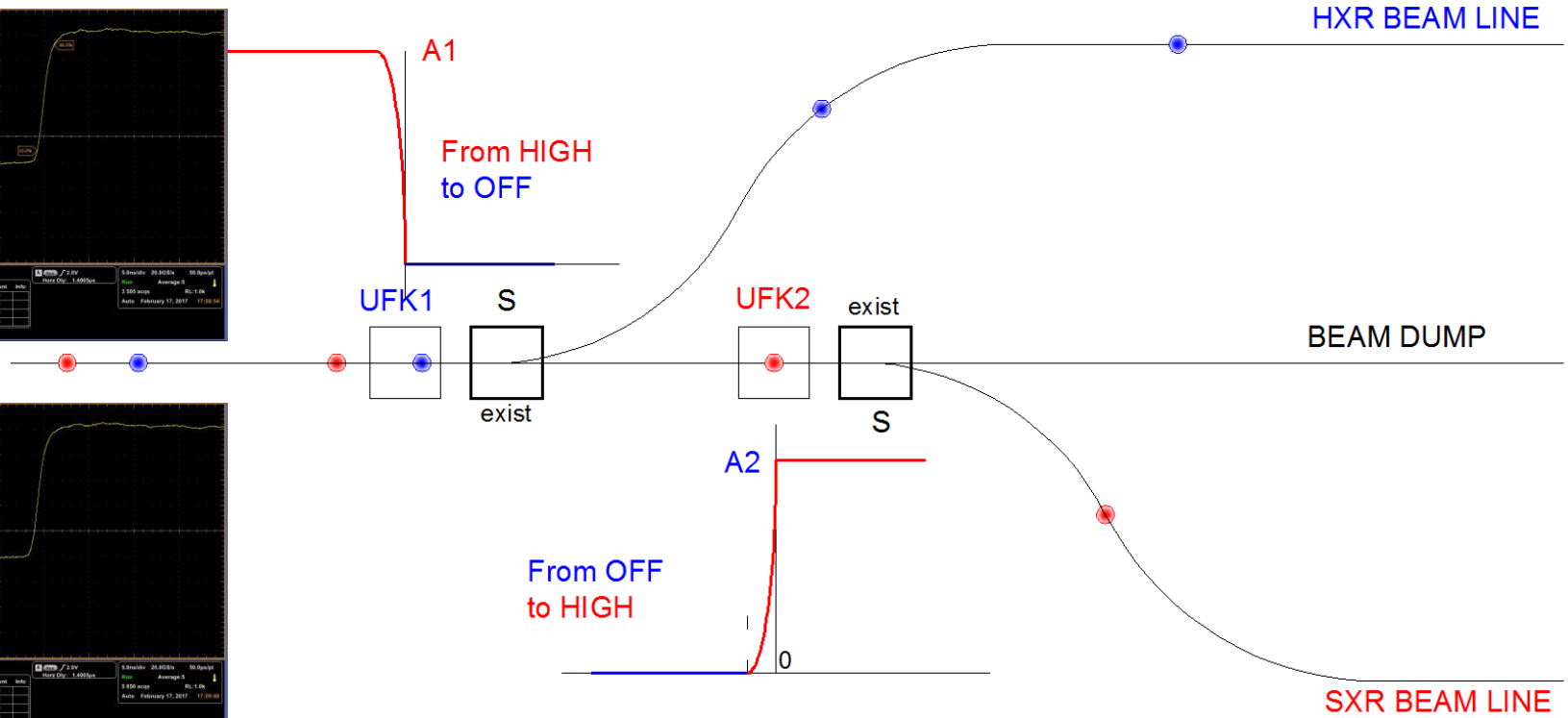

A MW rec shape nsec kick allows to control bunches with arbitrary bunch train pattern. There is a flexibility for the end FEL user.

Multi-MW Nanosecond Range Kicker Pulser Concepts

Potential engineering solutions of multi- MW nanosecond pulsers were broadly discussed in the frame of R&D activities for the ILC damping rings ten years ago.
[see Proc. The 2006 Cornell Workshop on the ILC DR R&D]

Workshop in this regard selected:

- inductive adder pulser concept (LNLL/SLAC),
- pulsers based on Drift Step Recovery Diodes (SLAC),
- commercial available pulsers from FID, Inc.,
- pulsers from Kentech, Inc.,
- pulsers from Behlke Inc.
- etc.

All solutions are still valid for discussed advanced Injection Systems.

Alternative Solutions*): To use a non-linear media to assist with switching speed. Magnetic Permeability and Conductance are common material parameters which can be used to "speed up" of a "slow" switch.

Shock wave formation in a ferromagnetic materials

Switching speed:

$$t_r \propto \frac{1}{H_{sw}}$$

Formation of a solid state plasma and fast ionization processes in Si-base materials

Switching speed:

$$t_r \propto \frac{d_{SCR}}{v_{sat}}$$

*) Revising the technology of the nsec MW pulse formation that was studied in 1960th (Shock Wave Mode) and in 1980th (Fast Switching Modes in Solid State Semiconductors)

Main Pulser Specifications for Advanced Fast Bunch Orbit Control Systems

- Multi- MW peak pulse power at 50 Ohm transmission line
- Wide nanosecond of FWHM (in 1 to 100 nsec range)
- Wide range of Rep Rates: (from a single pulse to 10+ MHz)
- Sub nsec rise/fall time (0.5 – 2 nsec)
- Absence of spurious pulses (a residual energy between pulses)
- A picosec jitter range against to the input trigger
- A long life time, a robustness, an immunity for a harsh environment

The R&D effort in the study of physics and engineering aspects of MW level nsec pulse formation is required from the system behavior point view.

Results of Bench Testing on Proof of Principle Circuit @ 60Hz

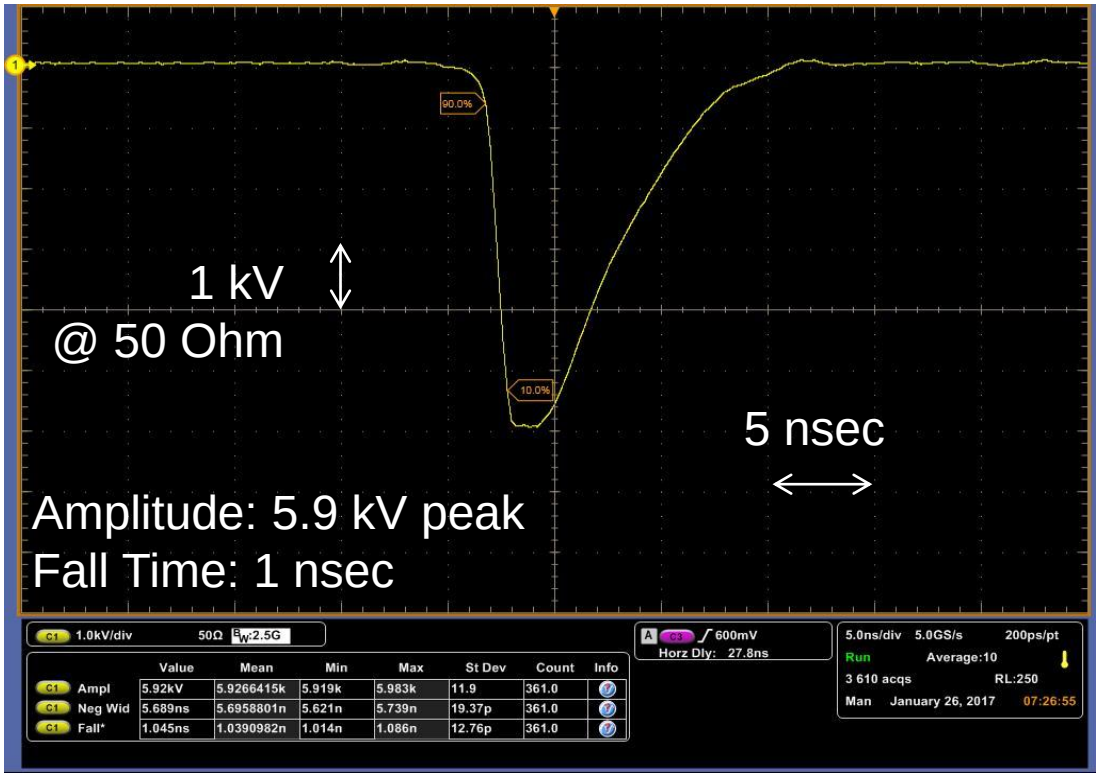

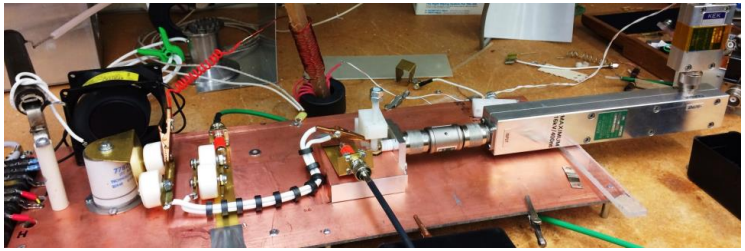

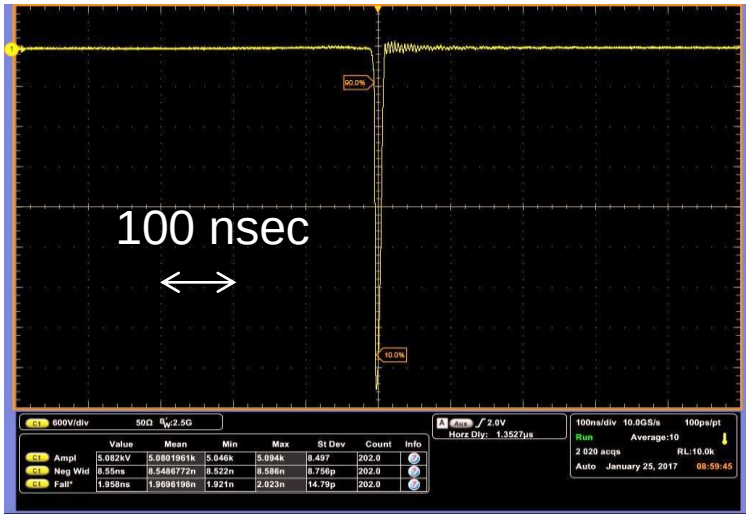

Primary switch is a gas-filled thyratron.

A drift step recovery diode assists the thyratron to obtain the switching di/dt~ 120 A/nsec

Total number of components is 6. All are available from the US vendors.

Most costly component is a HV broadband attenuator (~$10k).

Demonstrator #1: 6 kV peak, Fall=0.96 nsec

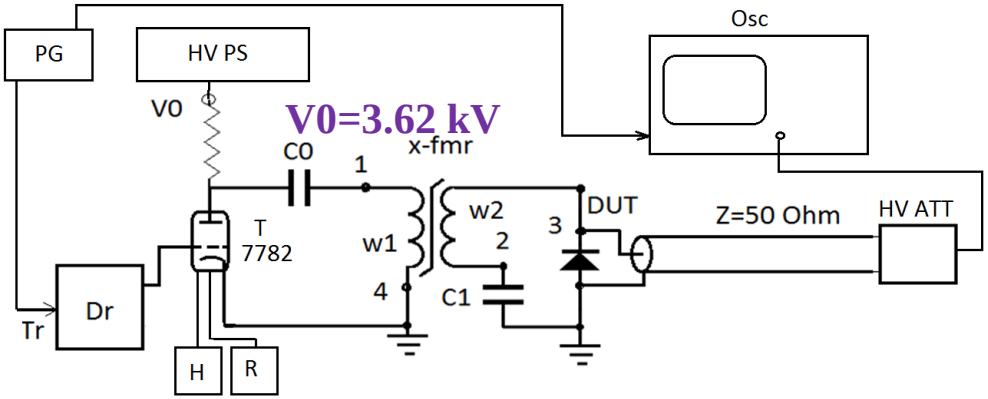

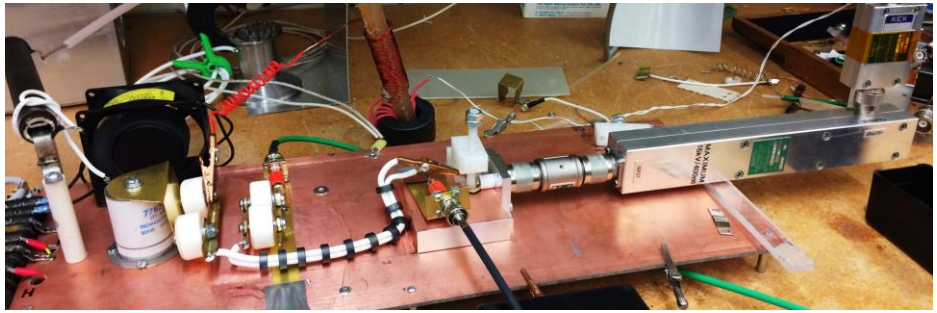

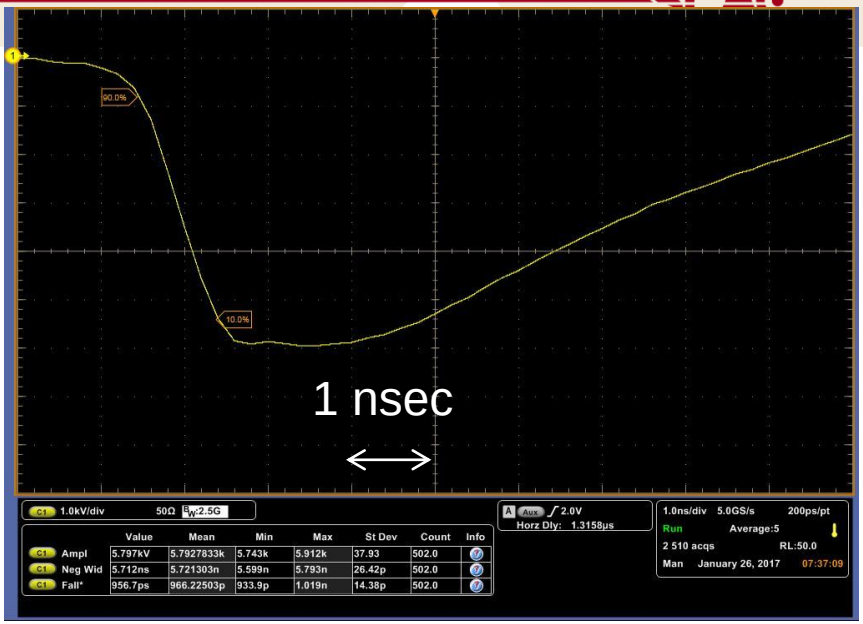

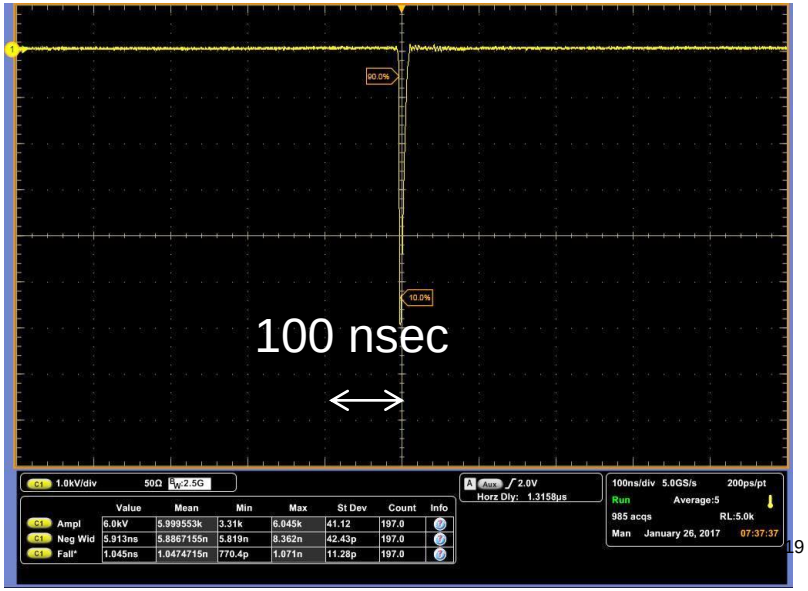

DSRD “pumping” mode: 1:1 x- fmr
FWD = 155 A peak (T/2=~80 nsec)
REV= 293 A peak
Feature: the pulser at Vo=3.6 kVDC produces almost Vout = 6 kV peak with the 1:1 x-fmr and no residuals

Demonstrator #2: 15.7 kV peak, FWHM=9.6nsec

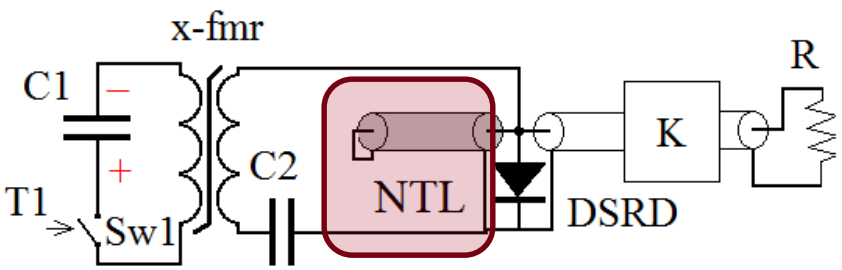

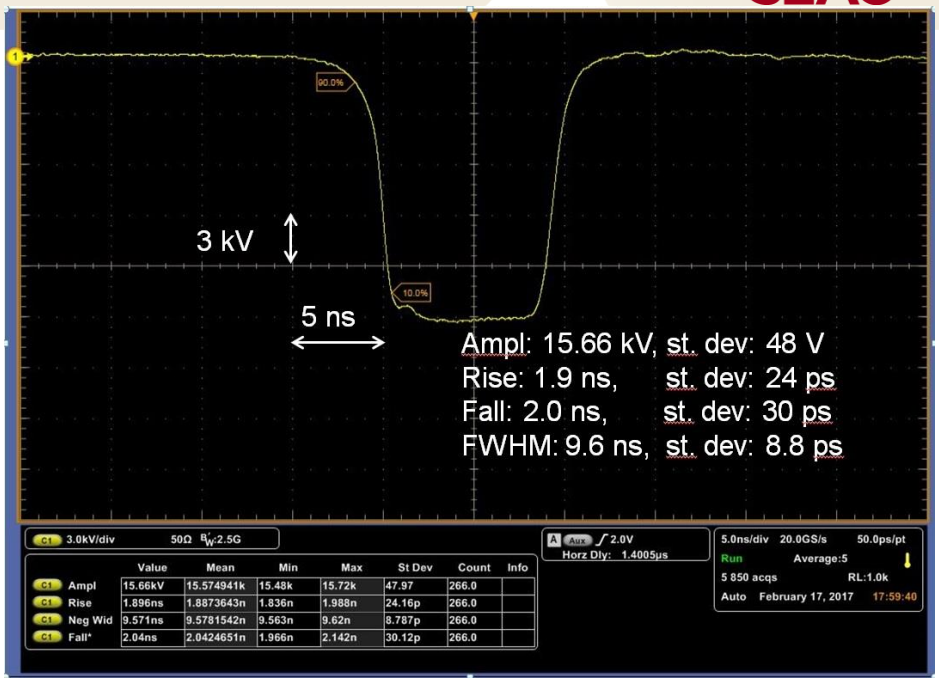

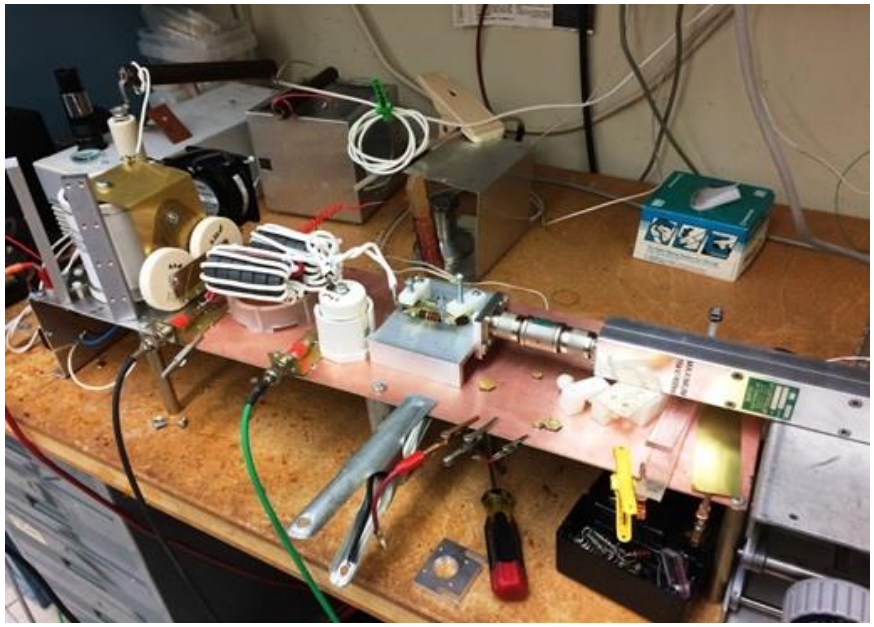

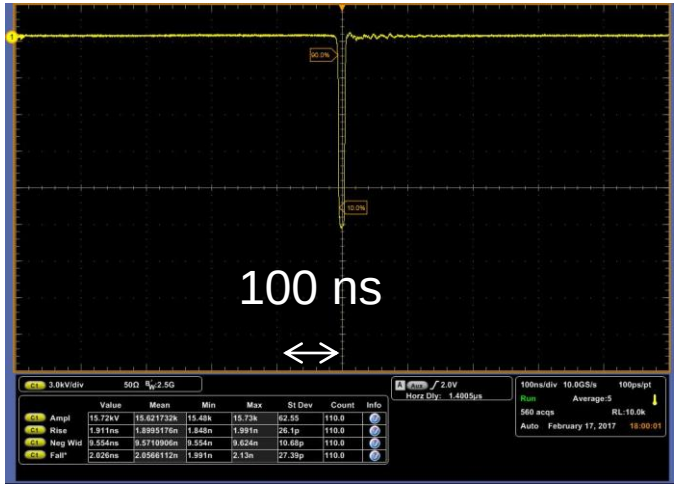

To show the movie of a 20 kV output (120 PPS)

R&D Short Range Plan

Kicker structure/performance:

- Design for pump-probe experiment, fabrication, cold test
- Test of the TEM-kicker performance at the SLAC LCLS beam dump BL

Kicker Pulser:

- High prepetition rate (1kHz, 10 kHz, 100 kHz …modes of operation)
- Stability of operation at high rep. rates
- Experiments show that no a special stabilization need in all used PSs (heater, reservoir, trigger, high voltage, AC etc.). We shall confirm this fact
- Thyratron vs. MOSFET Array as a primary switch. Comparison.
- Concepts of charging circuit vs. the output stability
- HV broadband loads and feed through
- Study the fast ionization switching mode in solid state material

Conclusion

- The distinctive features of the SLAC TEM-kicker structure are:
- When the bunch passes by the structure the less HOM power will be left
- The lengths and dimensions of the kicker components are not arbitrarily set. In an array with a traditional kicker requirements (an uniformity of the kick field, etc.) the kicker geometry is optimized based on the HOM beam harmonic spectrum.

- Our technology on Nanosecond Range Multi MW Pulsers for Advanced Fast Bunch Orbit Control Systems is based on a commercial available “slow” switch with an assistance of such processes as:
  - shock wave formation in ferromagnetic,
  - solid state plasma erosion in semiconductors, and
  - fast ionization processes in Si-base materials.

A particular application of immediate research is a kicker for LCLS-II for pump-probe experiments.

Our R&D results show that the proposed approach is attractive, promising, and a cost effective solution.

Looking for a collaboration with other institutions who are interesting in this technology and concepts

Related to our SLAC Publications

SLAC Pub ID	Workshop/Conference	When	Where
SLAC-WP-077	ILC DR R&D	2007	Cornell
SLAC-WP-081	European Pulse Power	2009	CERN
SLAC-WP-096	Mini Kicker Workshop	2014	ANL
SLAC-WP-130	IPAC2016	2016	Busan, Korea
WEB03	FEL2017	2017	Santa Fe, NM

See also:

- SLAC-PUB-15098,
- SLAC-PUB-13477,
- SLAC-PUB-16481, and
- SLAC-PUB-17099 for details

Acknowledgement

Thank my colleagues, co-authors of our publications.

Work supported by US Department of Energy
contract DE-AC02-76SF00515

Thank you for your attentions!