Status of n1 calculations

A. Langner

European Organization for Nuclear Research (CERN)

FCC Collimation meeting, 05.05.2017

n1 calculation

Input

	Injection	Collision
Radial closed orbit excursion	4 mm	2 mm
β-beating (%)	10	20
Momentum offset	6×10^{-4}	2×10^{-4}
Relative parasitic dispersion	0.14	0.1

+ aperture tolerances from LHC Project Report 1007

Minimum aperture goal

FCC-hh

TCP	7.2
TCS	9.7
TCDQ	11.4
TCT	13.7
min. aperture	15.5

taken from M. Fiascaris
(FCC Collimation meeting 14/10/16)

Aperture tolerances

- Horizontal, vertical and radial component
- Assumes worst case of linear addition
- Accounts for
  - dynamic movements
  - survey errors
  - tunnel movements
  - cryostat assembly

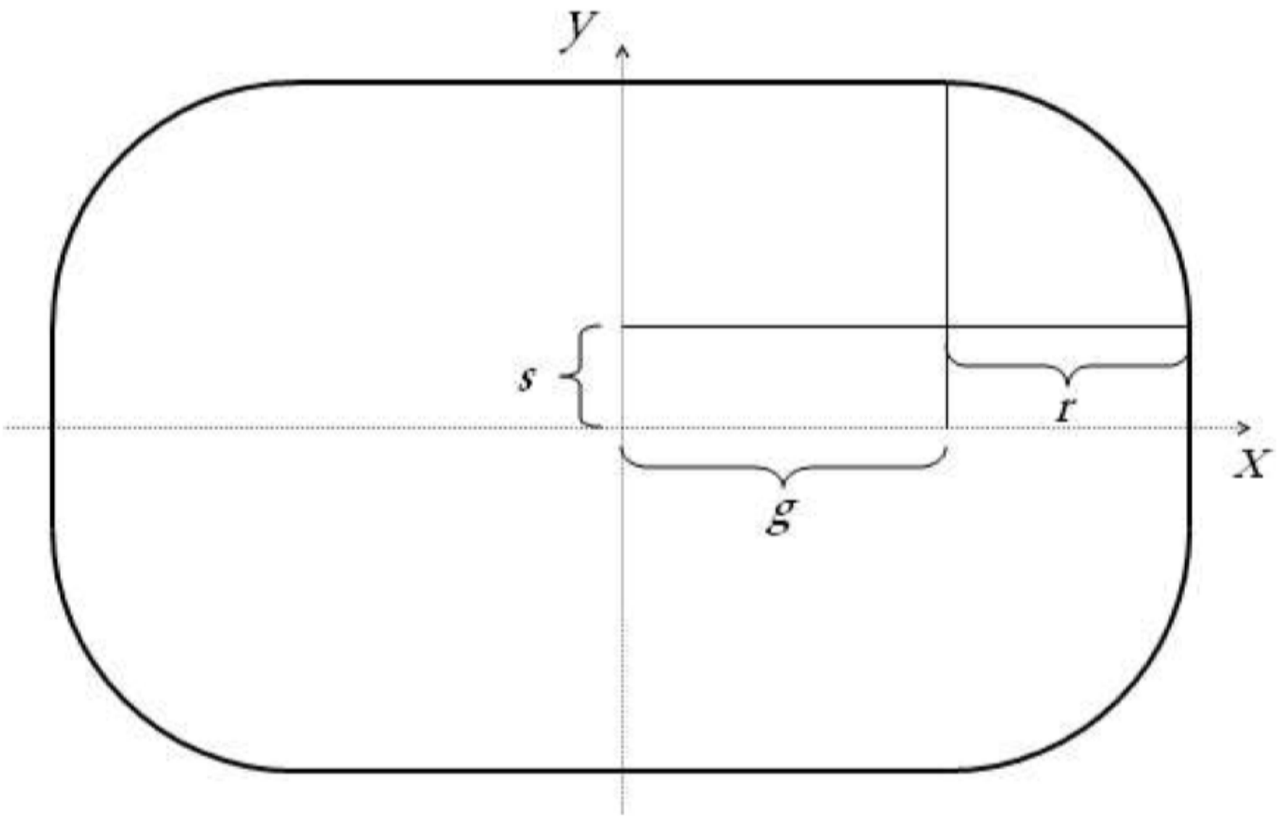

Figure 22.1: Definition of aperture tolerances

E.g.:
MB: g=1.1mm, s=0mm and r=1.65mm
MQ: g= 0.9mm, s=0mm and r=1.14mm

Does not account for beam screen alignment tolerance

Collision energy

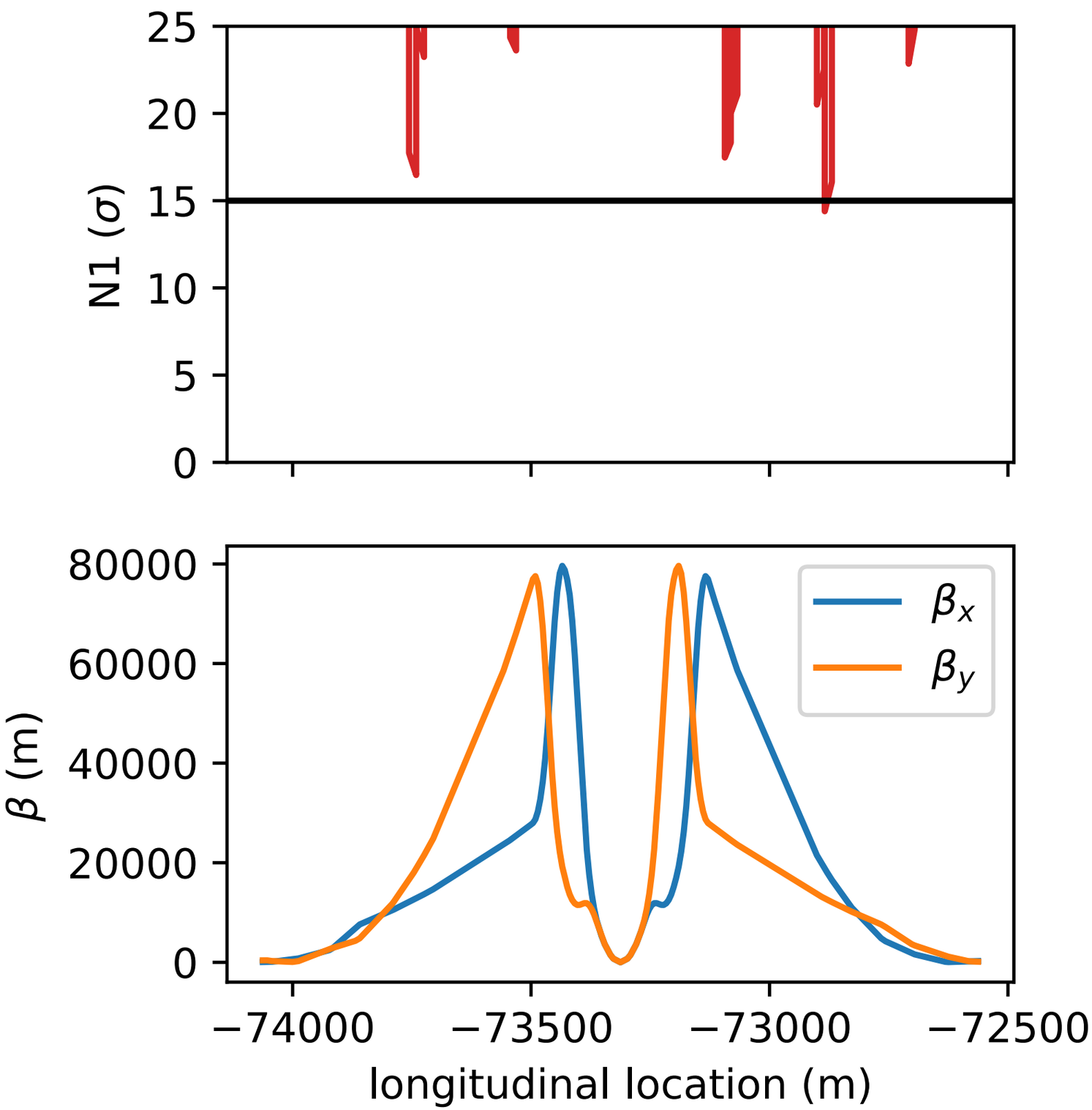

- Bottleneck as expected in IRA/G
- Minimum at MBRD.B4RA.H1 with n1 = 14.4 σ
- Triplet above 15 σ

ARC (injection)

Missing definitions:

Aperture:

none

Tolerances:

NAME	Freq.
MQS	1392

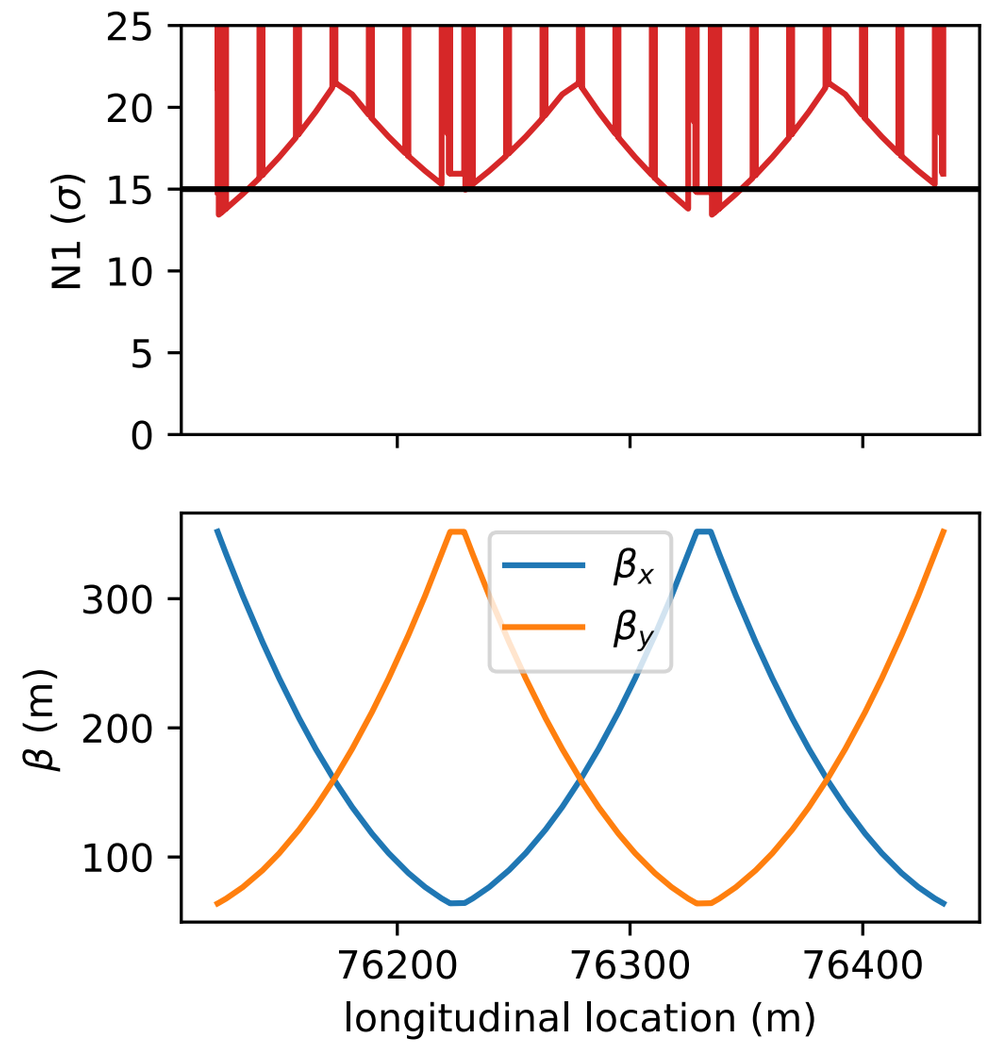

N1	NAME
13.41242063	MS.15RA.H1
13.41927773	MS.15LL.H1
13.4236281	MS.17LL.H1
13.42875052	MS.23LL.H1
13.43157666	MS.23RA.H1
13.43214854	MS.18RL.H1

n1 = 13.4 in the arc

DIS (injection)

Missing definitions:

Aperture:

NAME	Freq.
MQM	4

Tolerances:

NAME	Freq.
MQM	4

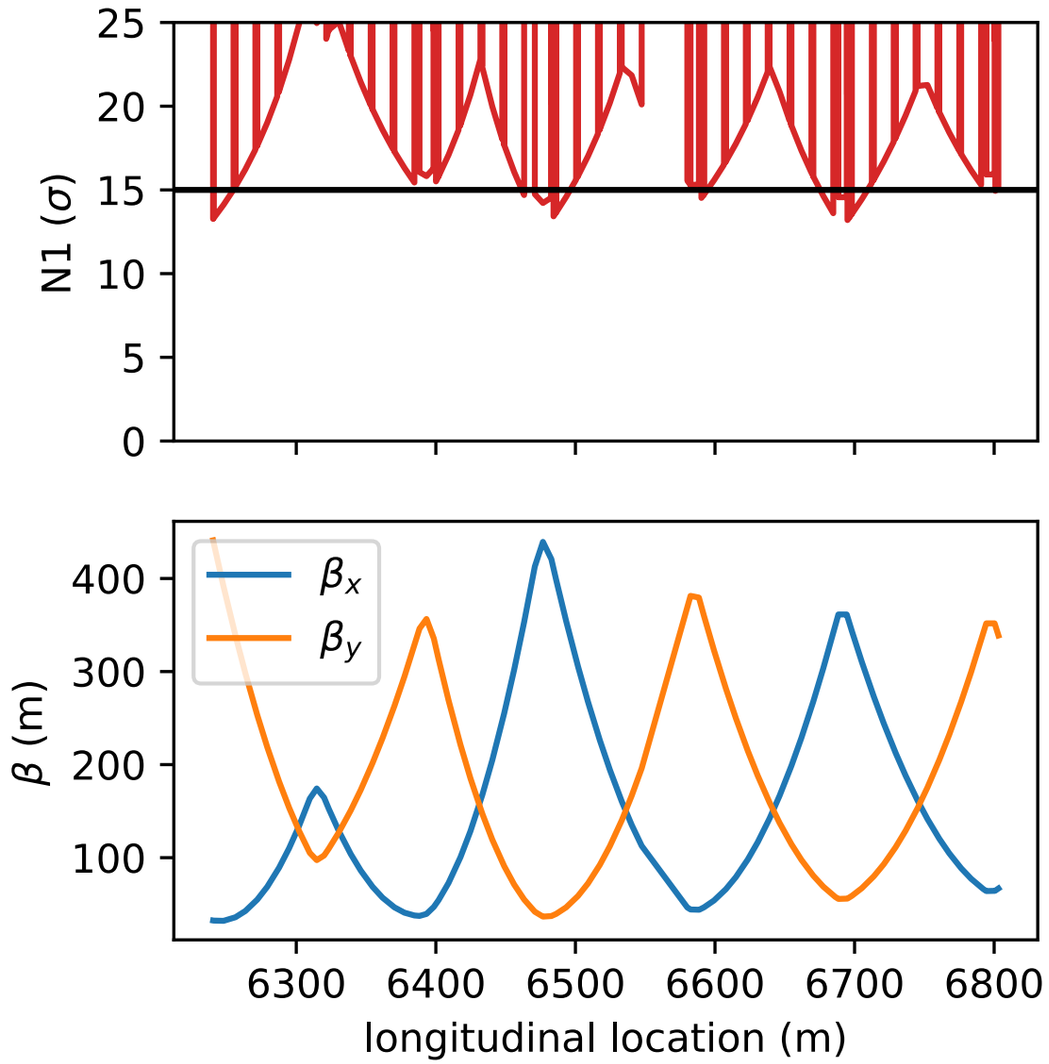

N1	NAME
12.00536667	MCBH.10RL.H1
12.04135192	MB.A11LJ.H1
12.09467109	MCBH.10RL.H1
12.16037974	MCS.A11RL.H1
12.17144926	MCS.A11RL.H1
12.19352328	MB.A11RL.H1

lower n1 in the dispersion suppressor region

A - Main Exp. (injection)

Missing definitions:

Aperture:

NAME	Freq.
MCBxx	16
MCQxx	4

Tolerances:

NAME	Freq.
MCBxx	16
MCQxx	4
TAS	4

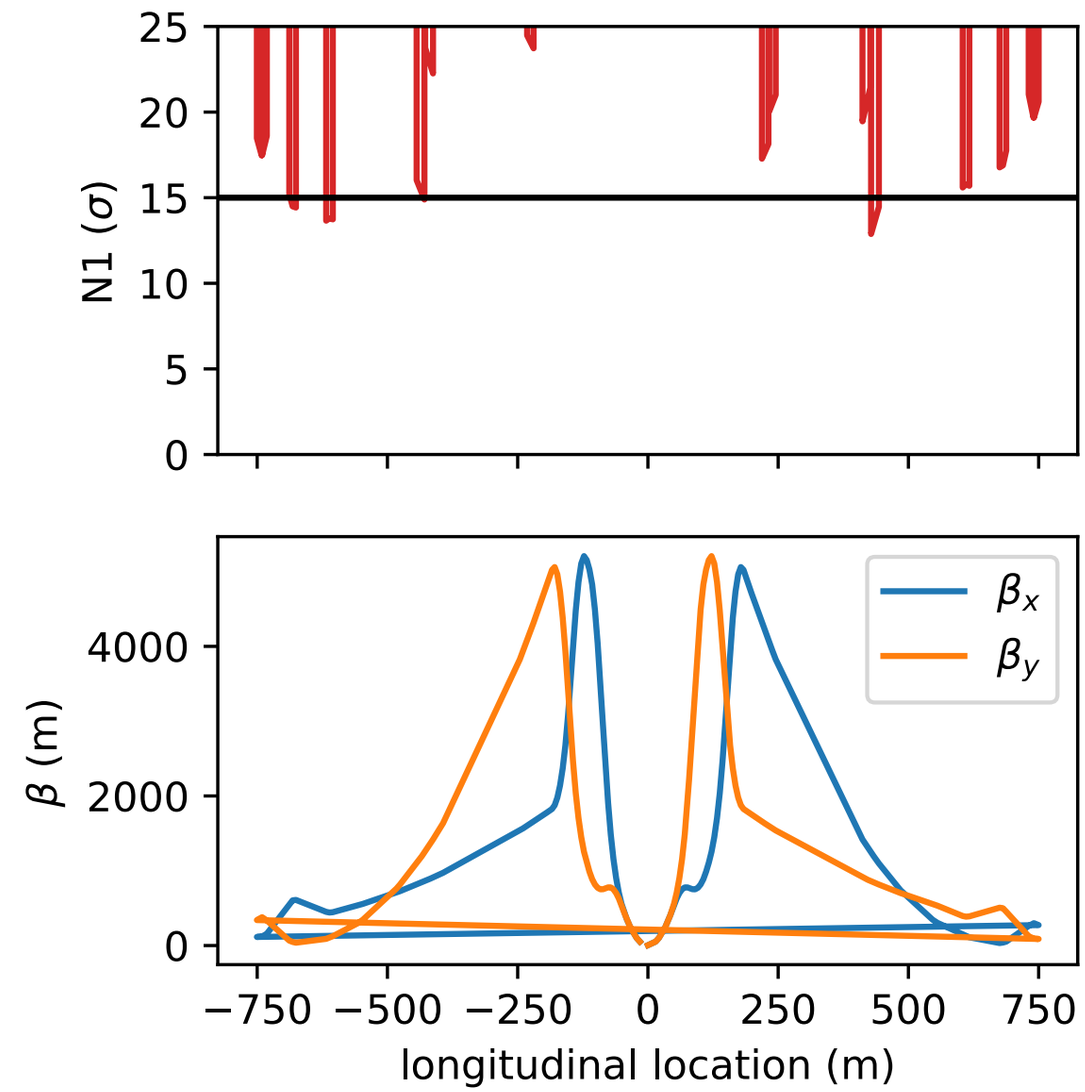

N1	NAME
12.87921004	MBRD.B4RA.H1
13.38818588	MBRD.B4RA.H1
13.65633946	MQYL.5LA.H1
13.732938	MQYL.5LA.H1
13.79962292	MQYL.5LA.H1
13.91751182	MBRD.B4RA.H1

B - Side Exp. (injection)

Missing definitions:

Aperture:

NAME	Freq.
MCBxx	12
MKIA	1
MKIE	1
MQXB	2
TDI	1

Tolerances:

NAME	Freq.
MBRD	16
MBXA	12
MCBxx	12
MKI	114
MKIA	1
MKIE	1
MQI	8
MQM	2
MQMI	2
MQML	3
MQXA	20
MQXB	8
MQYI	2
MQYL	3
MQYY	2
MSI	114
TDI	1

will be updated soon

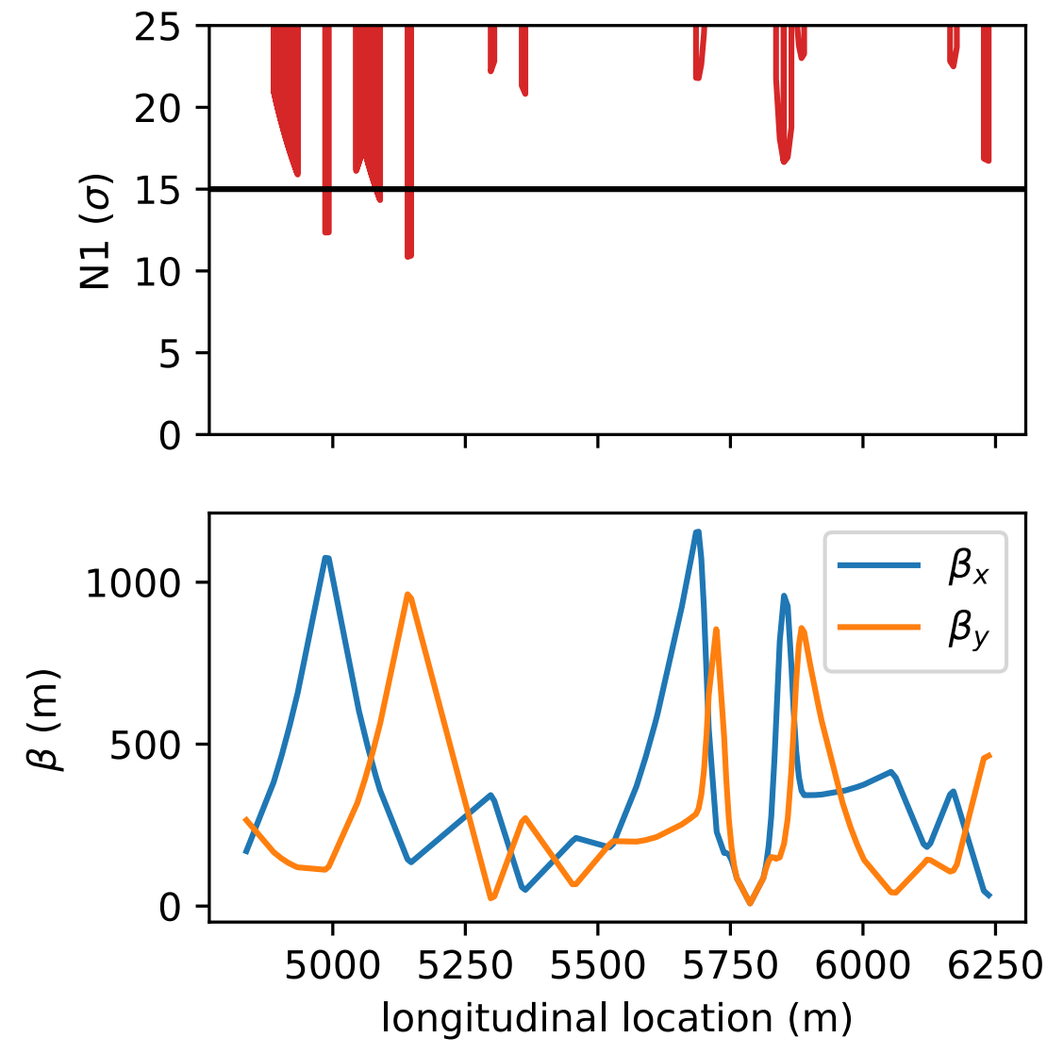

N1	NAME
10.85802388	MQI.6LB.H1
10.93451596	MQI.6LB.H1
12.34614316	MQI.7LB.H1
12.3554523	MQI.7LB.H1
14.32763552	MKI
14.37107914	MKI

D - Extraction (injection)

Missing definitions:

Aperture:

NAME	Freq.
MQE	2
MQI	2
MQM	5

Tolerances:

NAME	Freq.
MQE	2
MQI	2
MQM	5

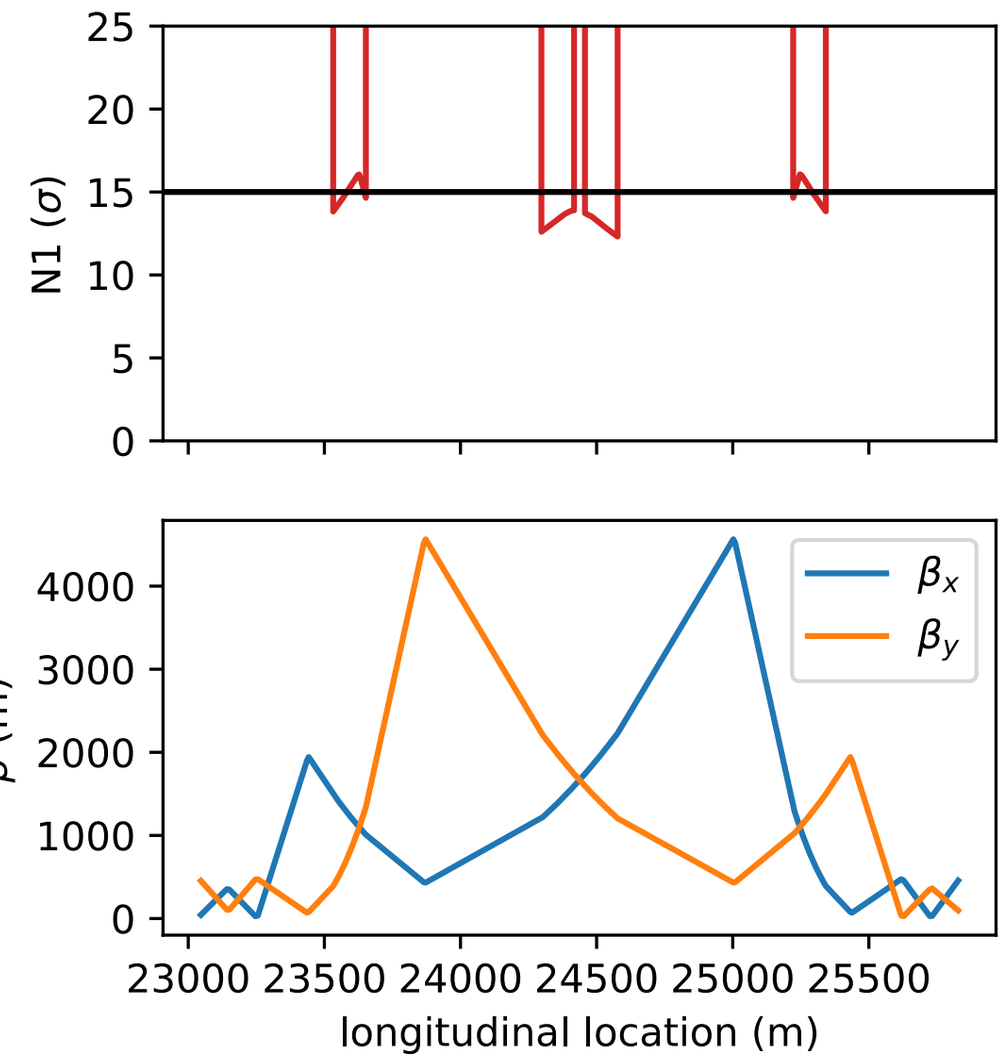

N1	NAME
12.31025147	MBSD.3RD.H1
12.37288721	MBSD.3RD.H1
12.43225698	MBSD.3RD.H1
12.49207145	MBSD.3RD.H1
12.55237404	MBSD.3RD.H1
12.60096288	MBSD.3LD.H1

Kicker + Septa aperture need a slight increase

F - Momentum Collimation (injection)

Missing definitions:

Aperture:

NAME	Freq.
MBA	4
MBB	4
MBWM	12
MQM	3
MQTL	12
MQWC	20
MQWD	4
TCHSH	1
TCSM	4

Tolerances:

NAME	Freq.
BTVM	1
MBA	4
MBB	4
MBWM	12
MQM	3
MQTL	12
MQWC	20
MQWD	4

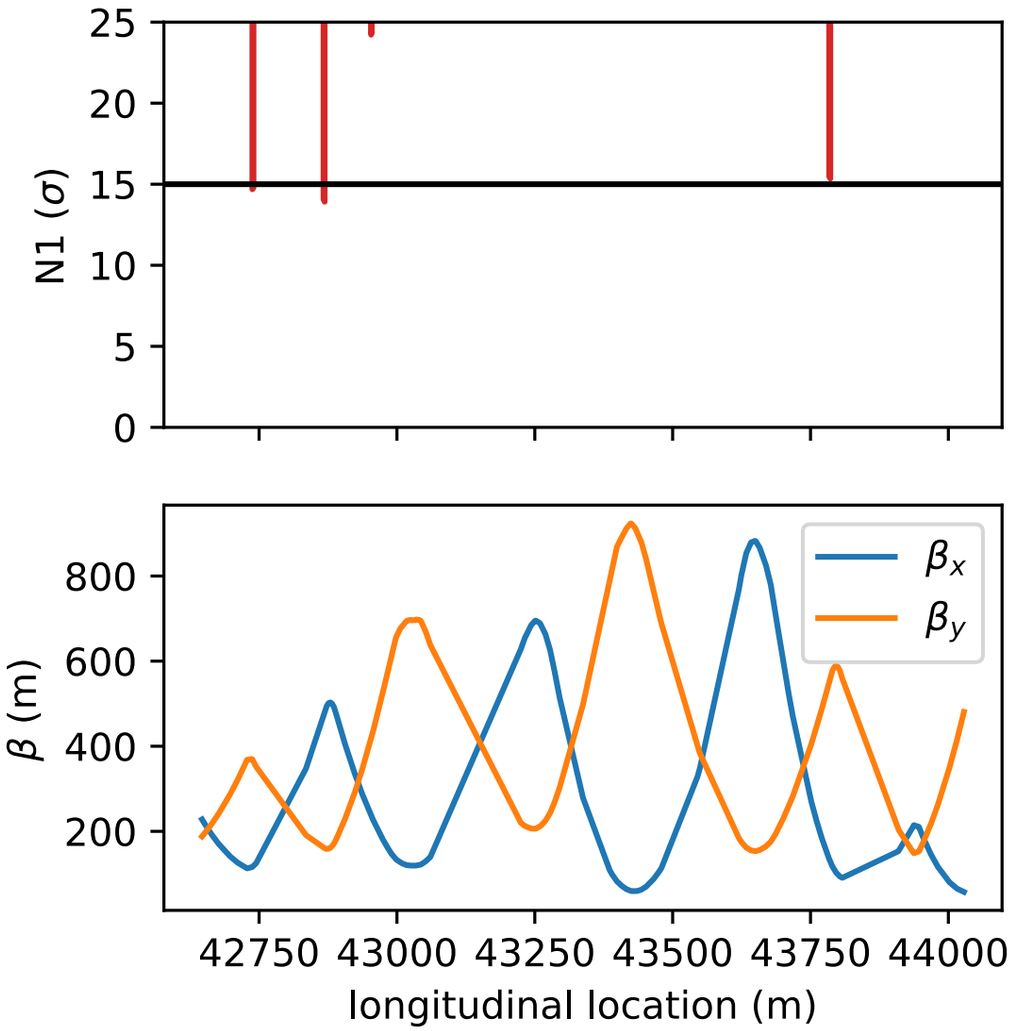

N1	NAME
13.91950749	MCBCH.6L3.B1
14.07754524	MCBCH.6L3.B1
14.68787935	MCBCV.7L3.B1
14.79429591	MCBCV.7L3.B1
15.34568741	MCBCV.6R3.B1
15.48953056	MCBCV.6R3.B1

G - Main Exp. (injection)

Missing definitions:

Aperture:

NAME	Freq.
MCBxx	16
MCQxx	4

Tolerances:

NAME	Freq.
MCBxx	16
MCQxx	4
TAS	4

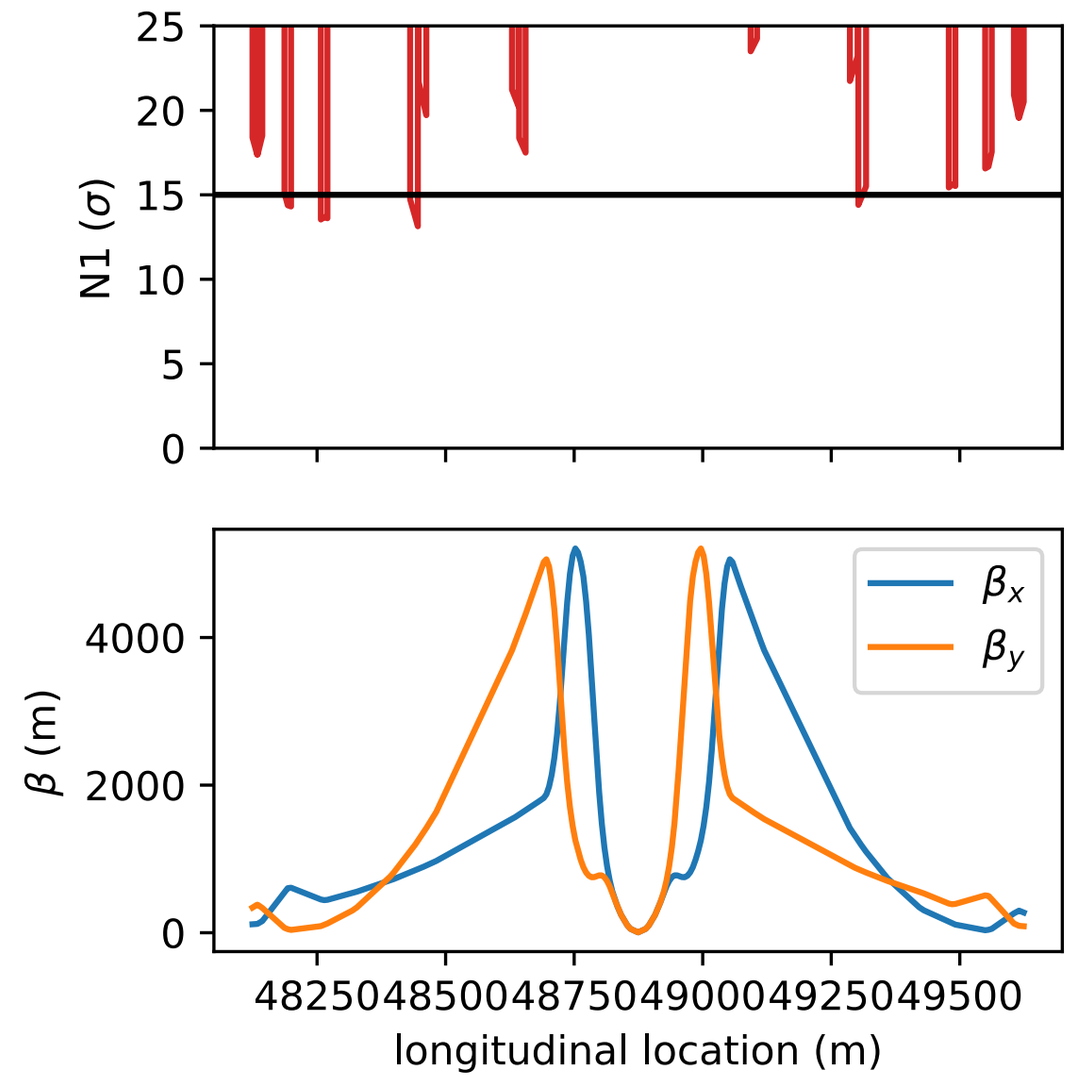

N1	NAME
13.13641618	MBRD.B4LG.H
13.53707572	MQYL.5LG.H1
13.61230424	MQYL.5LG.H1
13.64601289	MBRD.B4LG.H
13.6796606	MQYL.5LG.H1
14.17576015	MBRD.B4LG.H

H - RF (injection)

Missing definitions:

Aperture:

NAME	Freq.
MBA	4
MBB	4
MQM	7

Tolerances:

NAME	Freq.
MBA	4
MBB	4
MQM	7

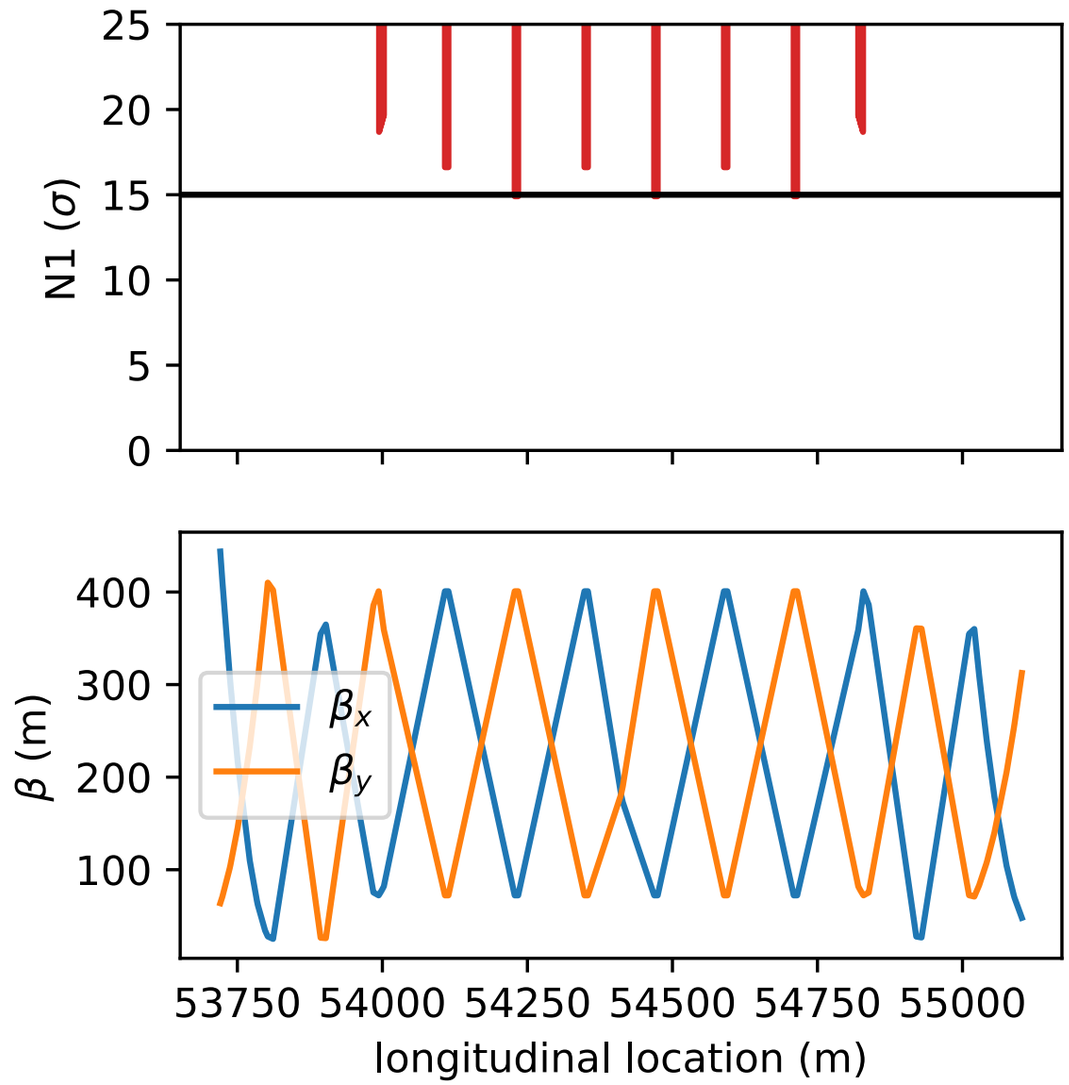

N1	NAME
14.90966904	MQ.B1.H.H1
14.90966904	MQ.F1.H.H1
14.90966906	MQ.B1.H.H1
14.90966906	MQ.F1.H.H1
14.90966929	MQ.D1.H.H1
14.90966931	MQ.D1.H.H1

J - Betatron Collimation (injection)

Missing definitions:

Aperture:

NAME	Freq.
MQB	2
MQM	5

Tolerances:

NAME	Freq.
MQB	2
MQM	5

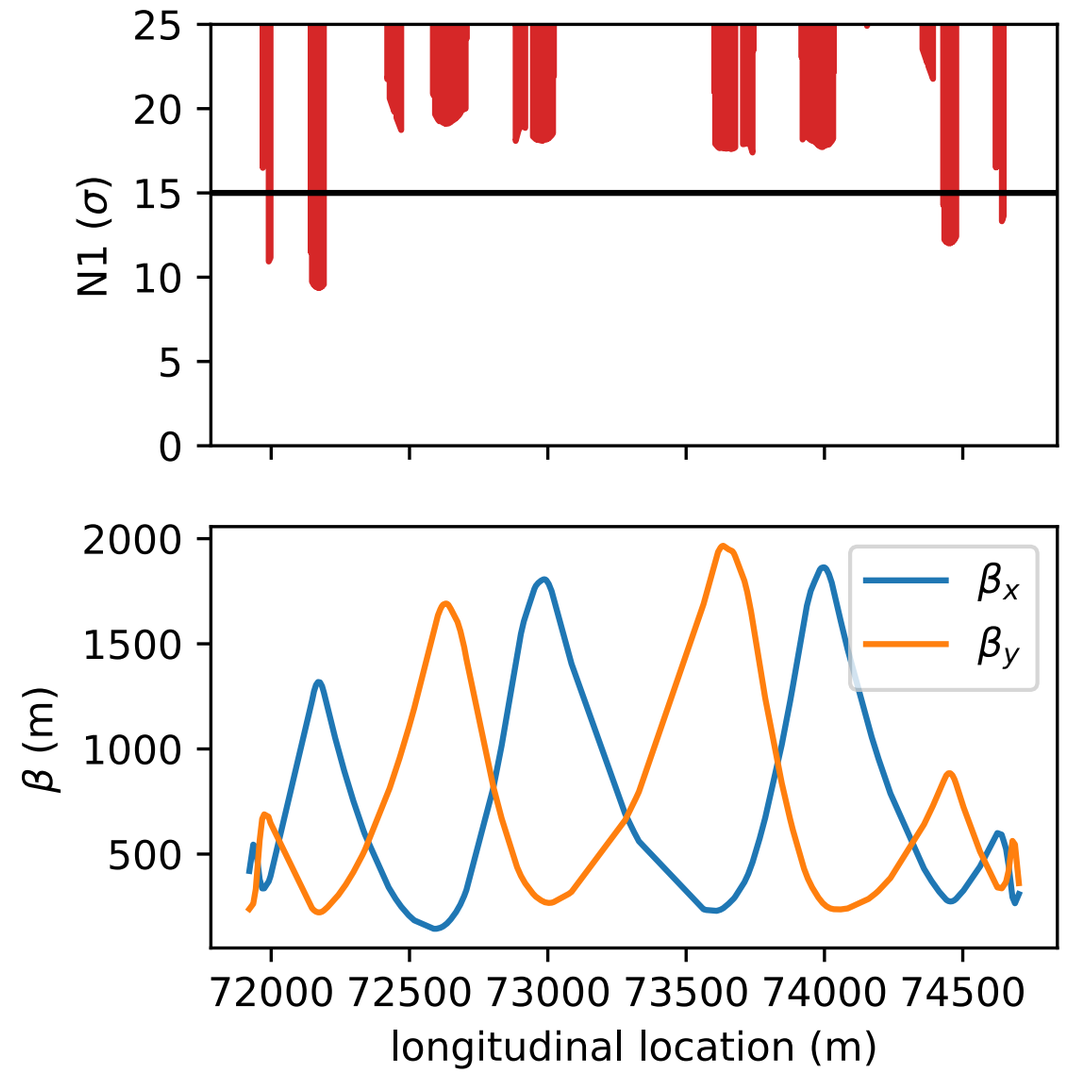

N1	NAME
9.378292756	MQTLH.C6L2.B1
9.38109971	MQTLH.D6L2.B1
9.381701881	MQTLH.C6L2.B1
9.385347537	MQTLH.B6L2.B1
9.431816924	MQTLH.D6L2.B1
9.441139857	MQTLH.E6L2.B1

L - Side Exp. (injection)

Missing definitions:

Aperture:

NAME	Freq.
MCBxx	12
MKIA	1
MKIE	1
TDI	1

Tolerances:

NAME	Freq.
MBRD	16
MBXA	12
MCBxx	12
MKI	114
MKIA	1
MKIE	1
MQI	8
MQM	2
MQMI	2
MQML	3
MQXA	20
MQXB	12
MQYI	2
MQYL	3
MQYY	2
MSI	114
TDI	1

will be updated soon

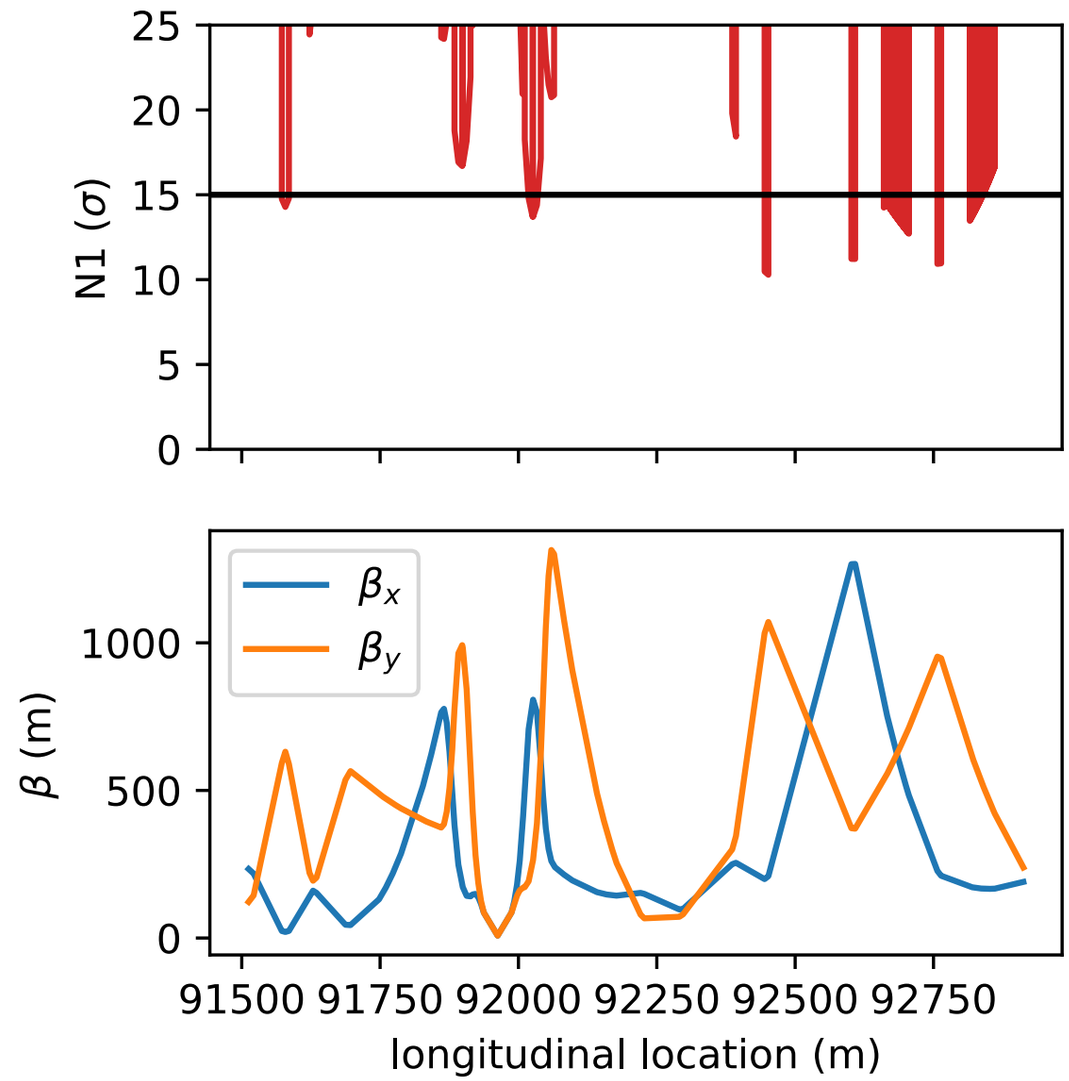

N1	NAME
10.28661848	MQI.5RL.H1
10.48037939	MQI.5RL.H1
10.92653136	MQI.7RL.H1
10.95923183	MQI.7RL.H1
11.21771618	MQI.6RL.H1
11.2223823	MQI.6RL.H1

Beam Screen geometry

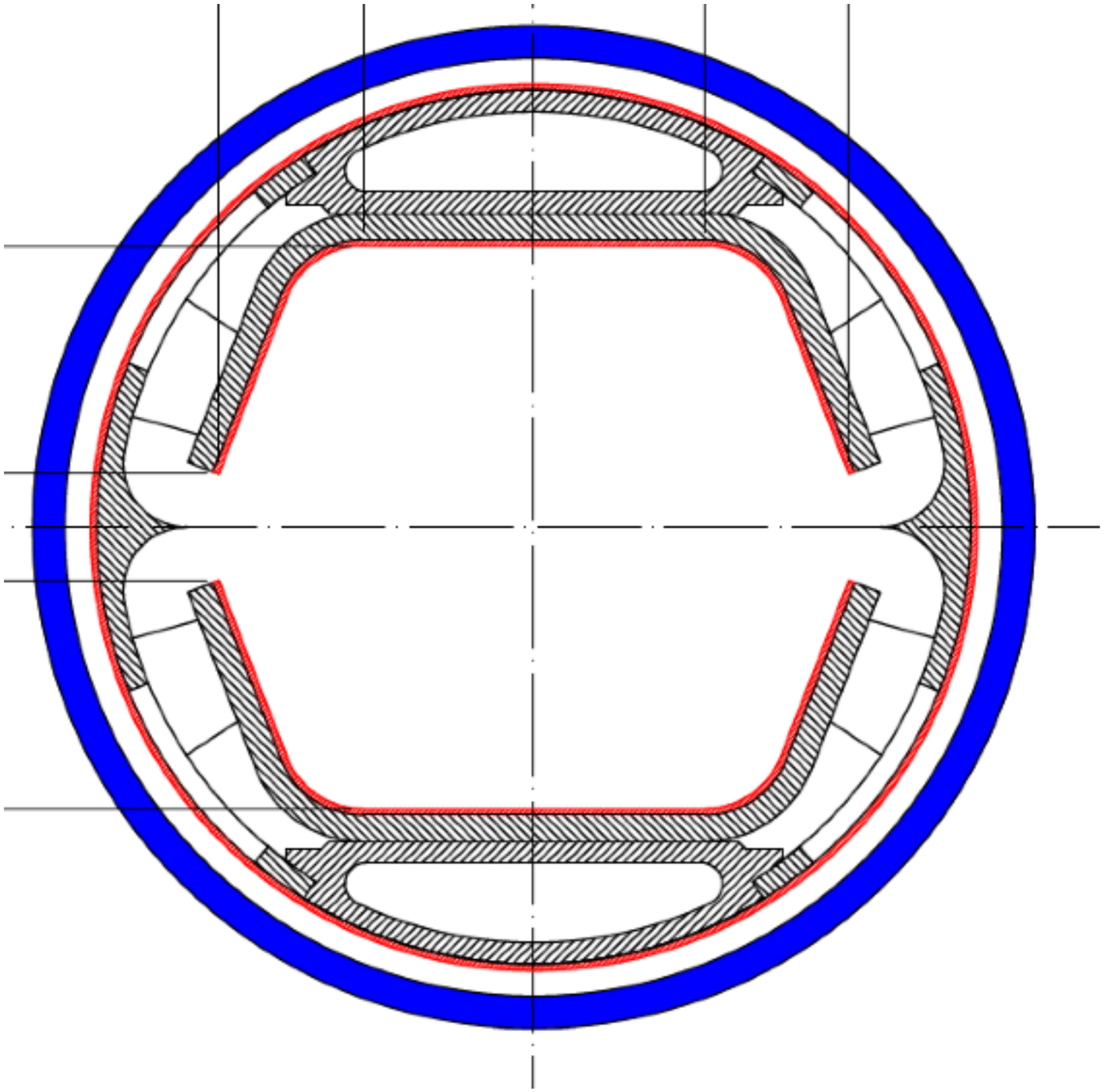

Rectellipse

Beam Screen geometry

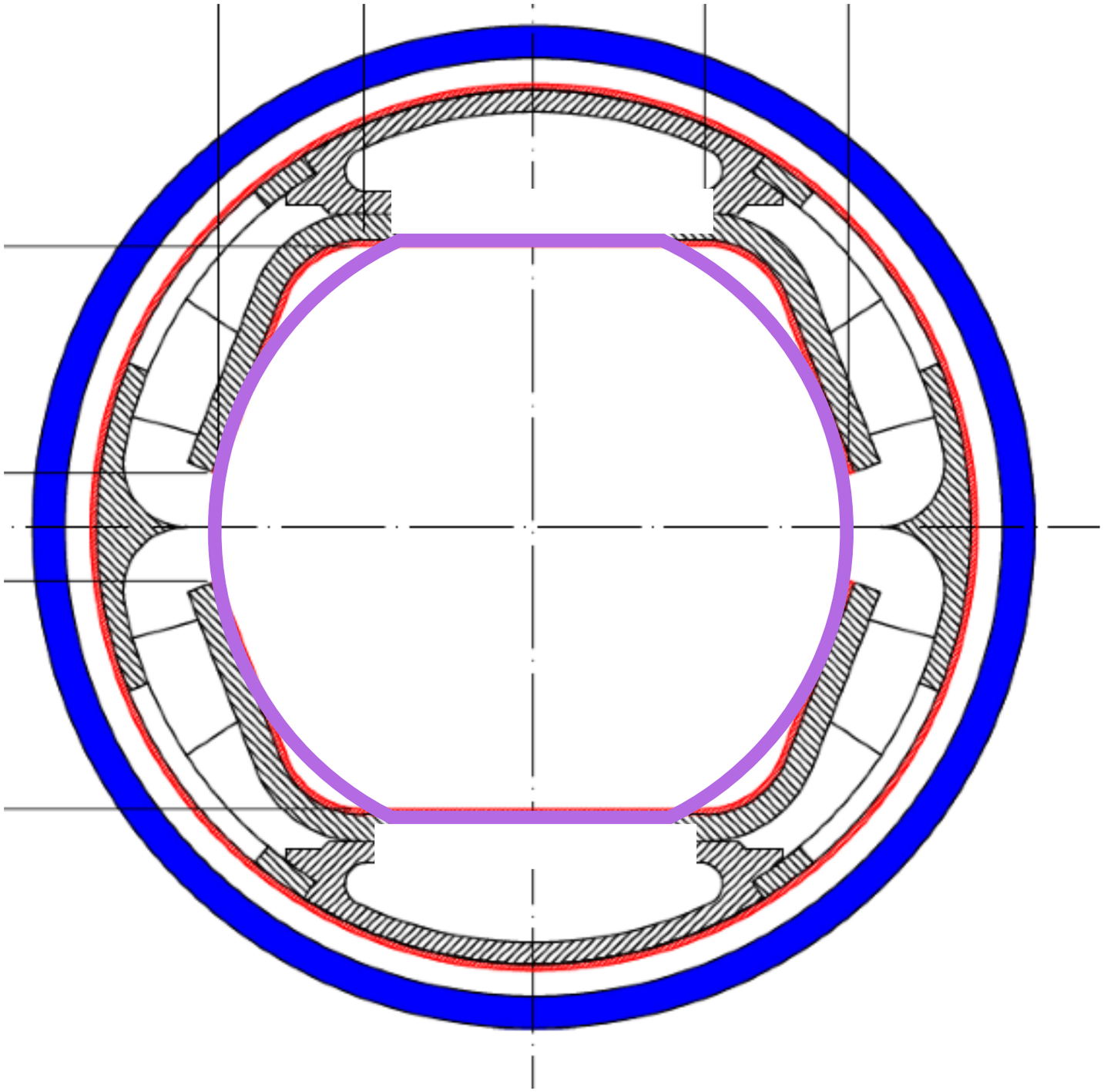

Rectellipse

Beam Screen geometry

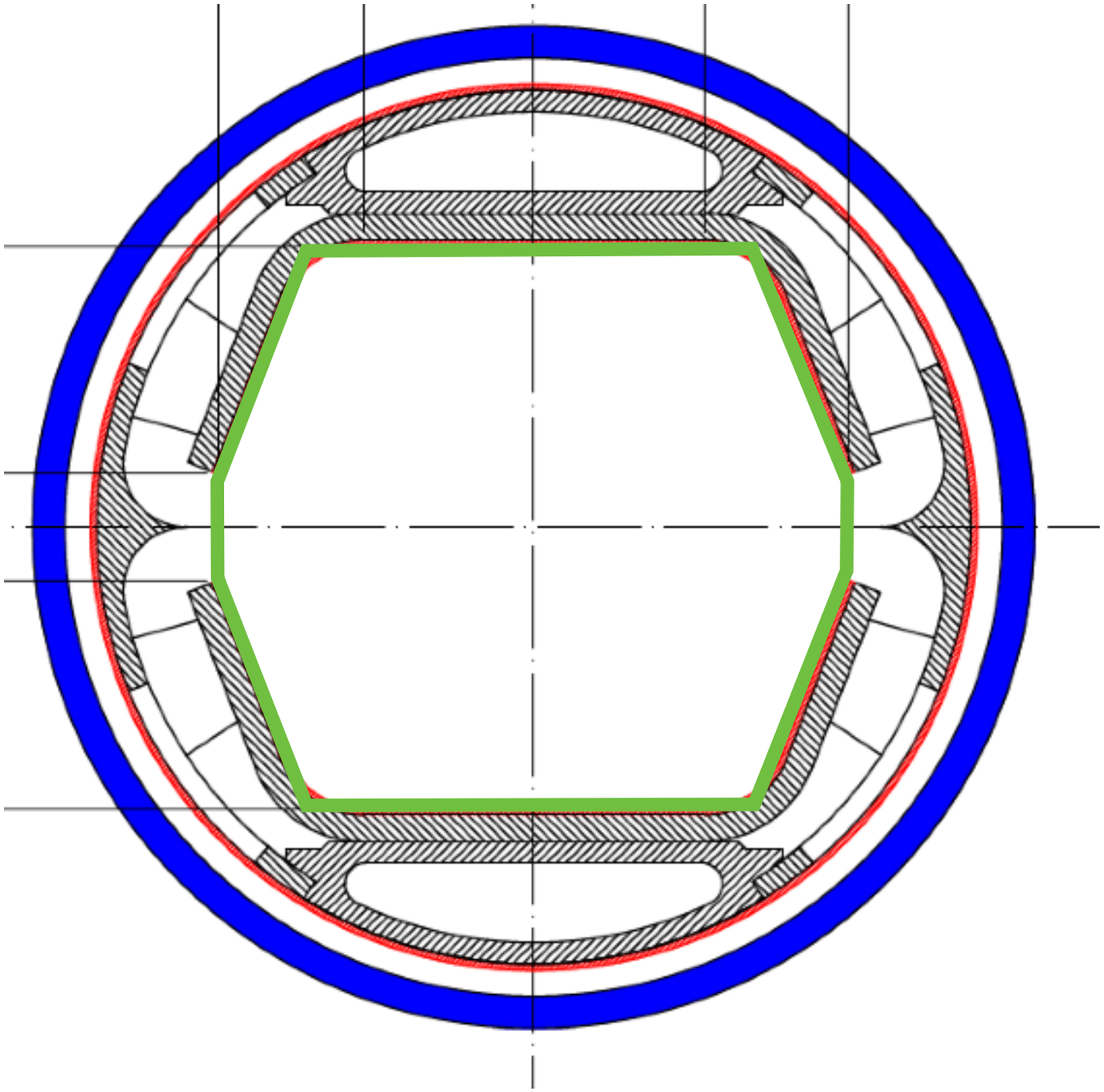

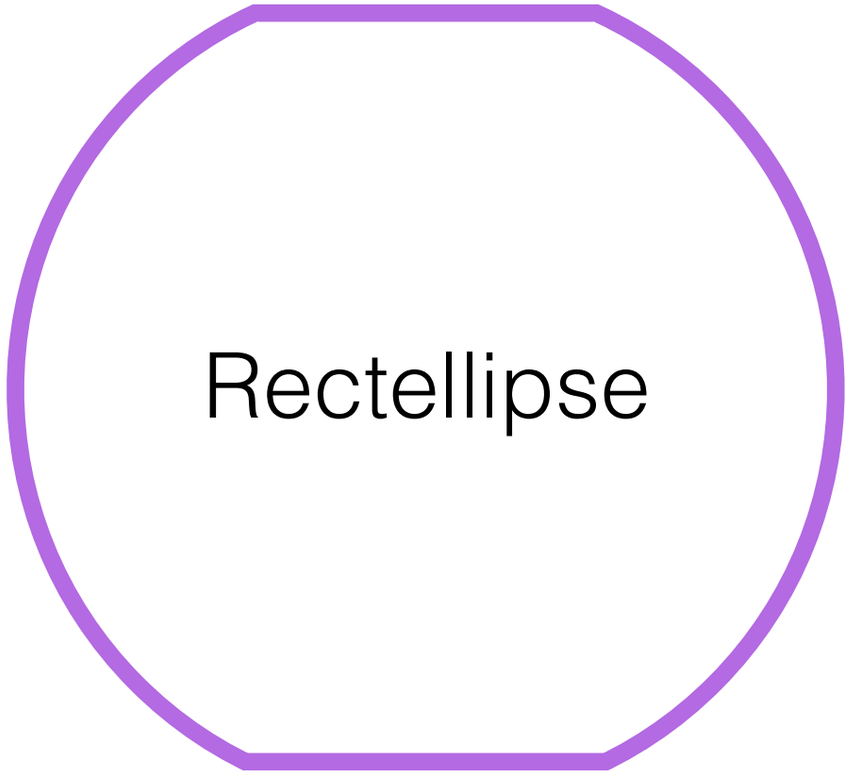

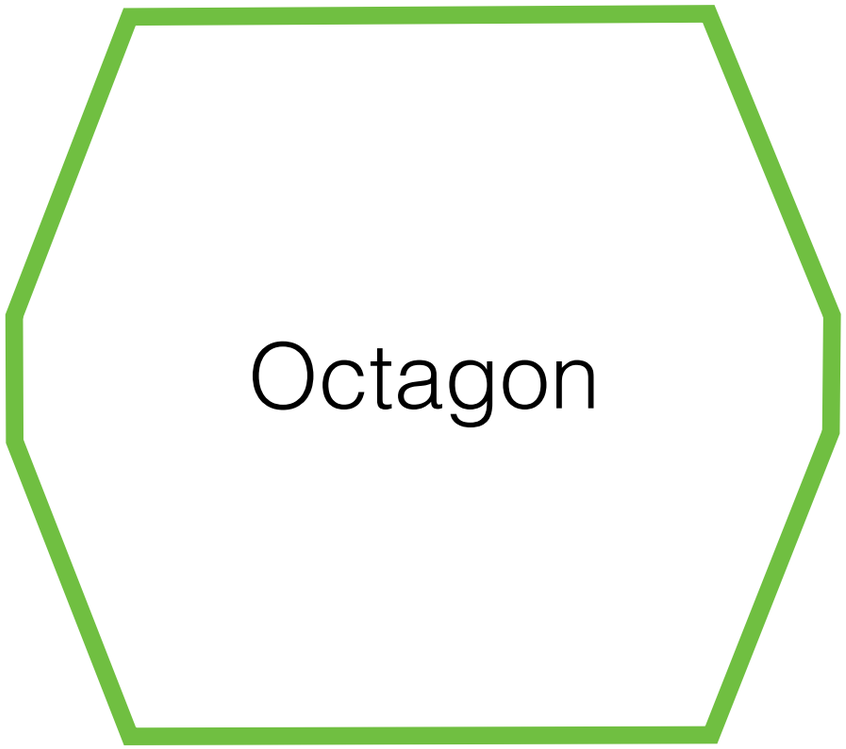

Beam Screen alignment

RECTELLIPSE, APERTURE=
{ 0.015000, 0.013200, 0.015000, 0.015000 }

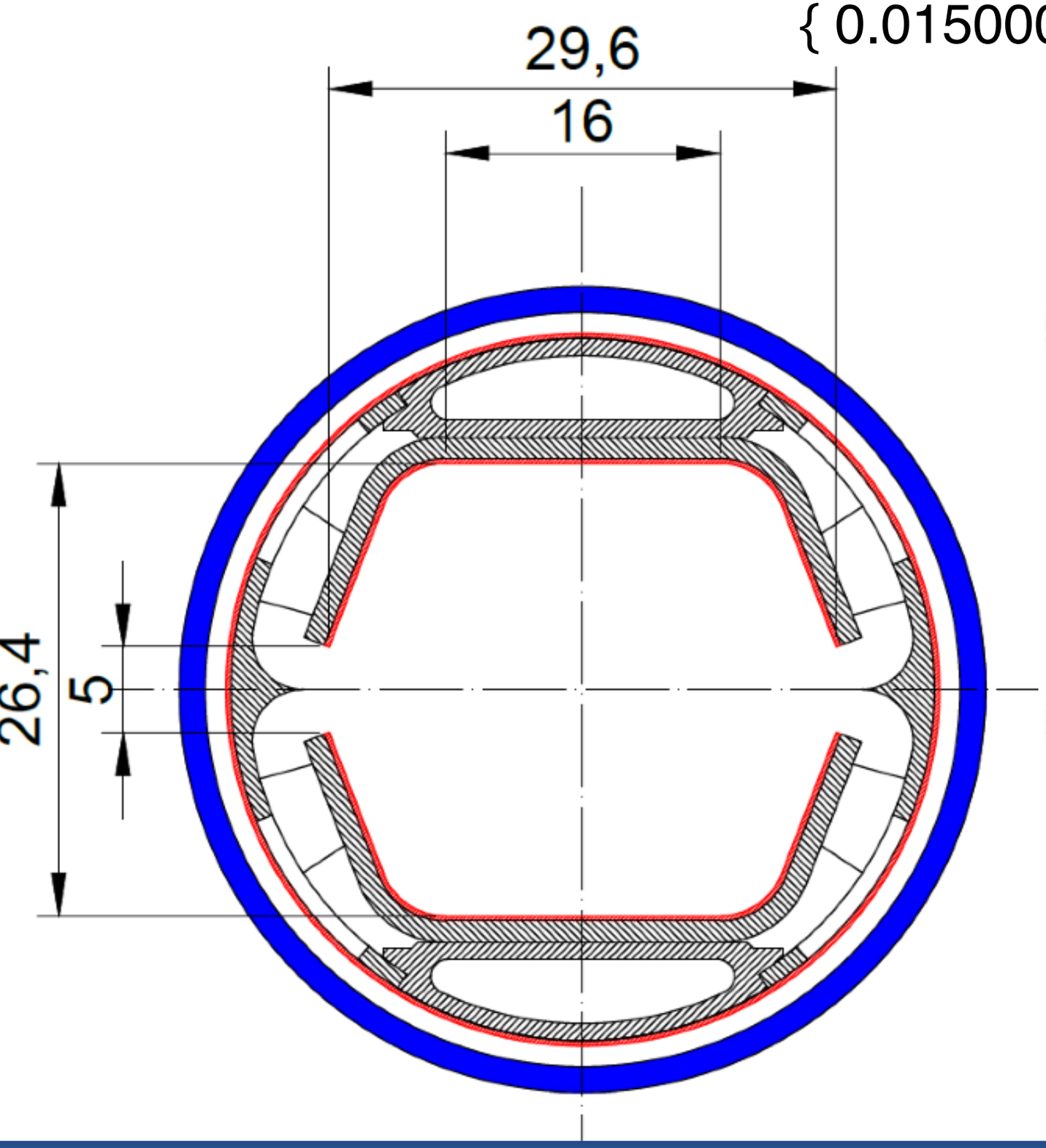

- In LHC there is a 1 mm tolerance for the alignment of the beam screen w.r.t. cold bore
- Here this is not regarded could reduce n1 in the arc by another 2σ

Impact of straight magnets

- Nb3Sn dipole magnets are straight
- Beam offset w.r.t. mechanical axis of dipole up to 2.5mm or ~5σ

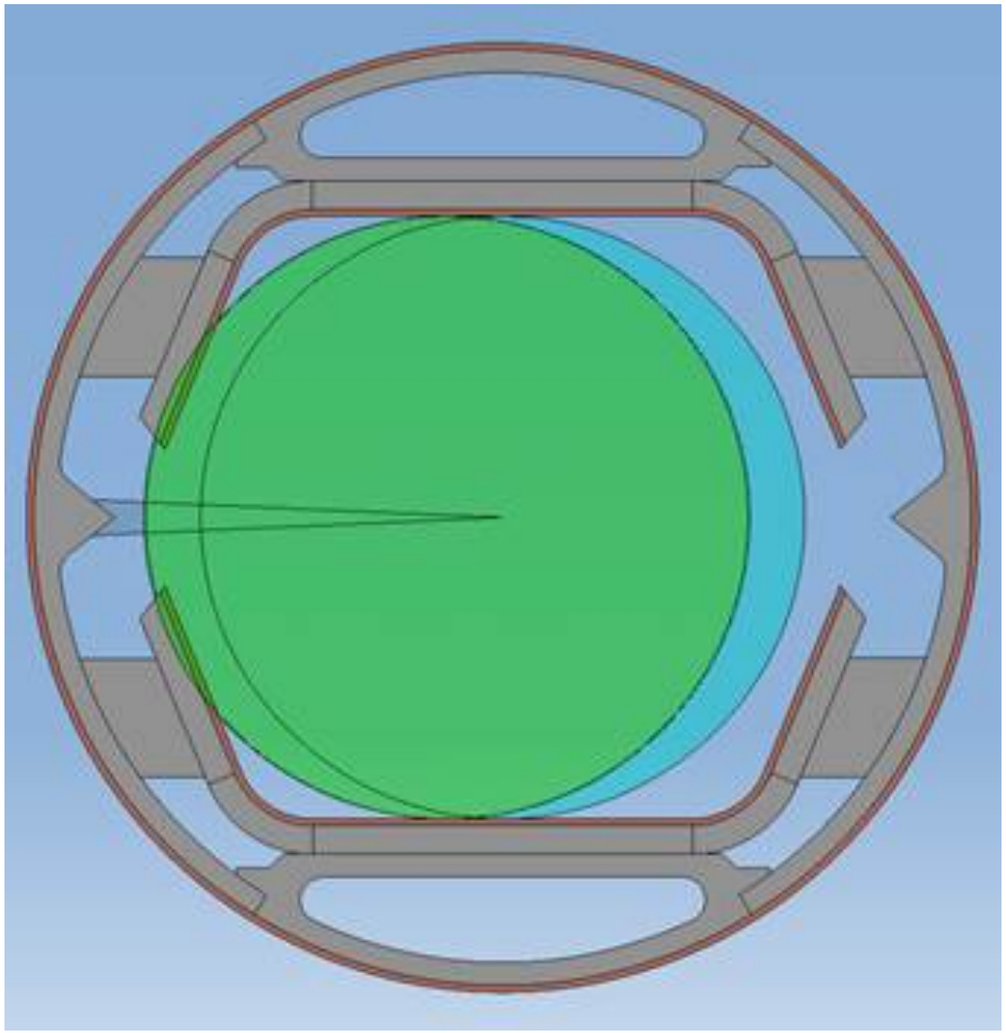

Summary

- n1 in the arcs at injection is critical and below target
- beam screen tolerance + beam offset in dipoles reduces it by another 2σ + 5σ —> n1 around 6.4σ
- How to cope?
  - Reduce CO tolerance from 4mm to 2mm?
  - Stretch the beam screen design?
  - Start with a beam offset at the dipole entrance?