UK-HL-LHC
WP4 Cold Powering

The SC-link splice concept and the update on the thermal-electric transient of newest SC-Link configuration

Iole Falorio
CERN-University of Southampton

Overview

- Cold powering
  - ✓ Context
  - ✓ Cable layout
  - ✓ Baseline design DFX
- Splices
  - ✓ Proposed geometry
  - ✓ 3D-Model
  - ✓ Analytical solution
- Transient scenarios
- Conclusions

Cold powering-Context

- Remote powering of the magnets
- Novel superconducting link carring about 150kA
- Each IP1 and IP5 sides equipped with 1 DFX + 1 DFM

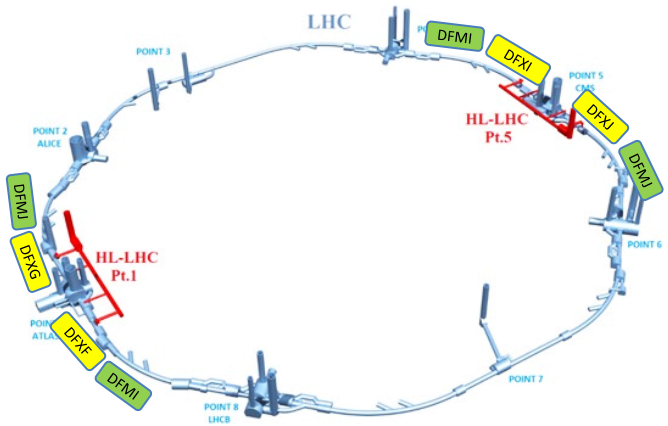

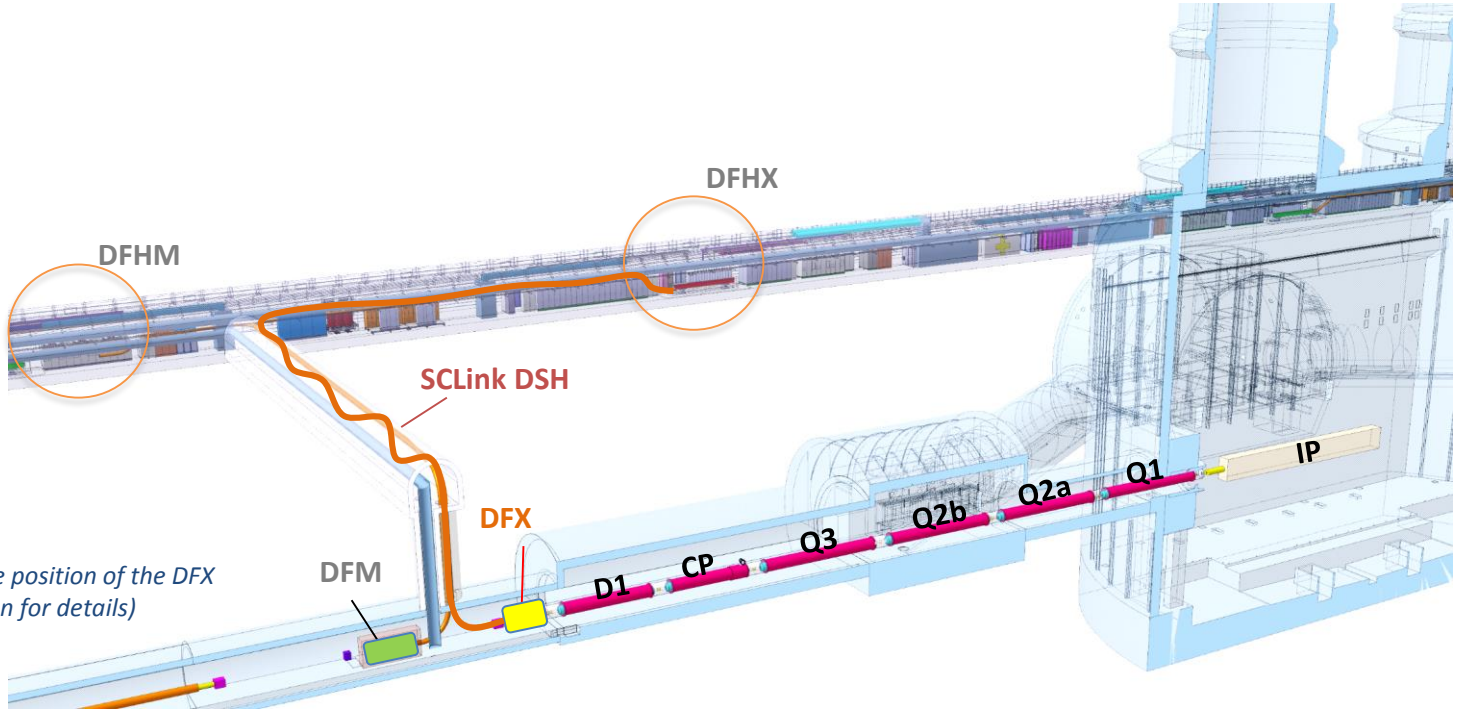

Illustration of the position of the DFX (not latest version for details)

High Luminosity LHC

Cold powering-SC-link cable layout

Baseline until May 2017consists of 6x18kA cables

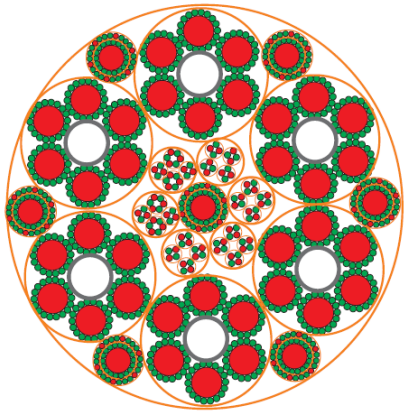

Φwire = 1 mm
37 MgB_2 filaments
Twisted filaments (LT=100 mm)
Φeq_MgB_2 = 56 μm
ACu ~ 5 % Awire (th=30 μm)
Cu plating
Sn coating of Cu surface

MgB_2 multi-cable assembly

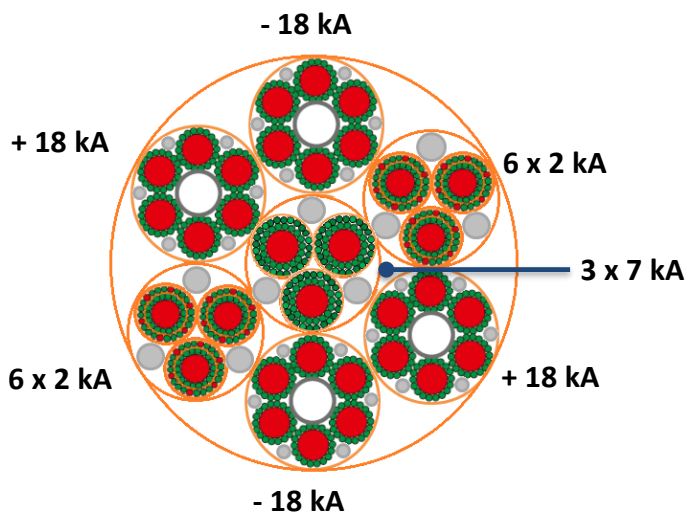

Φ ~ 75 mm

4 main sub-cables

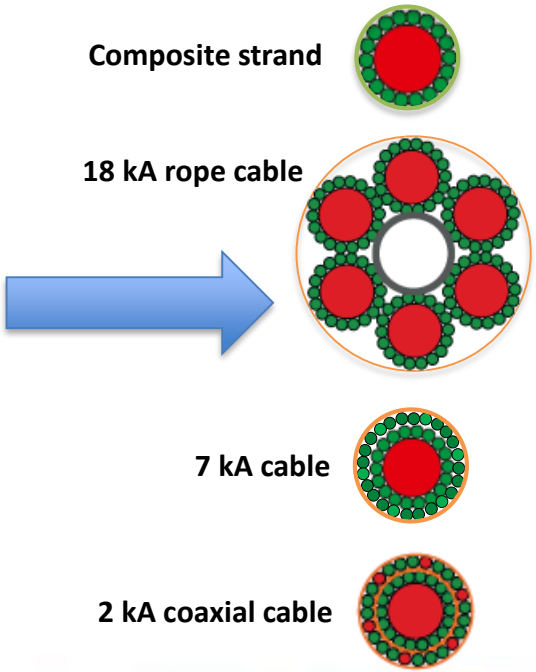

MgB_2 wire

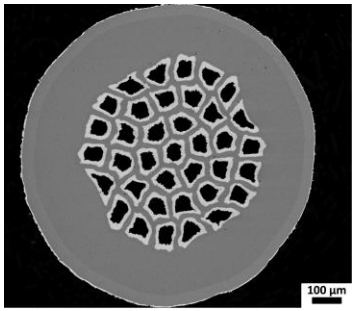

Φ ~ 1 mm

Cold powering-Baseline design DFX

- DFX basic functions:
  - **Electrical interface** between SC Link and triplets
  - **Supply cryogenics** to the SC-Link

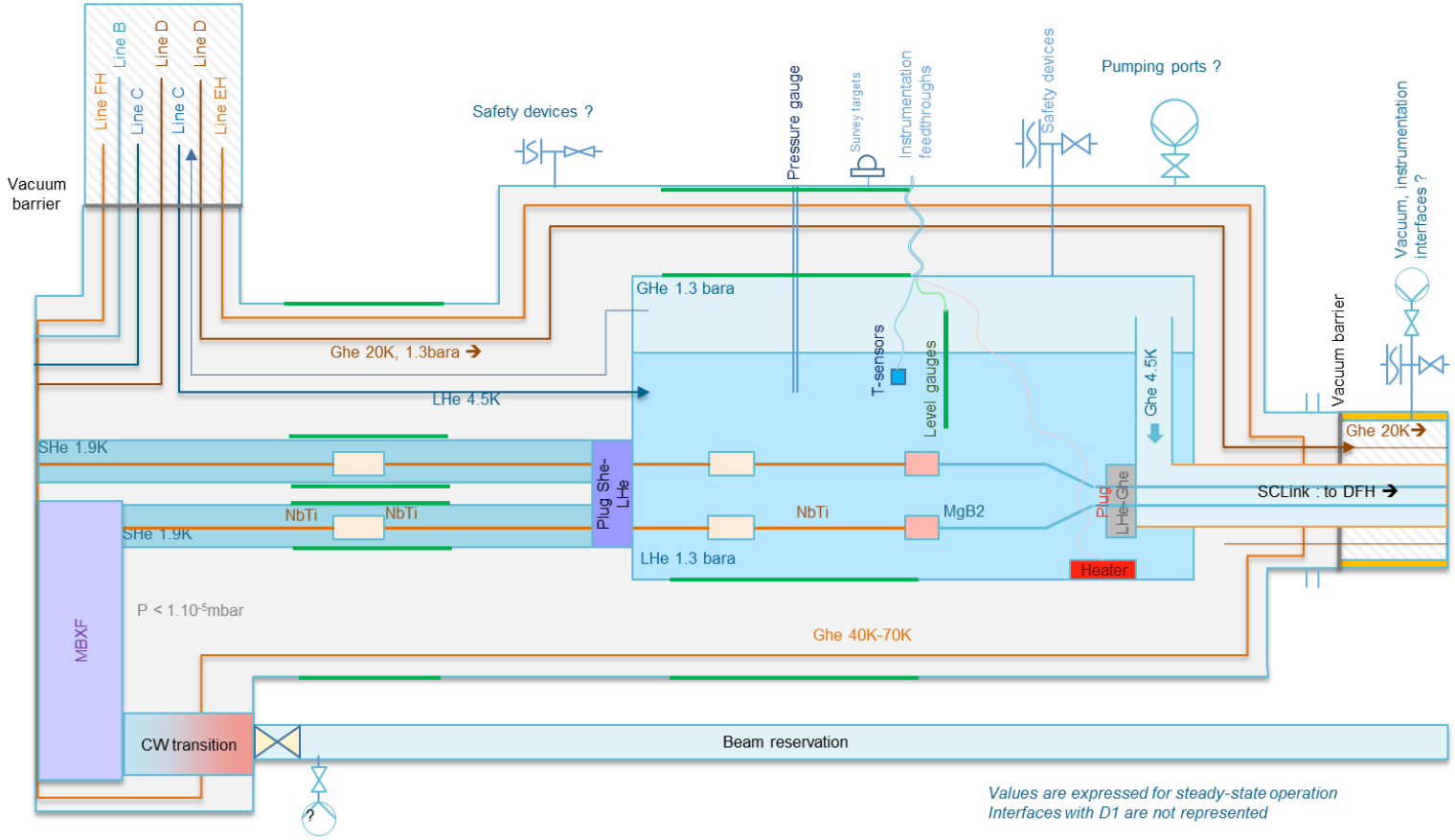

Illustrative design

Cold powering-From conceptual design to 3D design

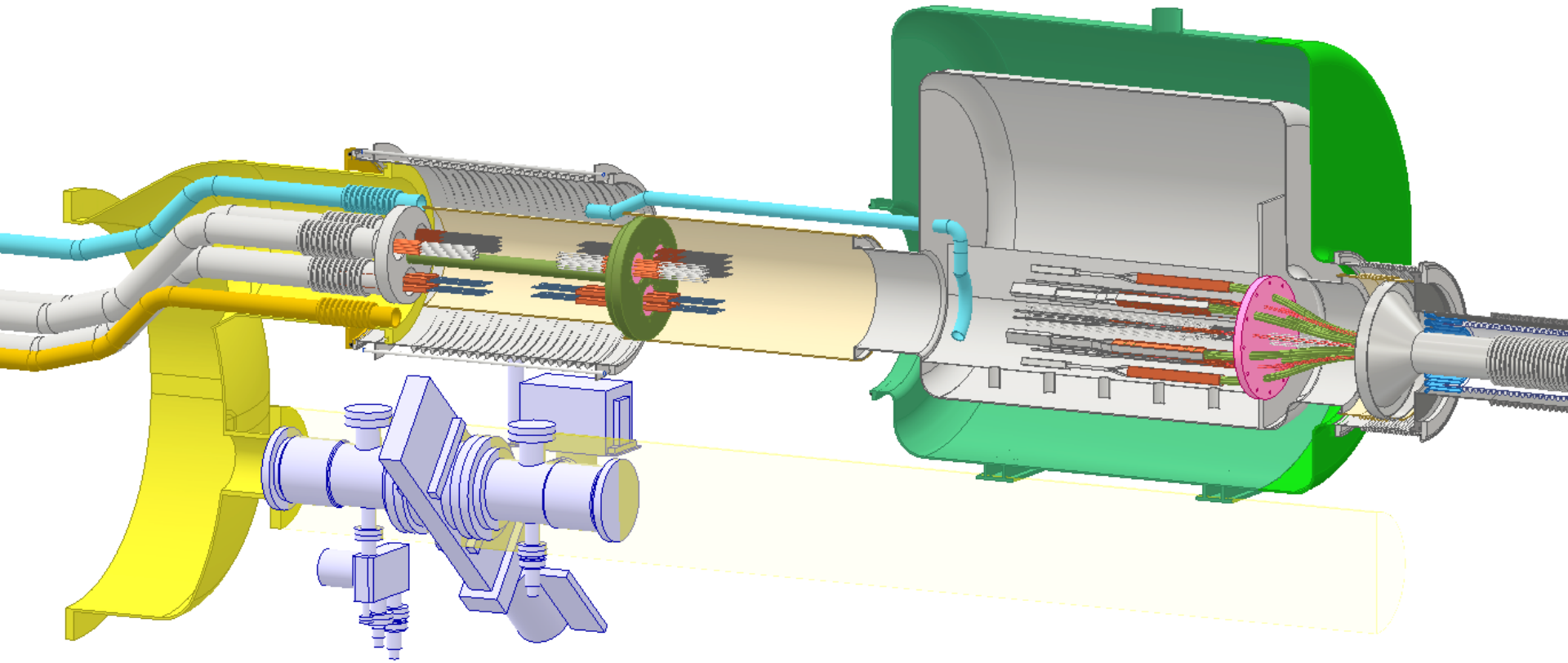

Cold powering-Electrical layout DFX

Key challenges :

- Integrate splices for access, maintenance
- Prepare SC-Link end before installation
- New cables to be developed ➔ new splices, new tooling, new integration
- Allow enough space between splice for tooling
- Design optimum splice length and heat load dissipation

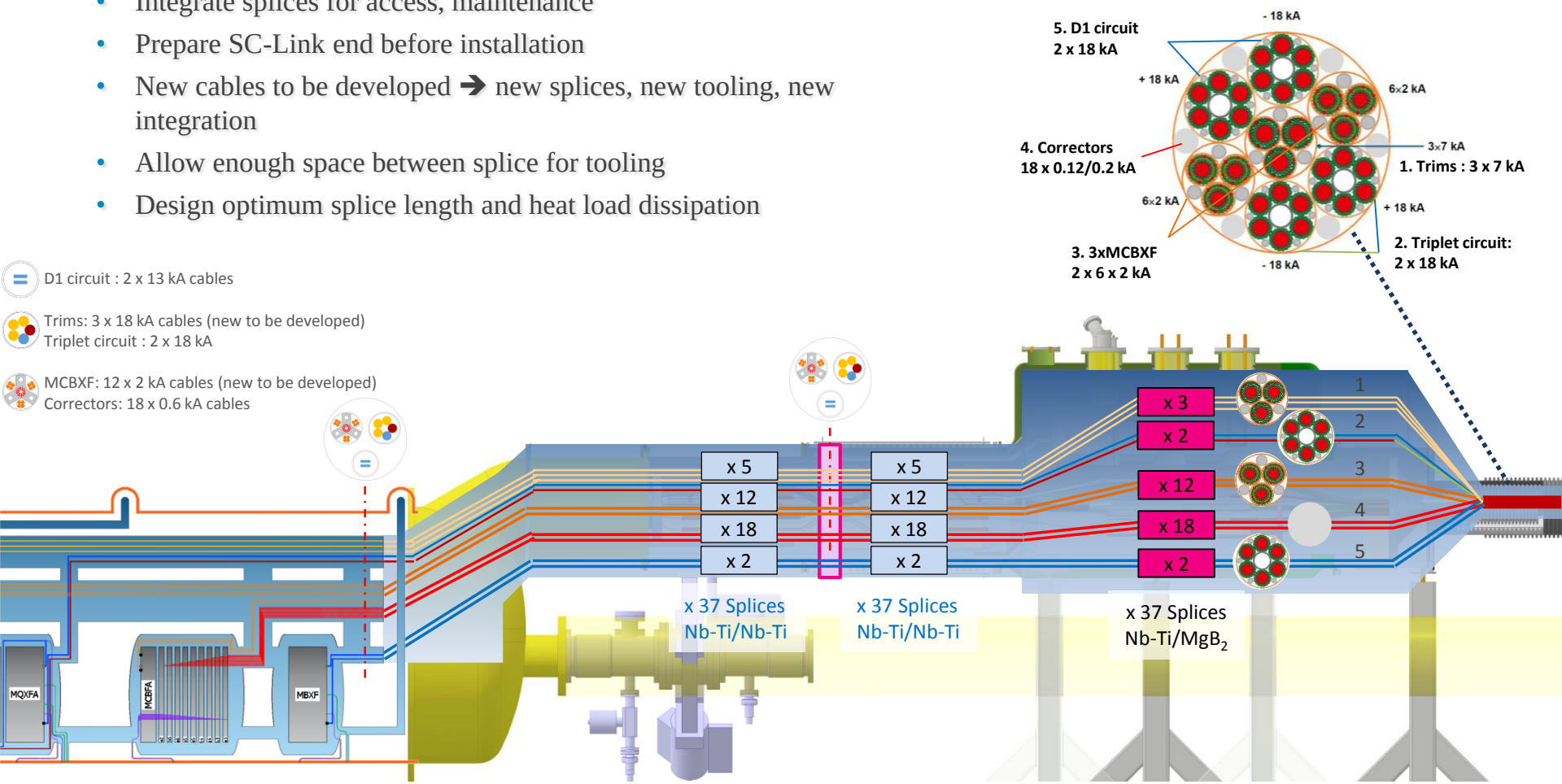

Splices-Proposed geometry

OBJECTIVE: construct an affordable low resistance joint and highlight where the main contribution to the resistance come from and how it can be reduced

- 2 Copper halves to be bolted together to accommodate the sub cable
- NbTi cables soldered on the flat sides of the copper
- Some wires will see a complex path flow to the NbTi

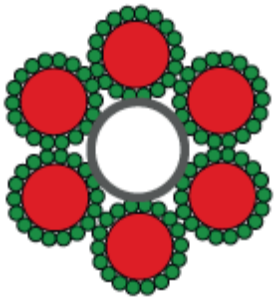

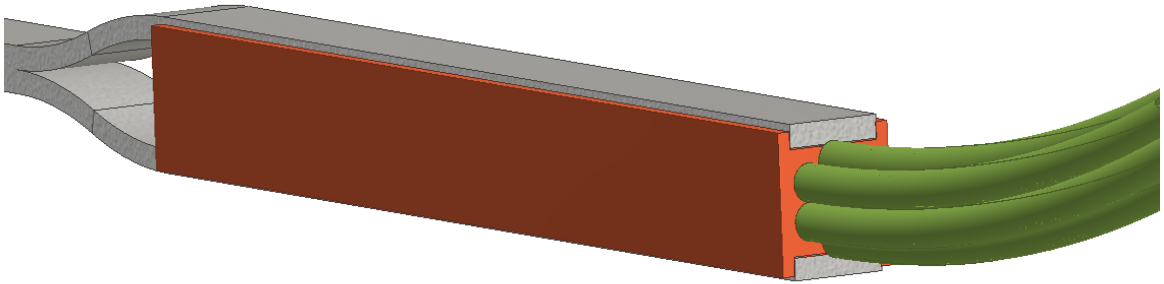

ADVANTAGES:

- Accounts for possible irregularity in the geometry;
- Control on the solder thickness when applying pressure;
- The applied pressure avoid cables to slip away in case of quench/soldering re-melting;

High Luminosity LHC

Splices-3D Model COMSOL

- Double plane symmetry allows to study a quarter of the geometry;
- Filaments considered as an equivalent inner core with ρ_{SC} =10^{-5} nΩm→ hexagonal shape for better meshing;
- Inner core surrounded by a ring of Monel with ρ_{Mo} =278 nΩm;
- Polygon around the wire for finer mesh of the current transfer region;
- Anisotropic properties of the NbTi in the *z* and *x-y* directions;
- Voltage boundary conditions at the MgB_2 end and at the NbTi end

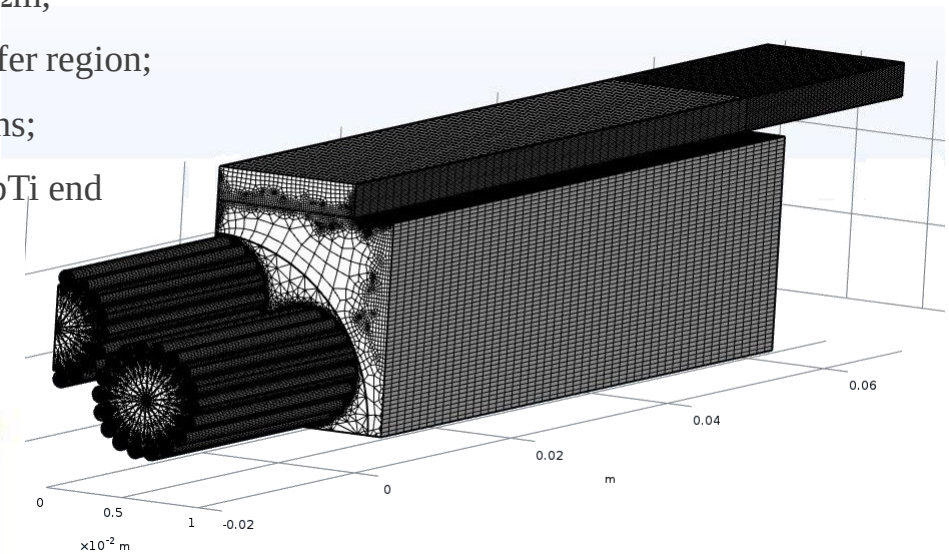

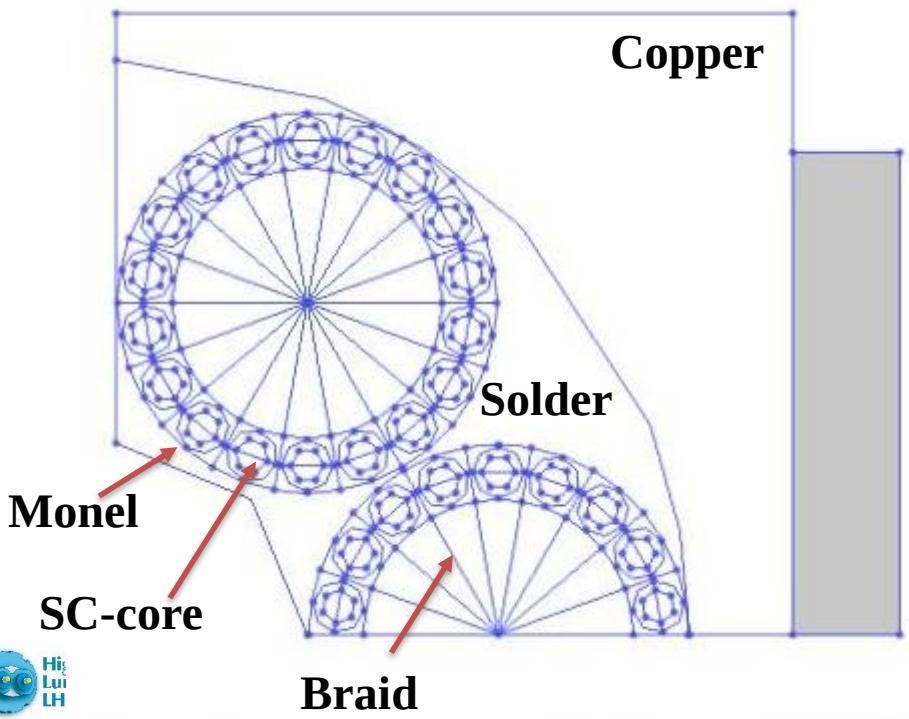

Name	Description	Value[mm]
dw	MgB2 wire radius	0.962
dwc	MgB2 wire SC core radius	0.628
hCu	Copper block hight	11.6
wCu	Copper block width	12.6
hNbTi	Rutherford cable hight	2
wNbTi	Rutherford cable width	9

Splice-Expected resistance

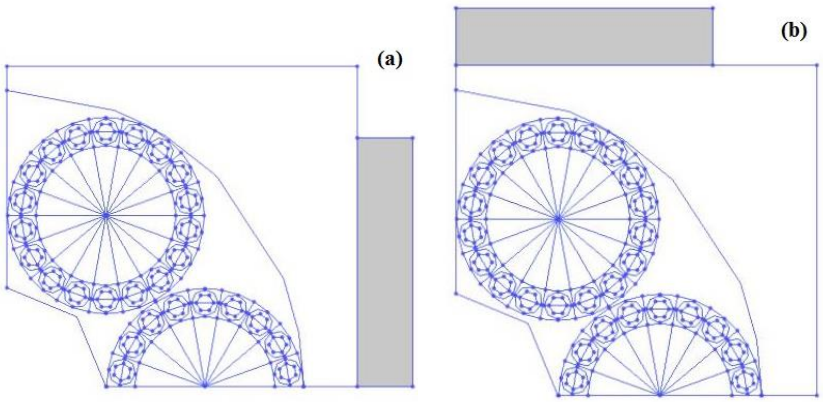

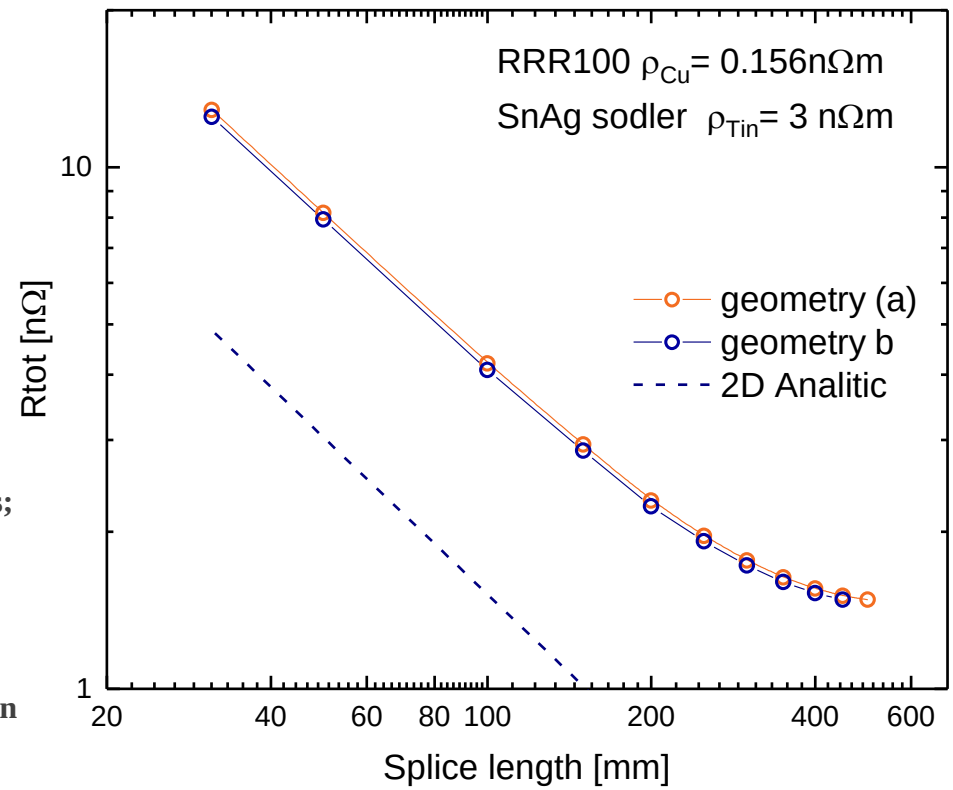

- **Total resistance found as a parallel between 4 equal blocks;**
- **Decrease of splice resistance with length ($1/L_C$) until saturation is reached**
- **Increasing joint resistance above 400 mm→ less than 2% reduction in resistance observed, above 300 mm →less than 10%**
- **No major difference btw the two geometries;**
- **According to the analytical calculation of the resistance across the Monel multiplied by the number of wires and sub unit cables in the splice-→35% contribution of the total resistance comes from Monel.**

$$R_{C,sheath} = f\,\rho_{sheath}\,\frac{1}{3\,n_w \pi\, L_C}\log\left(\frac{d_w}{d_{sc}}\right)$$

High Luminosity LHC

Splice-Expected resistance

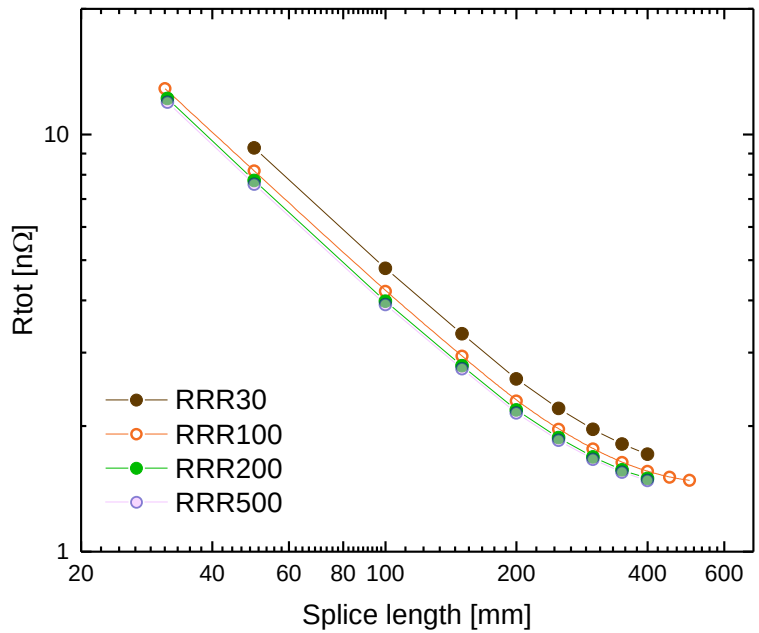

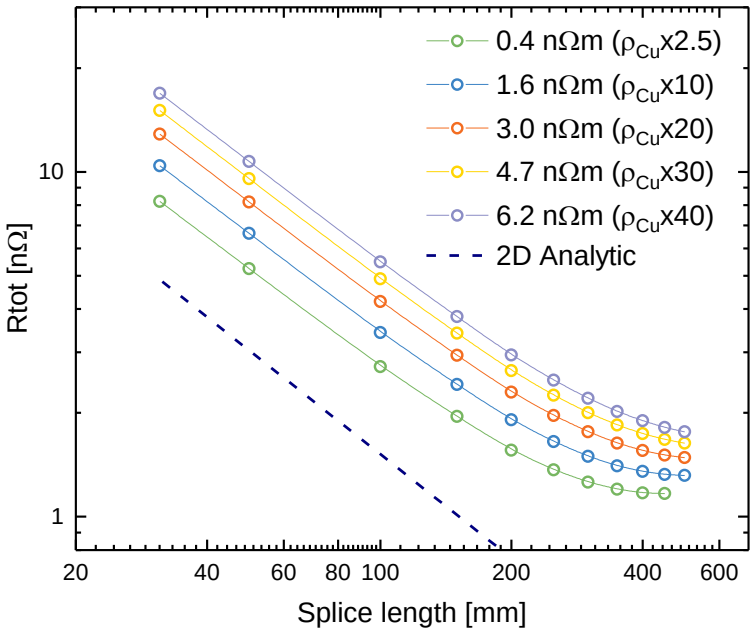

- **Measurements done considering better quality copper show the dominant resistance comes from Monel and solder;**
- **Measurements done with different solder resistivity show that with reducing resistivity of solder the dominant one becomes the one of Monel;**
- **With ρ_{Tin}= 0.4 nΩm-→ 60% of the contribution comes from Monel**

$$R_{C,sheath} = f\,\rho_{sheath}\,\frac{1}{3\,n_w \pi\,L_C}\log\left(\frac{d_w}{d_{sc}}\right)$$

High Luminosity LHC

Splice-Expected resistance

L_C=50 mm

Voltage | J_z

$z = 0$

z-=$Lc/2$

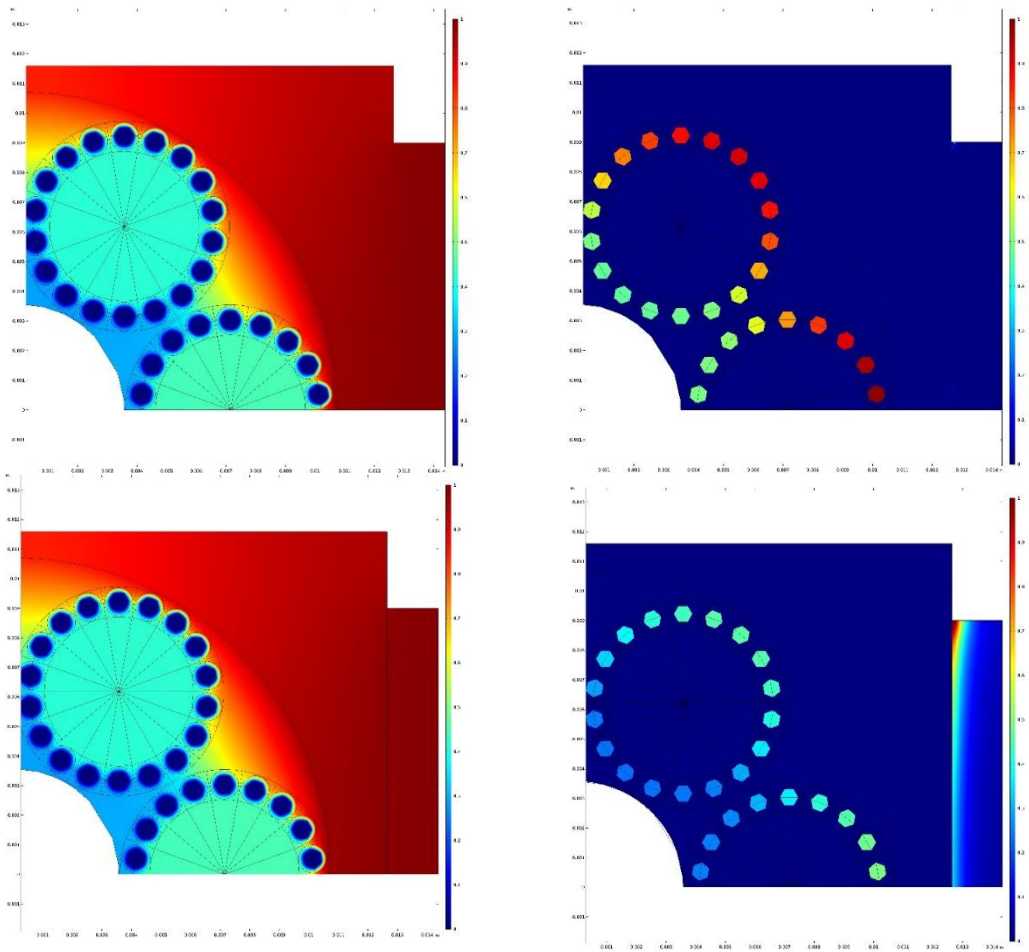

- Current density not homogeneous in the wires of the sub-unit-→ half current density in some wires;
- In reality effect mitigated by the twisting of the wires;
- The most resistive path is across the Monel;
- The current in the wires that carry the highest current, flows only through half of the Monel ring;
- Similar conclusions can be drawn at any splice length

High Luminosity LHC

Splice-Expected resistance

L_C=300 mm

Voltage **J_z**

***z* = 0**

***z*-=*Lc*/2**

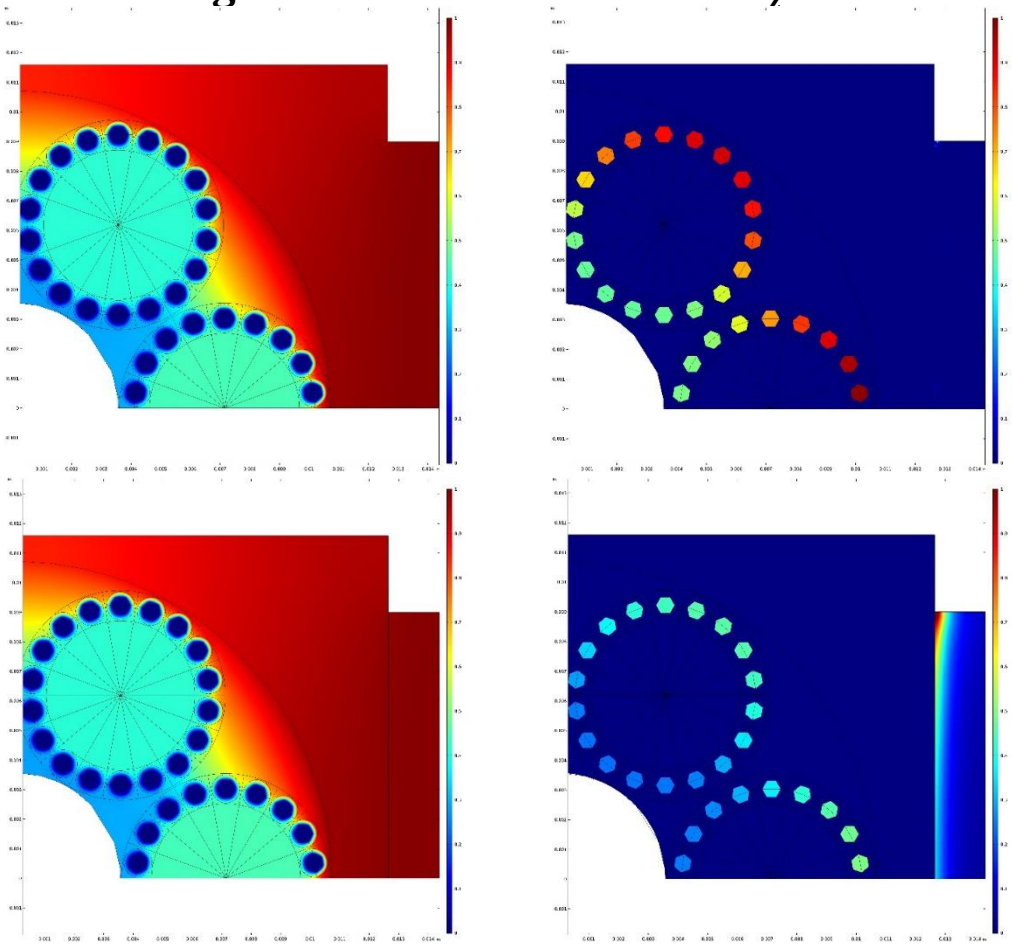

- **Current density not homogeneous in the wires of the sub-unit-→ half current density in some wires;**
- **The most resistive path is across the Monel;**
- **The current in the wires that carry the highest current, flows only through half of the Monel ring;**
- **Similar conclusions can be drawn at any splice length**

High Luminosity LHC

Splice-Expected resistance

- Heat load of splices

- **For a splice 300 mm long with RRR100 copper and SnAg →Rc=1.75 nΩ→ P=Rc*20kA^2 =0.7W→q”=20 W/m^2**
- **Liquid helium in nucleate boiling *h*=1W/cm^2, max ΔT_{max} =1K→ q”$_{max}$=10^{4}W/m^2**
- **Are splices done on the same point practical for intervention/repairing?→SPLICES COULD BE STAGED**
- **Length can become an issue**
- **Reducing length increased power dissipation i.e. 150mm splices→ Rc=3 nΩ →1.2W→q”=70W/m^2**

TWO ORDERS OF MAGNITUDE BELOW!

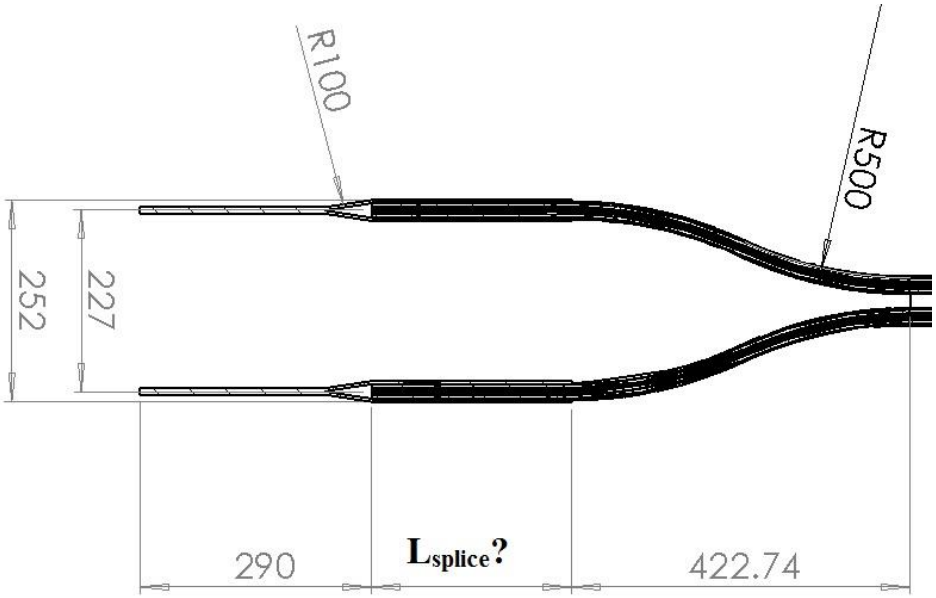

High Luminosity LHC

Transient scenarios: D1 Circuit Quench

New cable baseline→ lost symmetry

Field produced by the cables are quenching is affecting the other cables?

- Inner triplet circuit quench:
- D1 circuit quench
- Coaxial cables (CC) quench

Normally margin →5K

Imposition of 0.4 T on trims

Trims works nominally at 2 kA although rated for 7kA→ still 10K margin

Losses in the scenario are bigger but the temperature margin is not exceeded

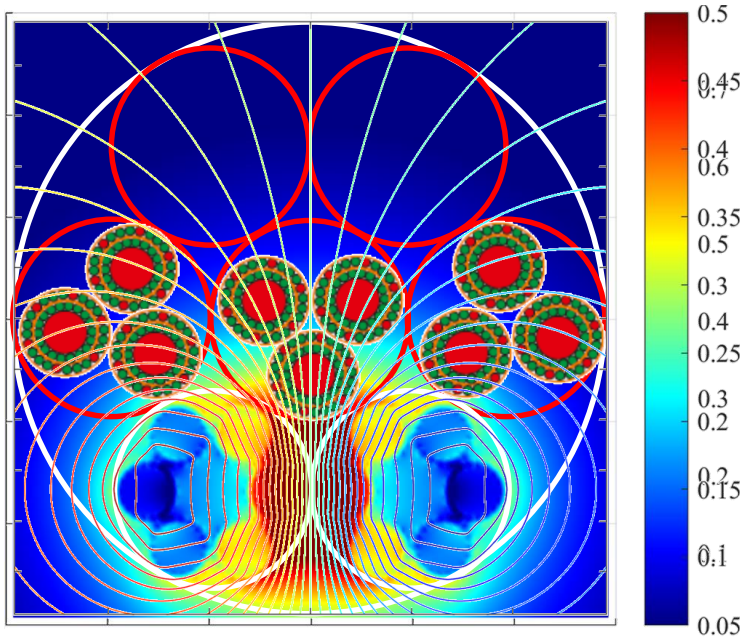

For the trim cables

$$\Gamma = \frac{Q}{2\mu_0^{-1}\Delta B^2} \leq 5$$

$$\Delta B \leq 0.4\text{T}$$

$$Q \leq 10\mu_0^{-1}\Delta B^2 = 1.24\text{mJmm}^{-3}$$

Heating from the high temperature end at 20K

$$c_p(20\text{K}) \sim 0.1\text{mJmm}^{-3}\text{K}^{-1}$$

$$\Delta T \leq c_p^{-1} Q = 12.4\text{K}$$

Which is within the temperature margin

$$\Delta T_m = T_{CS} - T = 33 - 20 = 12\text{K}$$

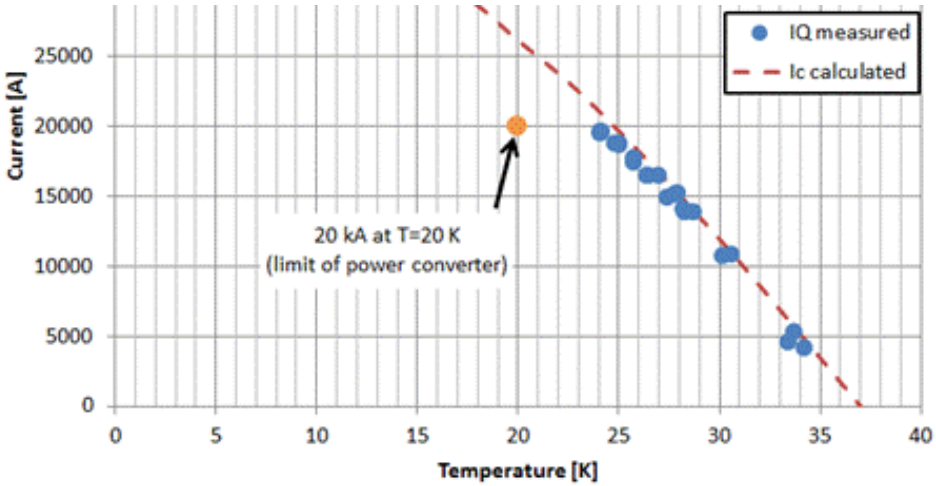

Conclusions

- The heat load dissipation is of about 0.7 W and make it longer or using a solder with smaller resistivity will not help much on reducing the total resistance, the Monel is dominating.
- The level of contact resistance manageable;
- Geometry can be improved to allow more homogeneous current and smaller resistance;
- Experimental results needed to prove we get what expected and its reproducibility;
- It has to be decided if it is acceptable to work with shorter length and more resistance;

High Luminosity LHC