ICABU2017, HICO, Gyeongju, Korea, November 15-17, 2017

A Plan for Neutron Source Based on 100-MeV Proton Linac at KOMAC

Jeong-Jeung Dang, Han-Sung Kim, Kyung-Hyun Kim, Hyeok-Jung Kwon, Sang-Pil Yun, Young-Gi Song, Yong-Sub Cho

16 Nov. 2017

KOMAC
Korea Atomic Energy Research Institute

KAERI

KOMAC
Korea Multi-purpose Accelerator Complex
양 성 자 가 속 기 연 구 센 터

Outline

KOMAC

- Introduction to KOMAC facility
- Present status : Neutron generation based 100-MeV Linac
- Plan : R&D for improvement of neutron source at KOMAC
  - ✓ Neutron generation target
  - ✓ High energy accelerator
- Summary

KOMAC - KOrea Multi-purpose Accelerator Complex

KOMAC

◆ Located on Miraero (road to the future), Gyeongju (a historic city)

- ✓ Developed via Proton Engineering Frontier Project (2002.7~2012.12, 10.5 Year)
- ✓ Budget investigated: ~300M $US (Gov: 180M, Gyeongju: 110M, Industry: 10M)

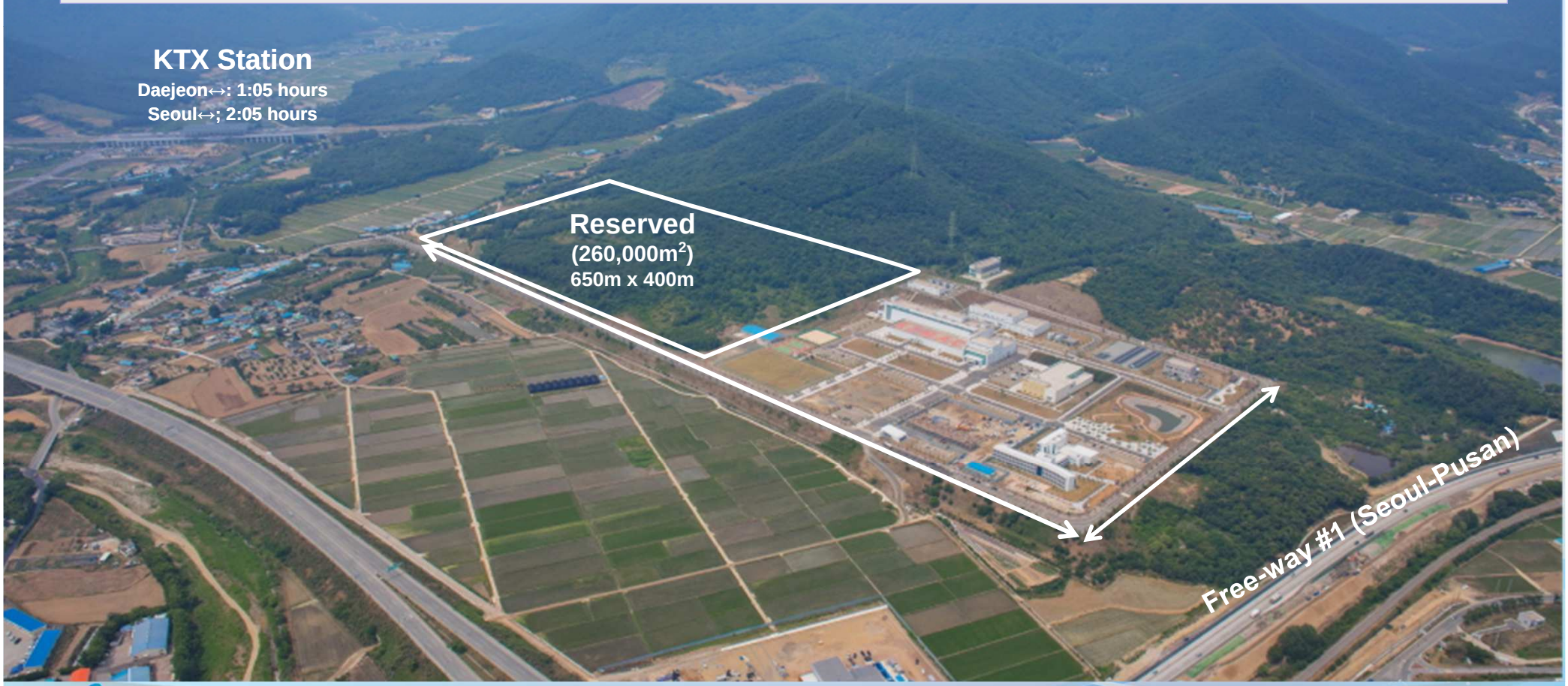

KOMAC Close-up view (in July 2017)

KOMAC

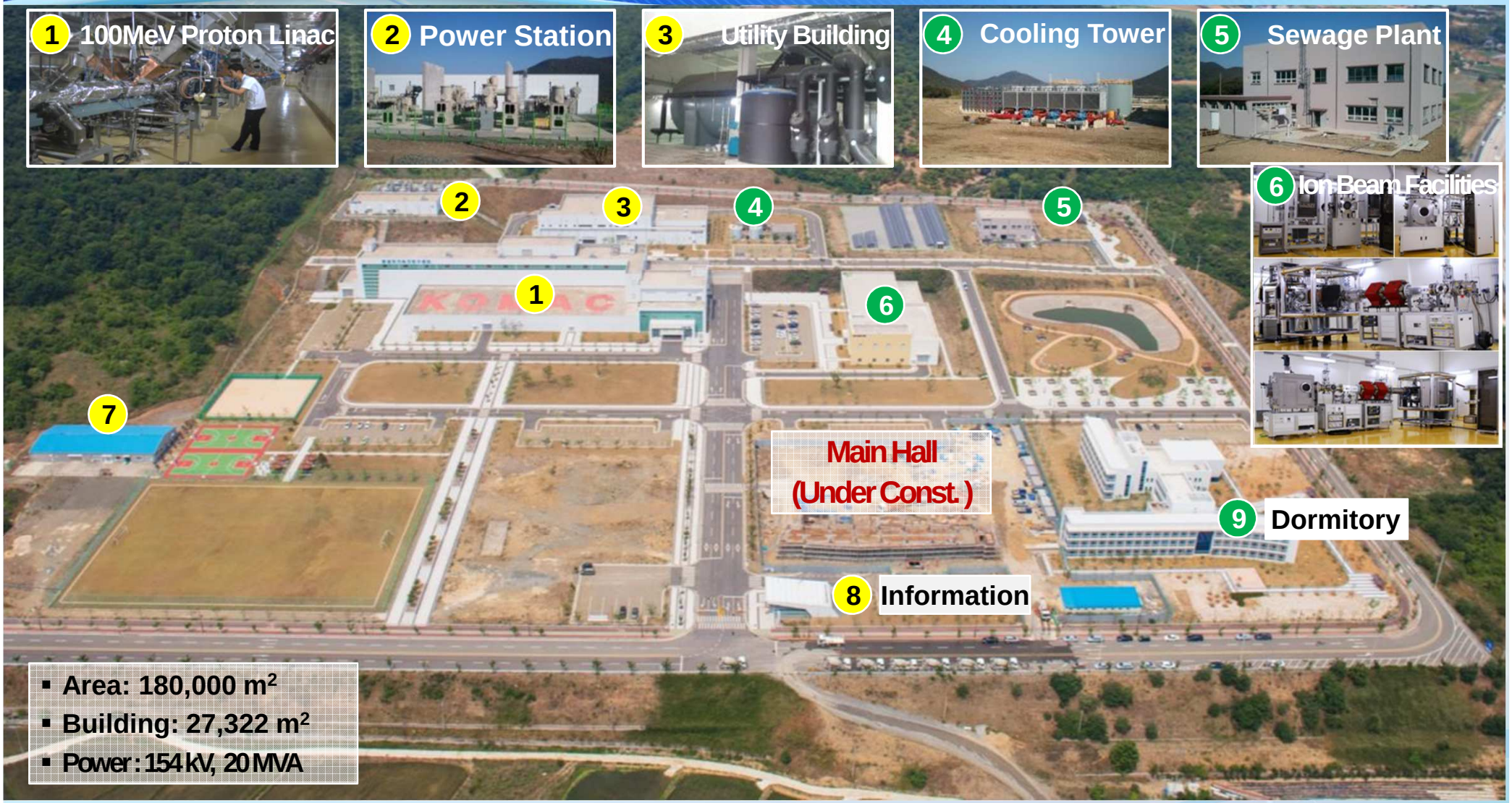

- Area: 180,000 m^2
- Building: 27,322 m^2
- Power: 154 kV, 20 MVA

100-MeV Linac and Beam Lines

KOMAC

Features of KOMAC 100-MeV linac

- ✓ 50-keV Injector (Ion source + LEBT)
- ✓ 3-MeV RFQ (4-vane type)
- ✓ 20 & 100-MeV DTL
- ✓ RF Frequency : 350 MHz
- ✓ Beam Extractions at 20 or 100 MeV
- ✓ 5 Beamlines for 20 MeV & 100 MeV

Extraction Energy (MeV)	20	100
Peak Beam Current (mA)	20	
Max. Beam Duty (%)	24	8
Avg. Beam Current (mA)	4.8	1.6
Pulse Length (ms)	2.0	1.33
Max. Repetition Rate (Hz)	120	60
Max. Avg. Beam Power (kW)	96	160

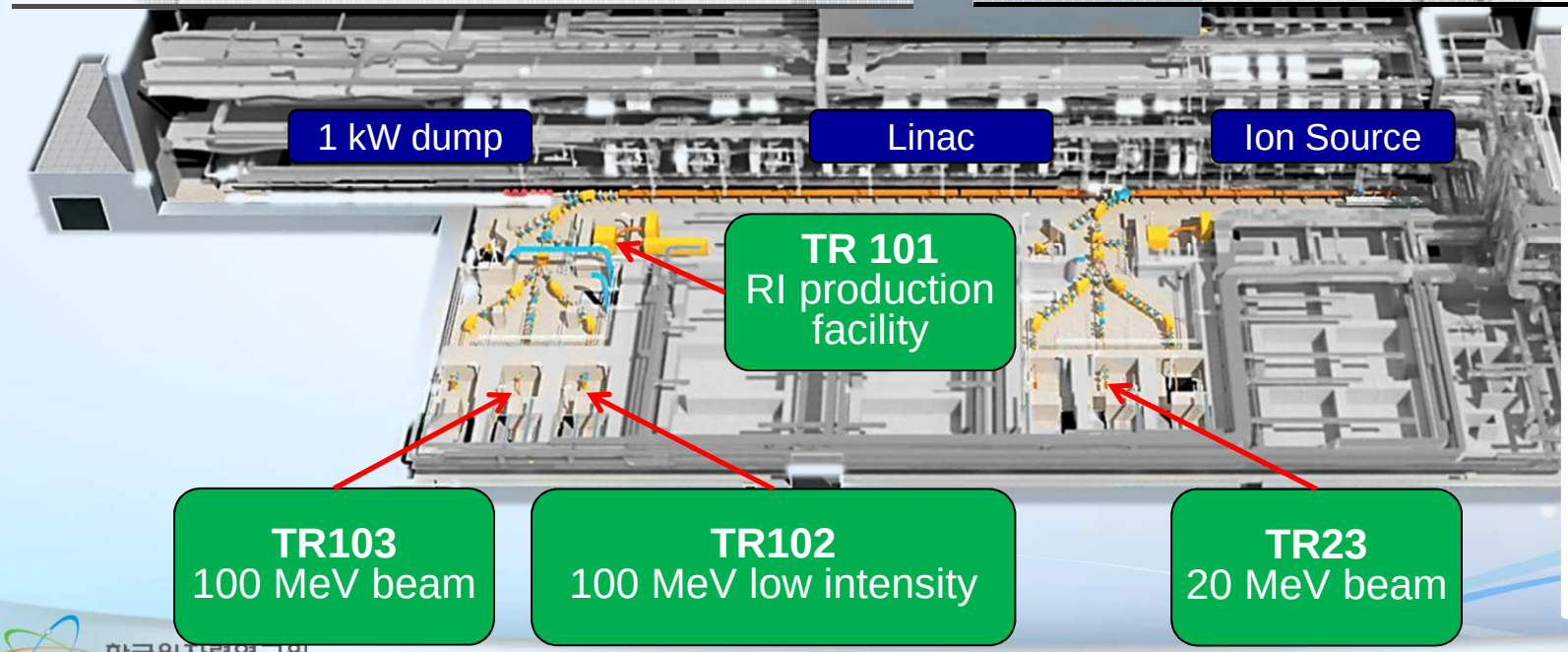

20 MeV BL (TR23)

100 MeV BL (TR103)

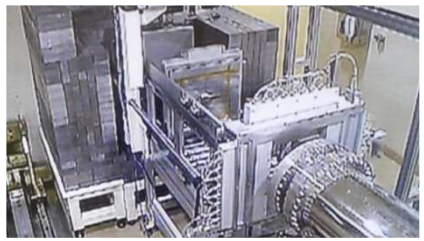

Operation Statistics

KOMAC

◆ Operated in weekly-based schedule through a yearly plan

	2013	2014	2015	2016	Sum
Operation hours	2,290	2,863	2,948	2,961	11,062
Availability	82.0%	86.3 %	90.5%	94.9%	89.2%

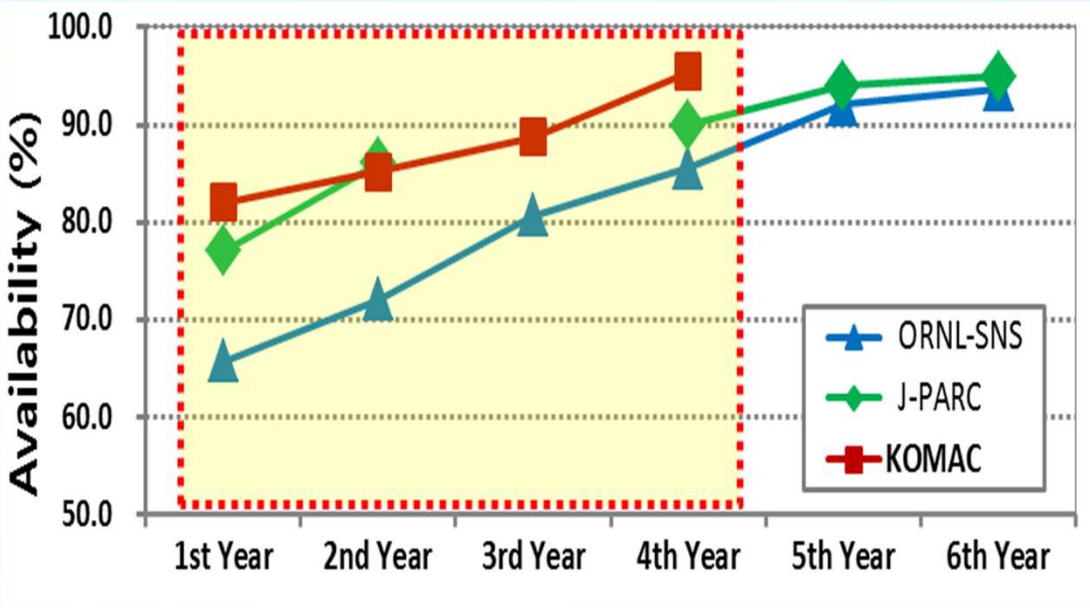

Beam Service Statistics

KOMAC

◆ Proton Accelerator Utilization

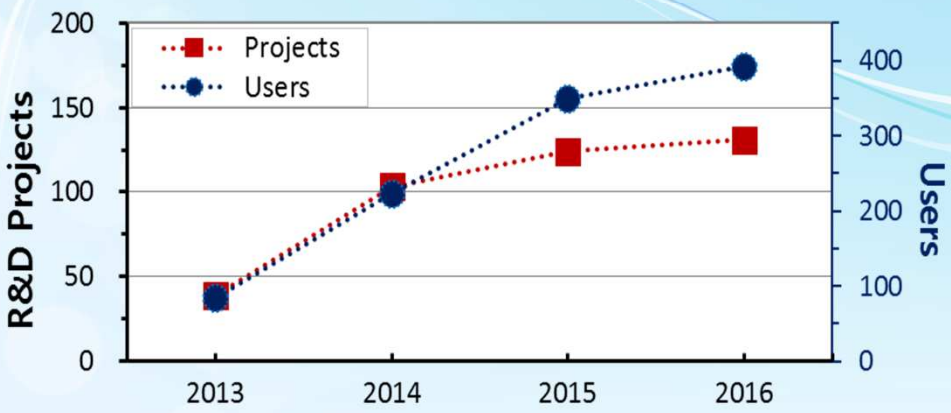

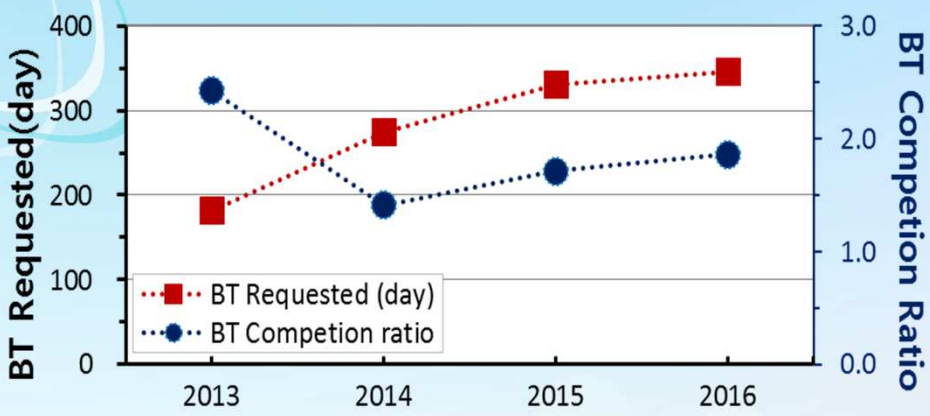

R&D Fields: Bio/medical(26.4%), Materials(26.4%), SpaceRad./Basic Sci.(22.6%) etc.

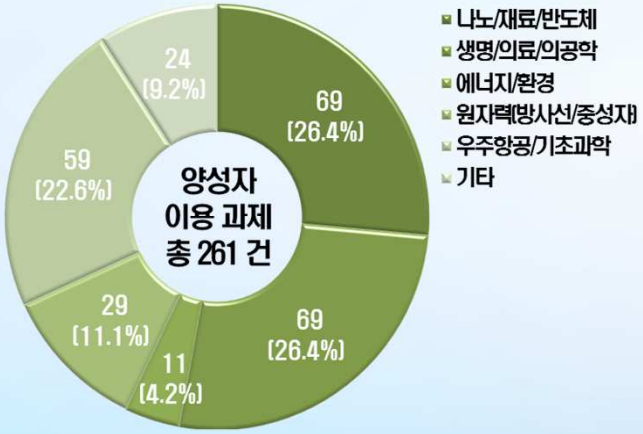

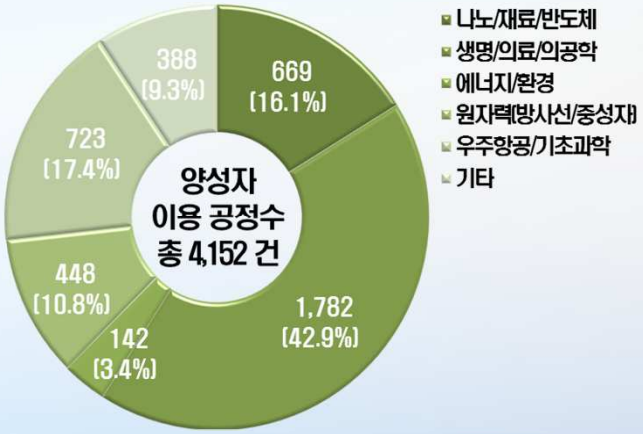

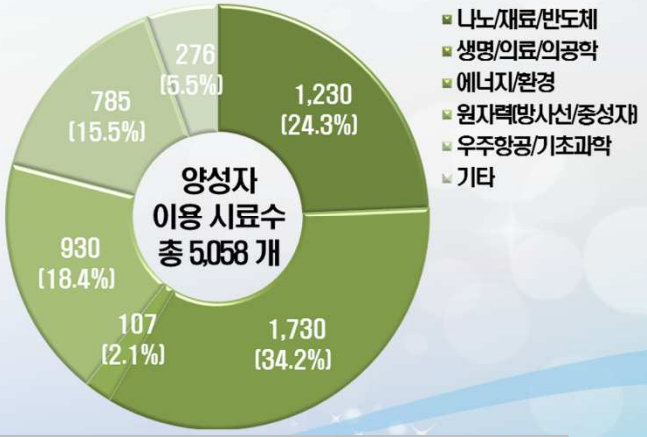

KOPUA: Korea Proton Beam User Association (Self-organized user network)

- ✓ **PAC(Program Advisory Committee): Review proposals & Allocate beamtime**

Secondary Particle

KOMAC

- KOMAC prepares programs to improve proton linac and to supply secondary particle.
  - ✓ Neutron: Neutron imaging, Nuclear data, Detector, Semiconductor, etc.
  - ✓ RI: Medical imaging(^{67}Cu, ^{82}Sr, ^{22}Na, etc.), β-NMR(^{8}Li, ^{11}Be, ^{31}Mg, etc.), etc.

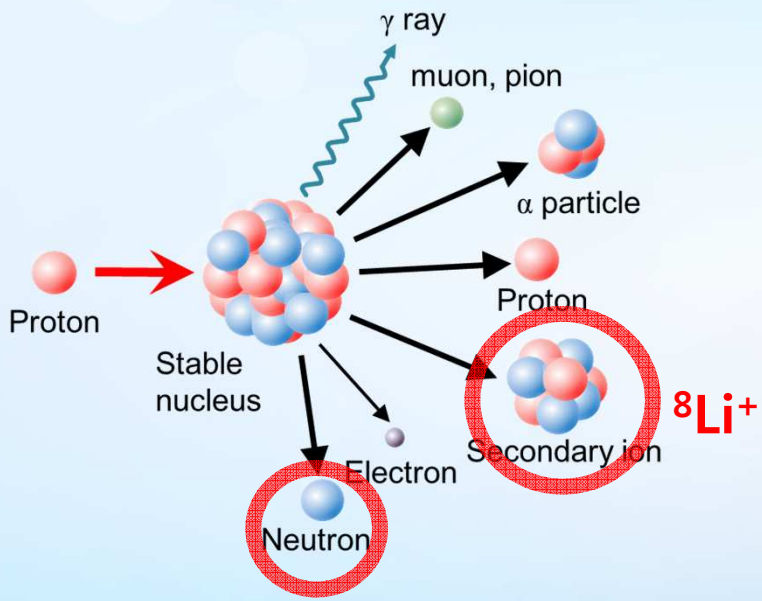

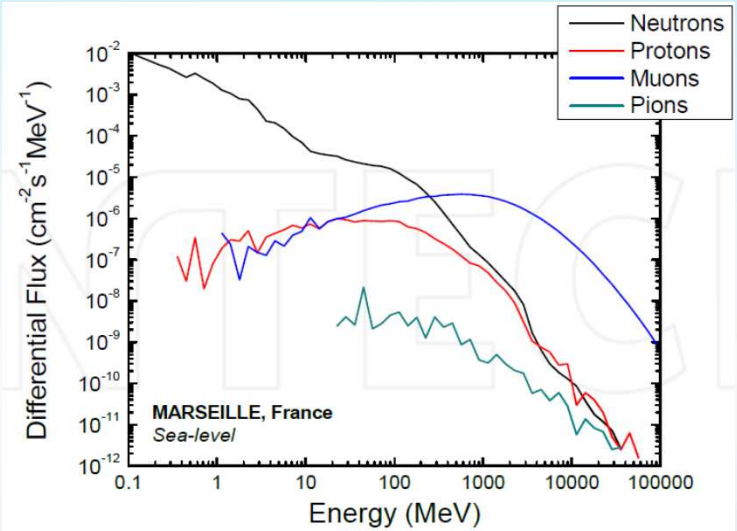

Space radiation

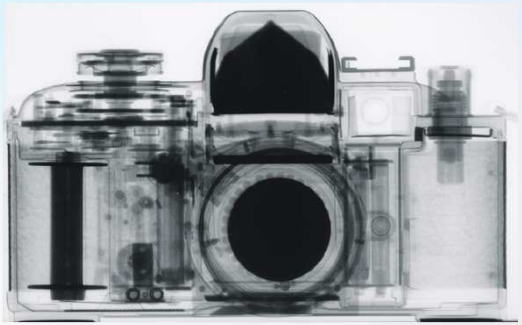

Neutron Imaging

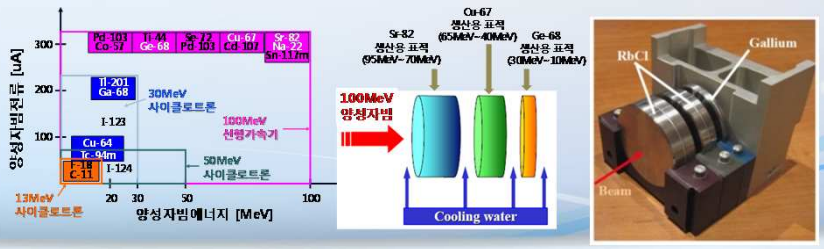

RI Production

Plan for the Secondary Particle Facility

KOMAC

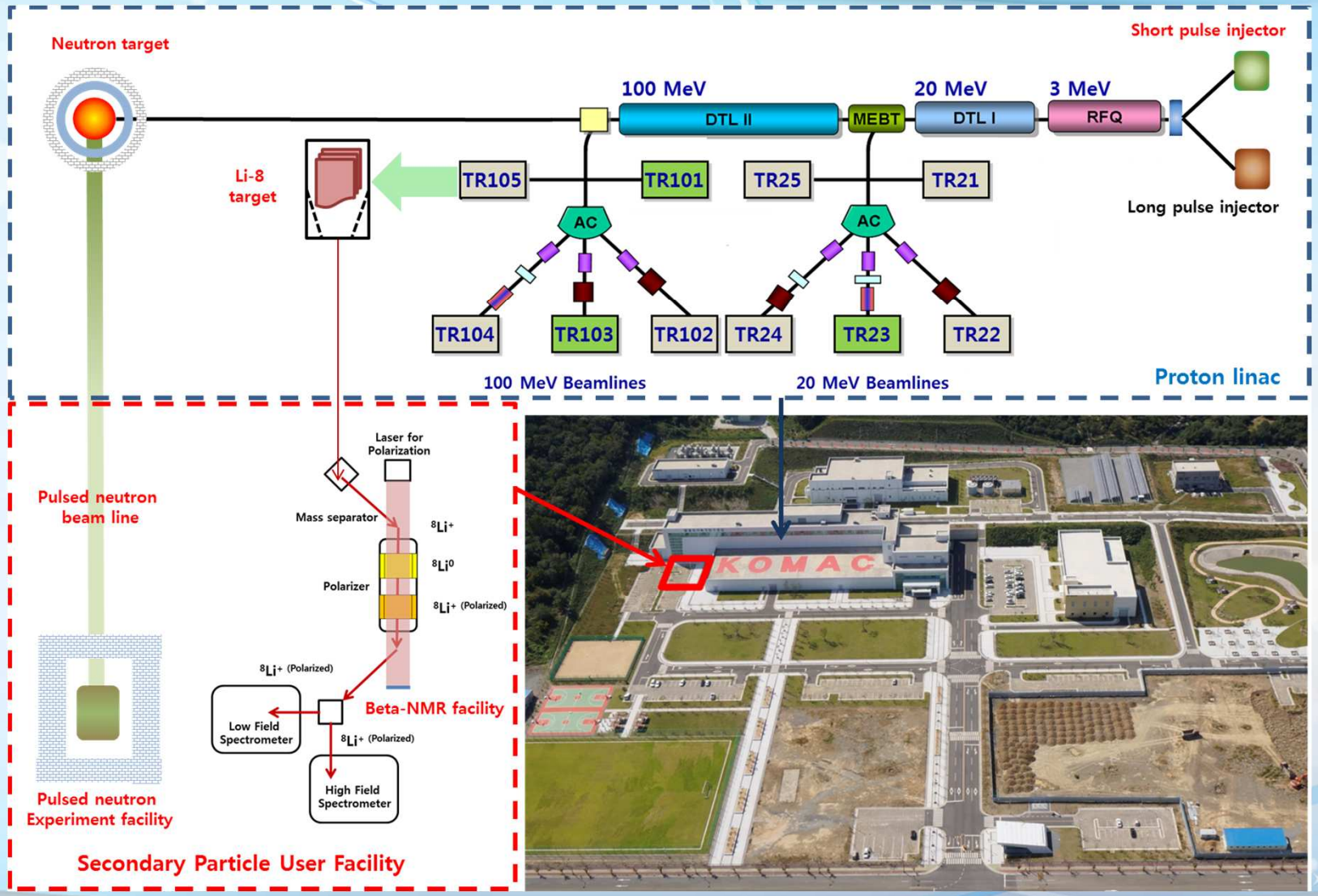

Neutron Generation Based on 100 MeV Beam

KOMAC

- Neutron yield : 0.2 n/p (Cu target), 0.37 n/p (W target)
- Neutron generation by Cu target irradiated by 100 MeV and 1 kW proton beam
  - ✓ $I_{avg.}$ = 10 μA (= 6.25 x10^{13} protons/s)
  - ✓ Neutron yield = 1.3 x10^{13} neutrons/s (time averaged)
  - ✓ Neutron flux at 1 m away from target
    : 1.03 x10^{8} n/cm^{2} s (time average), 1.03 x10^{11} n/cm^{2} s (peak, 0.1% duty)

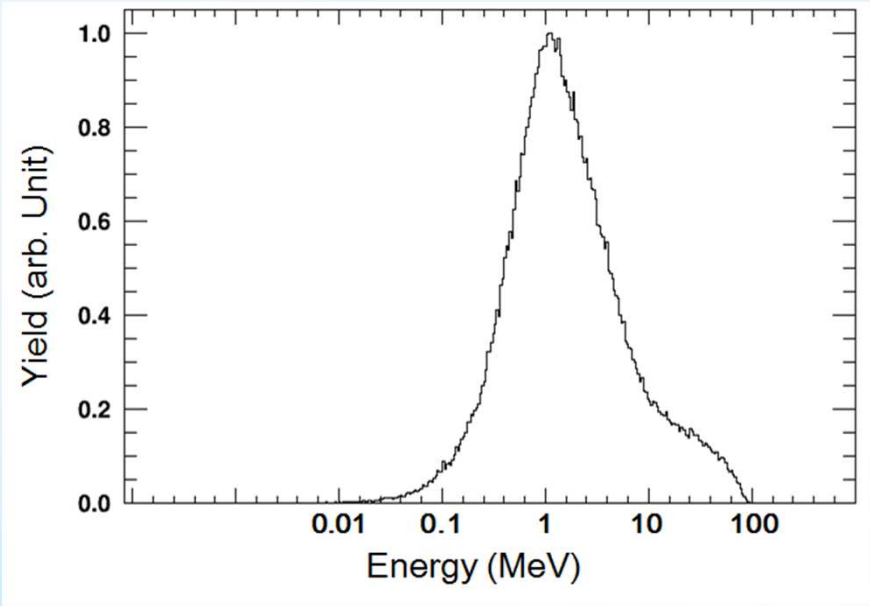

Neutron energy spectrum

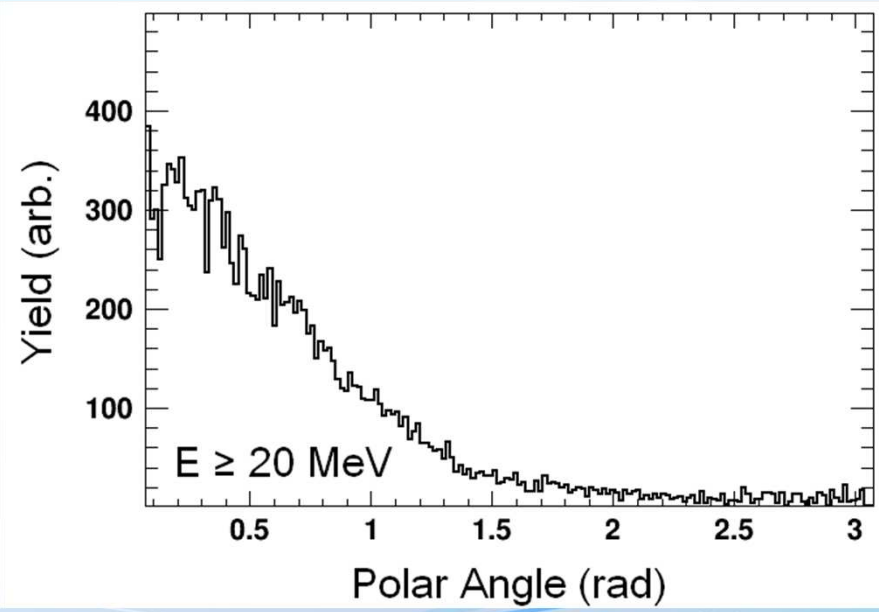

Neutron angular distribution

Neutron Target System

KOMAC

◆ Target – Moderator – Reflector (TMR)

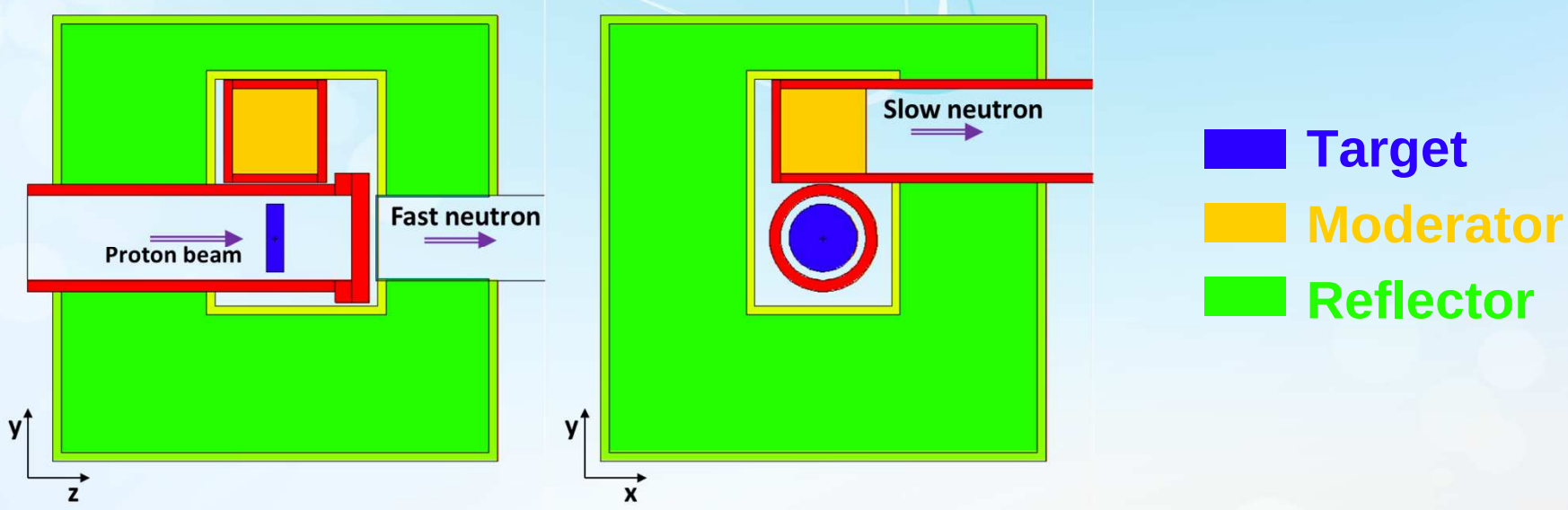

Components	Materials	Remark
Target	Tungsten	bonded with water cooled copper jacket
Moderator	TBD	Candidates : H_20, D_2O, graphite, polyethylene
Reflector	TBD	

Fast and Slow Neutron Spectrum

KOMAC

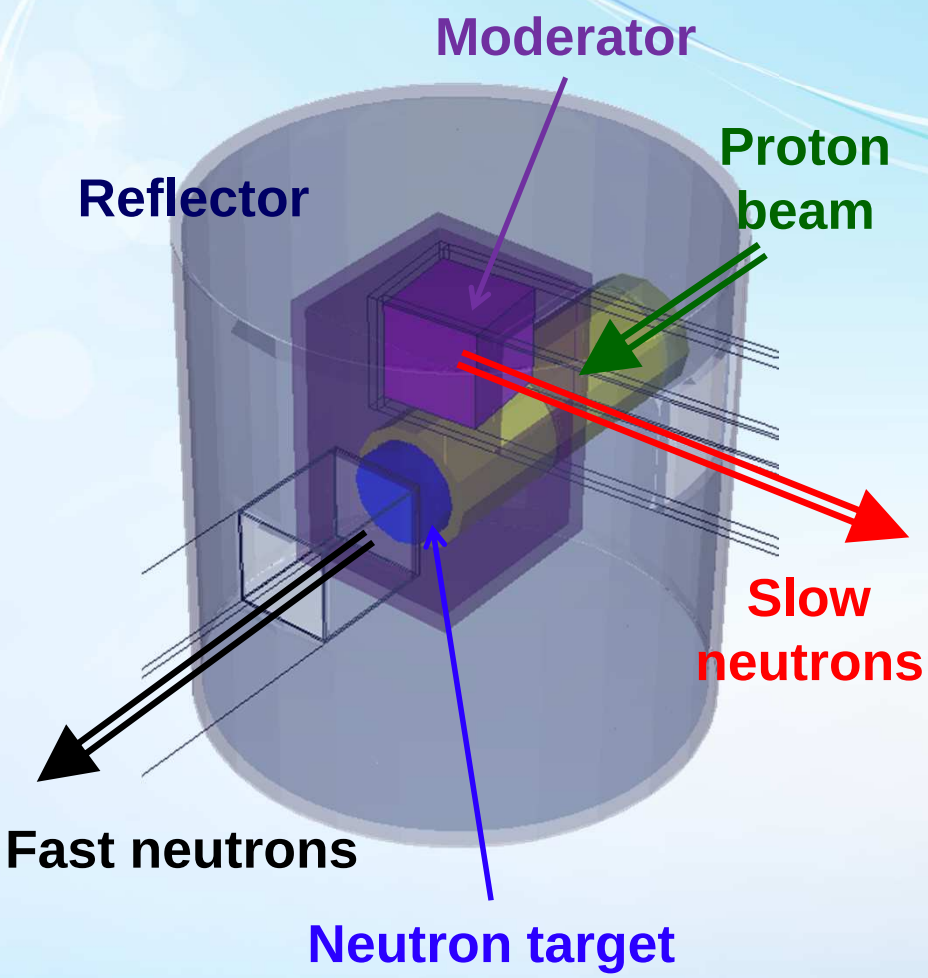

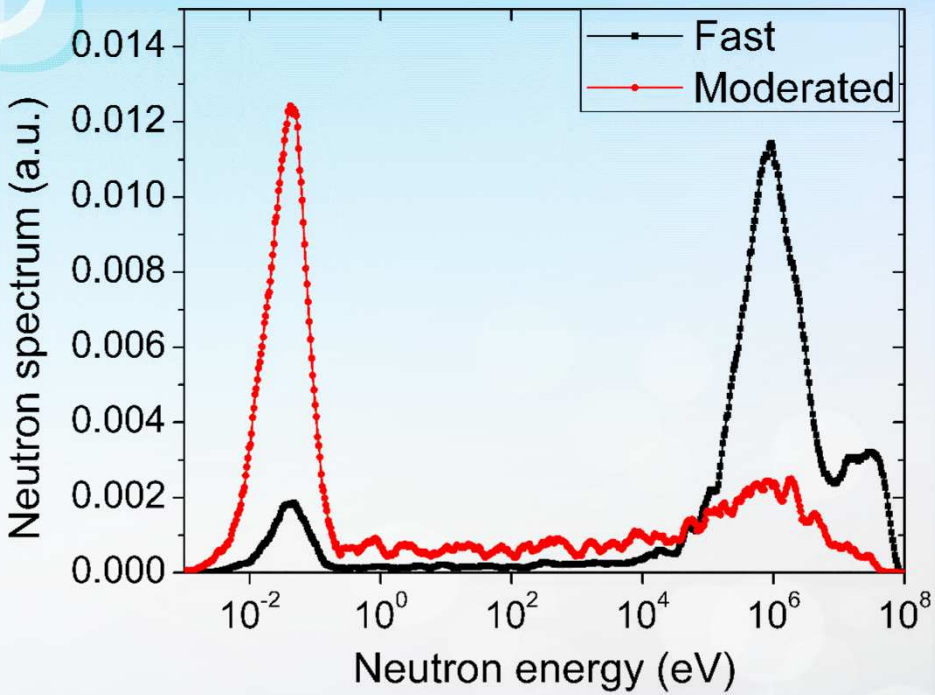

Effect of Proton Energy on Neutron Source

KOMAC

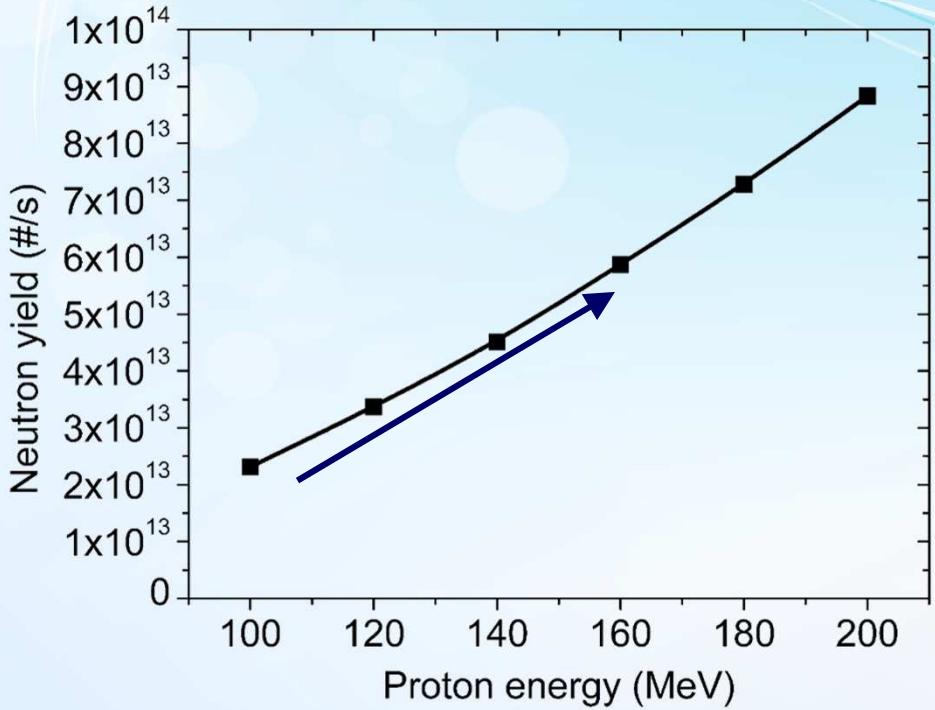

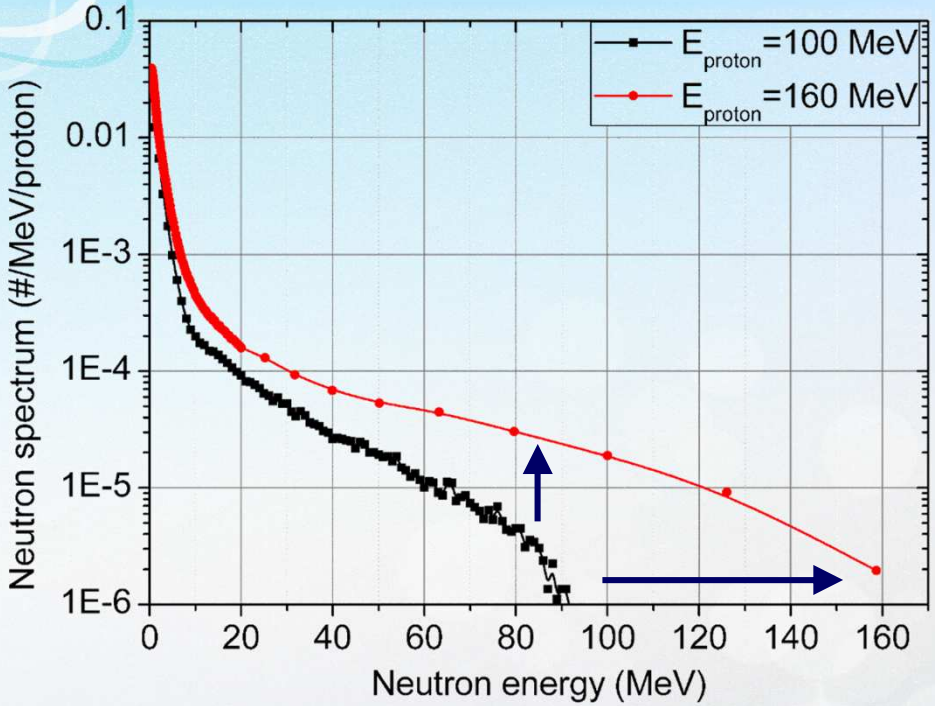

To increase neutron yield and neutron energy,

higher energy proton beam is required.

Higher Proton Energy

KOMAC

- ✓ Superconducting linac(SCL) has been developed to upgrade proton energy up to 160 MeV.
- ✓ Half Wave Resonator(HWR) cavity
- ✓ 24 cavities will be installed at existing tunnel space (end of 100-MeV linac).

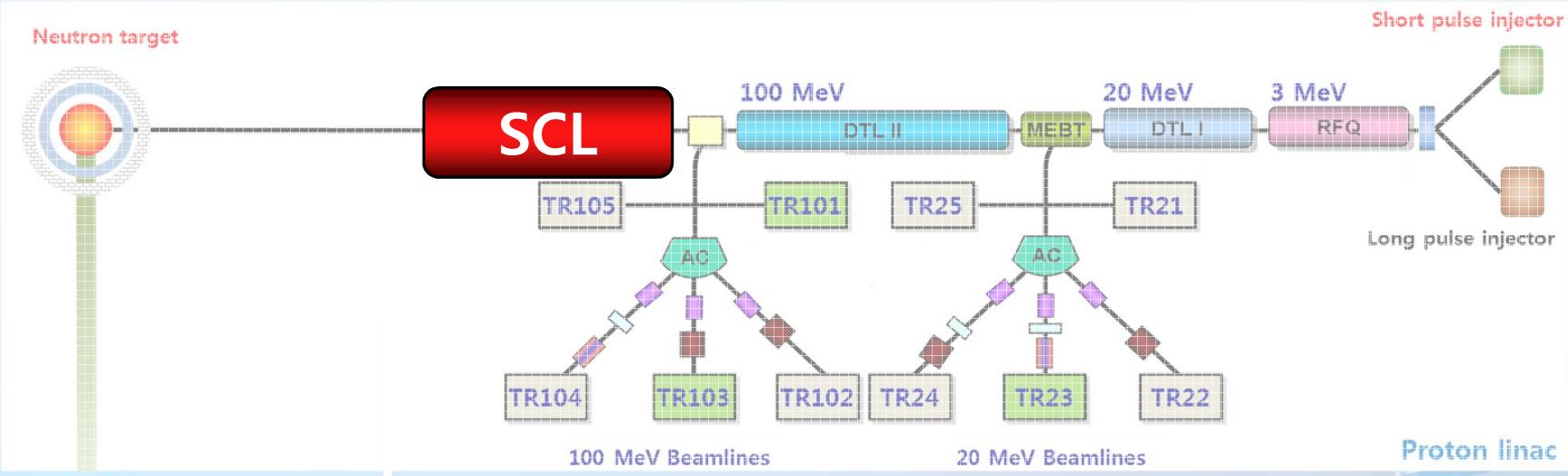

Baseline Design Concept

KOMAC

- ✓ 4 cavities / cryo-module
- ✓ External normal conducting quadrupole magnet for focusing
- ✓ Lattice: doublet
- ✓ Operation temperature: 2 K
- ✓ Cavity geometry: height ~ 0.5 * λ, diameter ~ β_g* λ, cylindrical cryo-module
- ✓ Use well proven technologies (tuner, coupler, cryo-module, etc) except HWR cavity

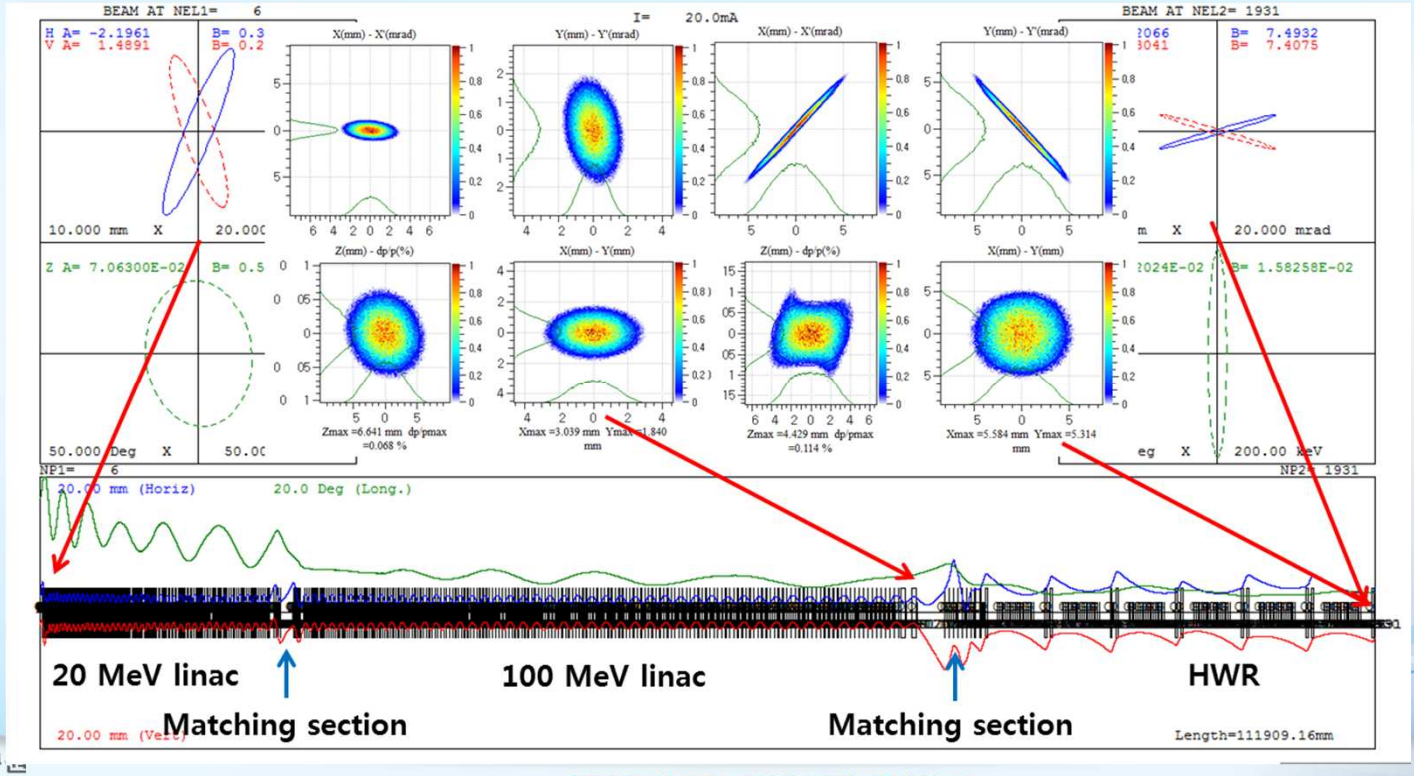

HWR Design - Baseline Design Parameter

KOMAC

✓ **Design constraint: E_{peak} < 35 MV/m**
B_{peak} < 70 mT

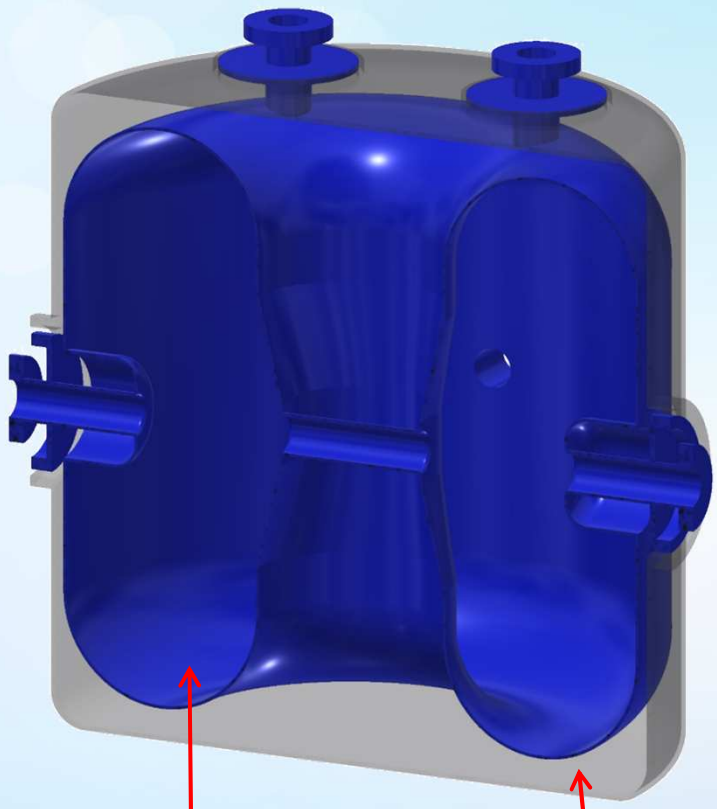

Parameter	Value	Unit
Frequency	350	MHz
Optimum β ($\beta_{opt.}$)	0.65	-
Geometric β	0.58	-
Stored energy	20.26	J
$V_{acc.}$ @ $\beta_{opt.}$	3.623	MV
V_0	4.074	MV
$E_{acc.}$ @ $\beta_{opt.}$	7.295	MV/m
E_0	8.200	MV/m
E_p	34.370	MV/m
B_p	69.680	mT
$E_p/E_{acc.}$	4.71	-
$B_p/E_{acc.}$	9.55	mT/(MV/m)
R/Q @ $\beta_{opt.}$	294.9	ohm
G	128.4	ohm
Q_0 @ R_s=20 nΩ	6.42E+09	-
Cavity loss @ R_s=20 nΩ	6.94	W
Aperture	40	mm
$L_{eff.}$	0.496799	m

HWR Design - Beam Energy

KOMAC

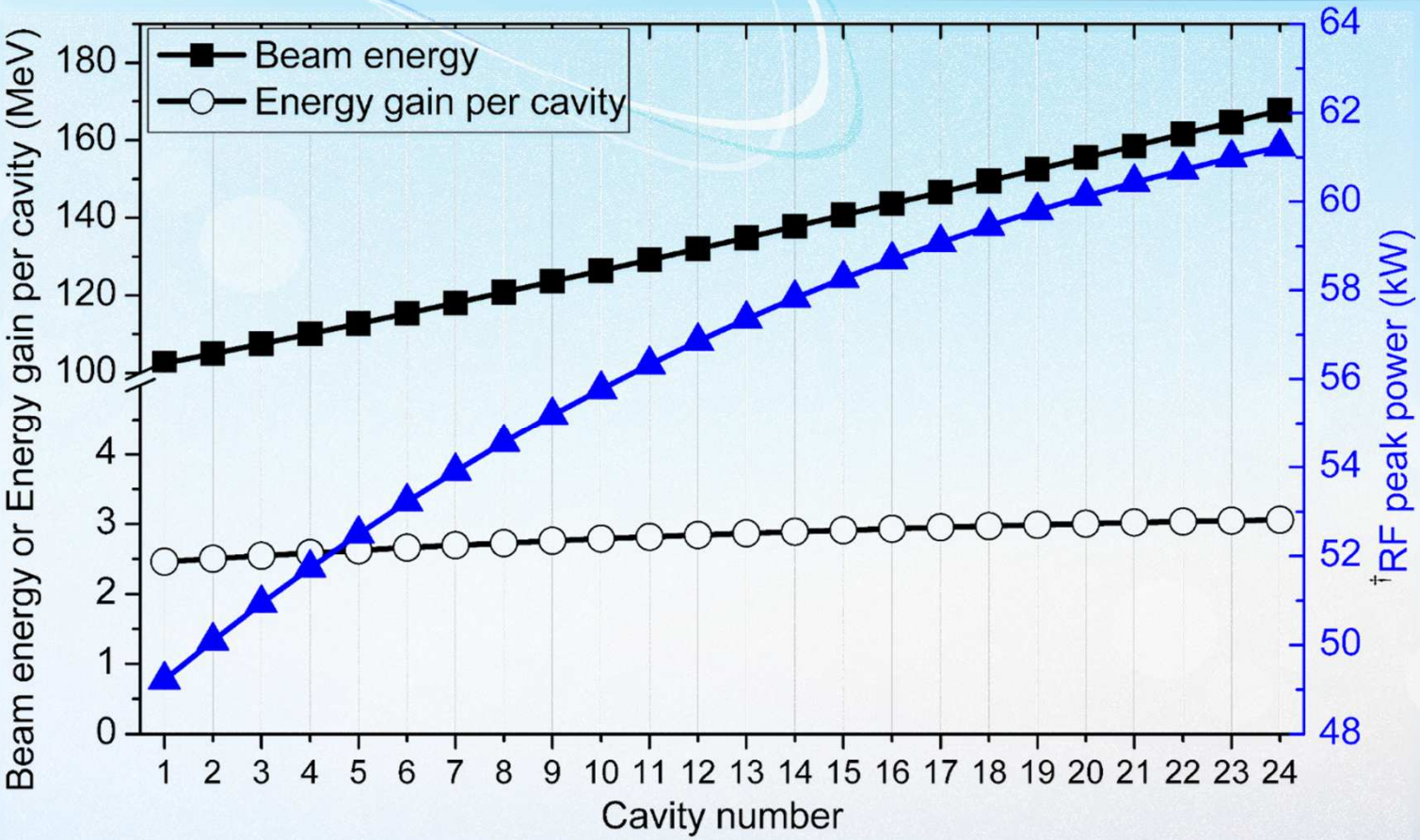

$^{\dagger}I_{beam,pk}$ = 20 mA

HWR Design - Electric and Magnetic Field

KOMAC

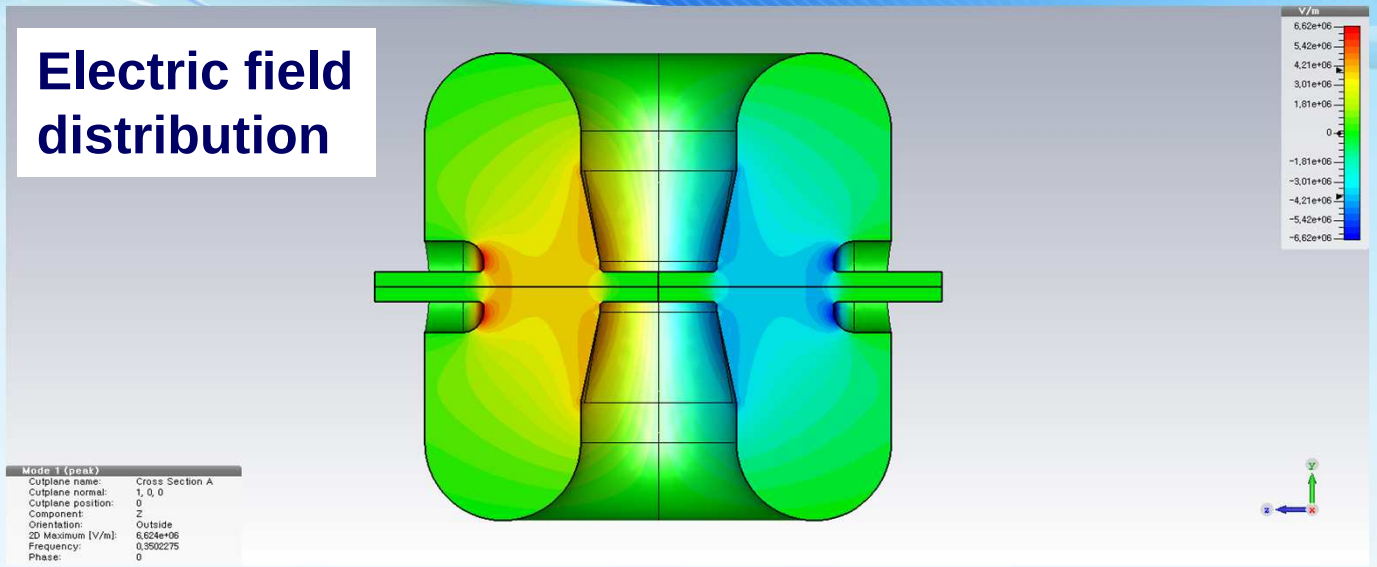

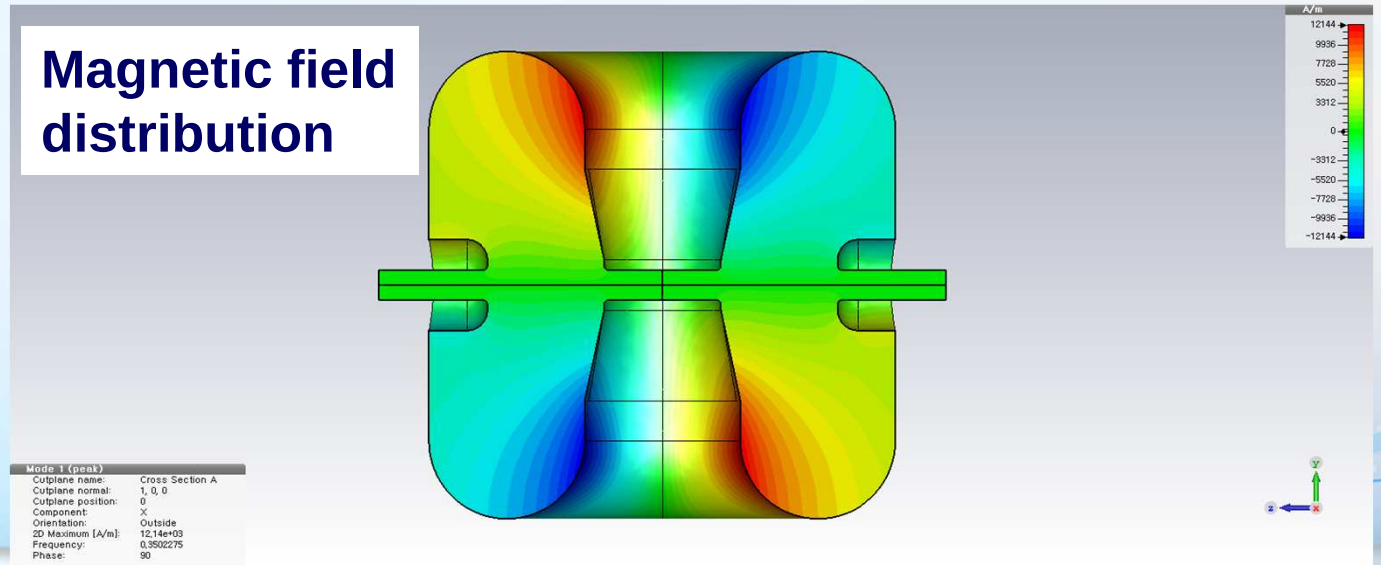

HWR Design - Mechanical Aspect

KOMAC

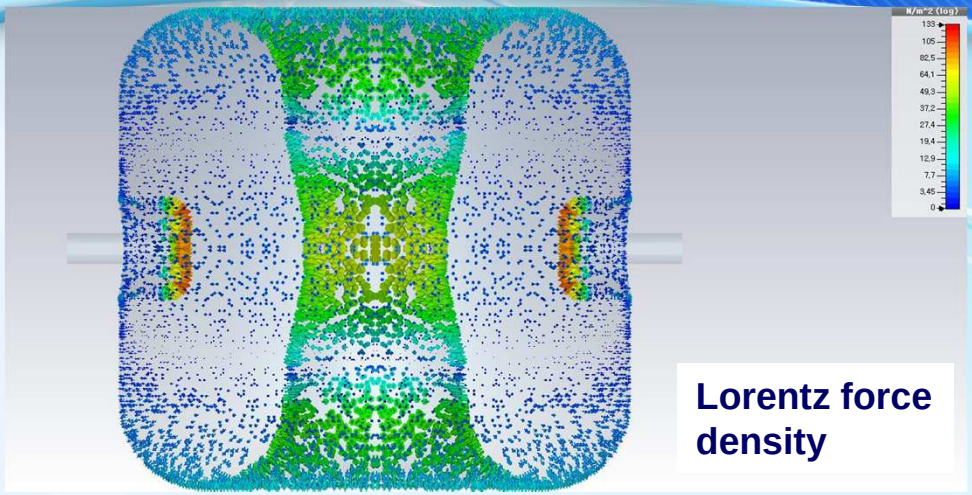

Lorentz force density

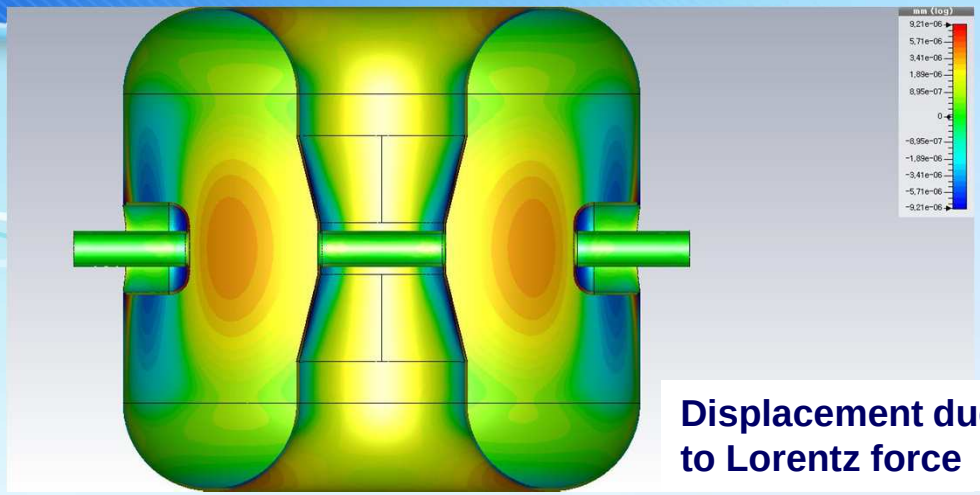

Displacement due to Lorentz force

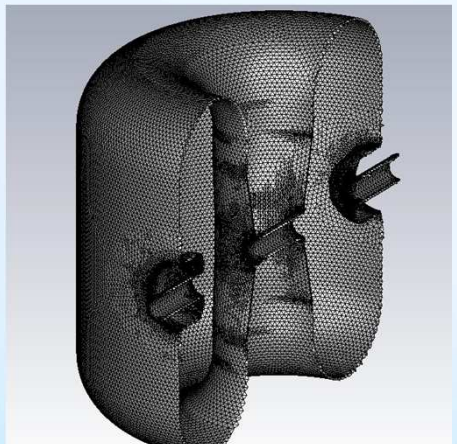

Mesh for mechanical Analysis

Wall thickness	**2.5**	**3.0**	**3.5**	**4.0**	[mm]
Lorentz Detuning	**-2.2**	**-1.7**	**-1.4**	**-1.2**	[Hz/(MV/m)^2]
He pressure sensitivity	**5.1**	**5.0**	**3.3**	**3.0**	Hz/torr
Tuning sensitivity	**88.8**	**87.1**	**89.3**	**101.3**	kHz/mm (±0.5 mm)

Cavity Tuner

KOMAC

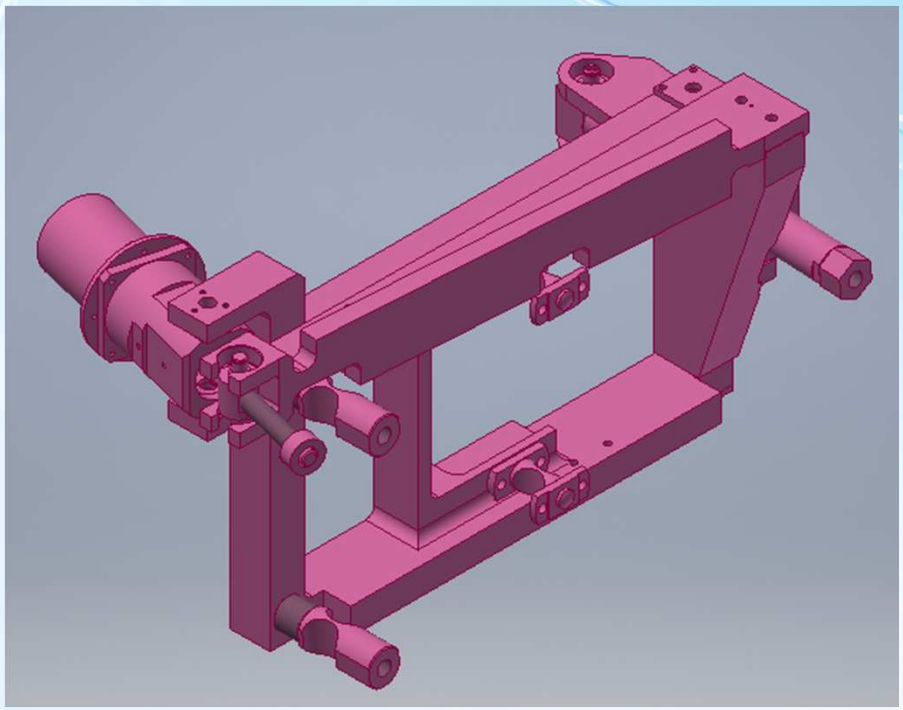

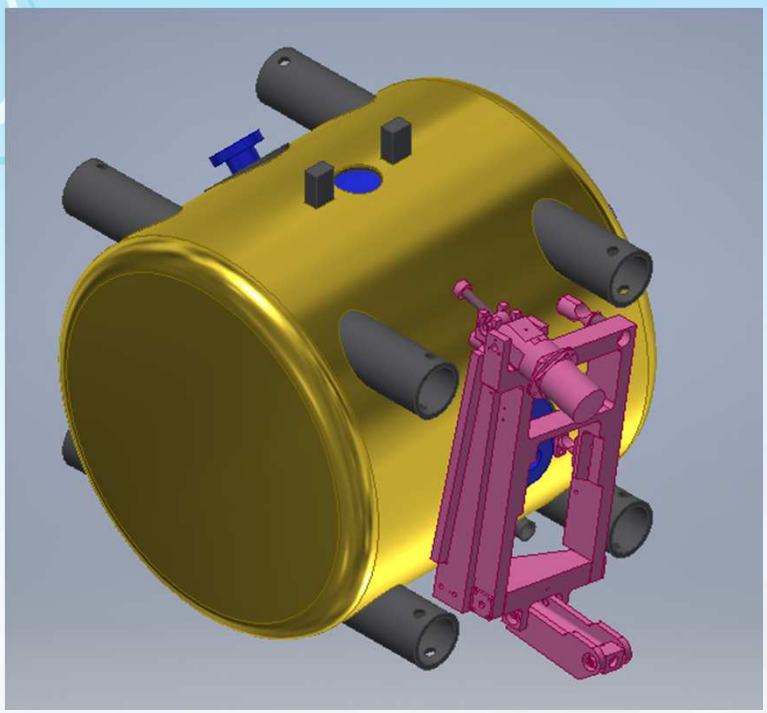

- ✓ End lever Saclay-I type (well-proven in TTF, SNS)
- ✓ Piezo tuner for fast tuning may be omitted
- ✓ Detailed mechanical analysis will be performed

RF Power Coupler

KOMAC

β = 0.51 (150 MeV), $I_{beam,pk}$ = 20 mA, Q_b = 7.74E5

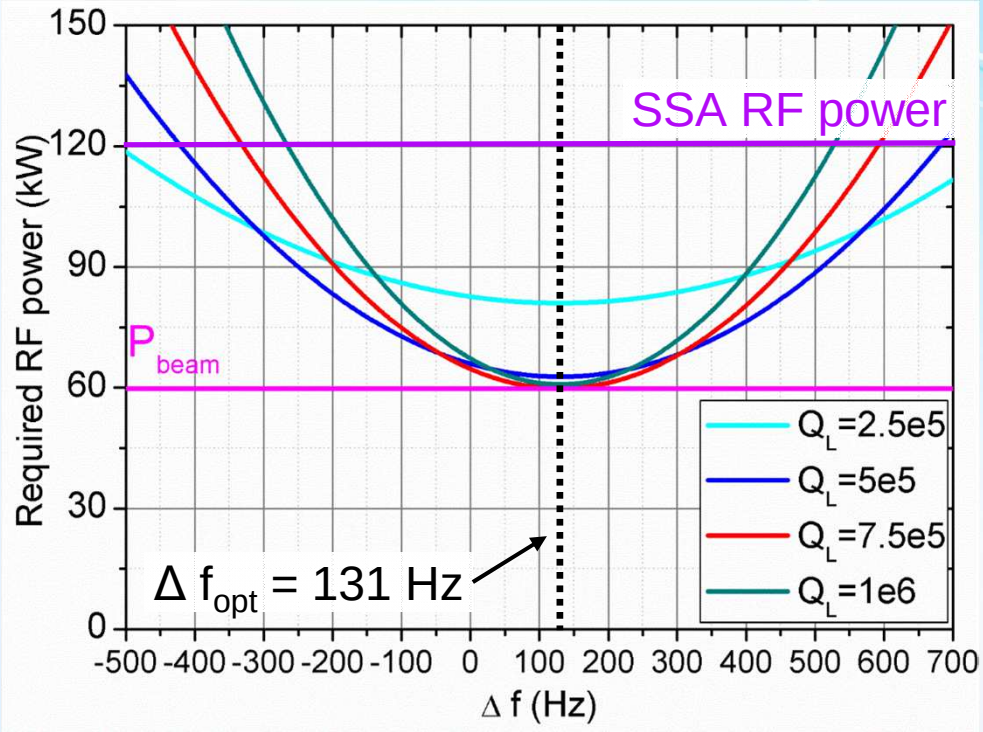

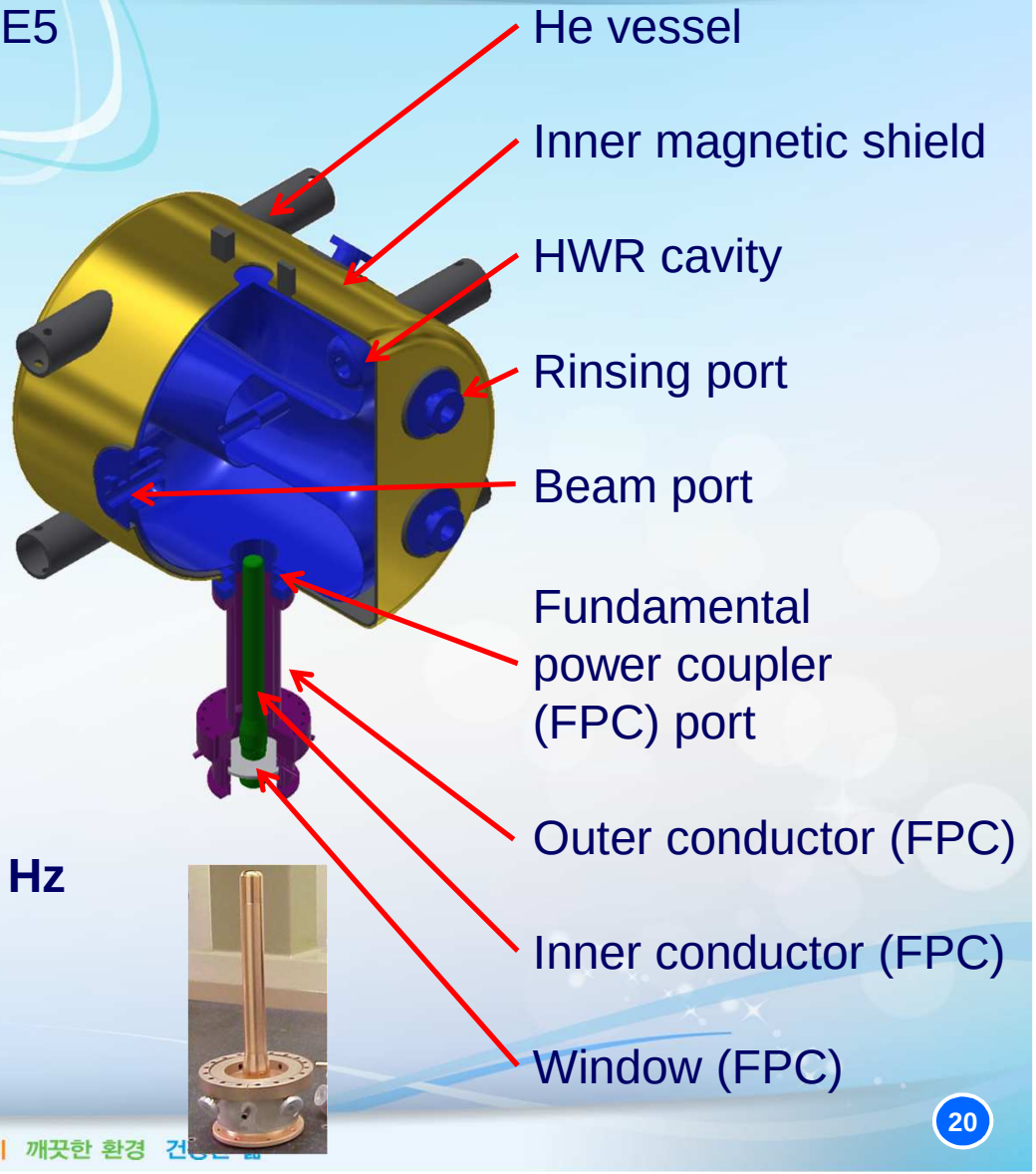

- ✓ **Max. detuning due to Lorentz force ~ 400 Hz**
- ✓ **Avoid fast tuner by large bandwidth of RF coupler and RF power margin**

High Power RF System

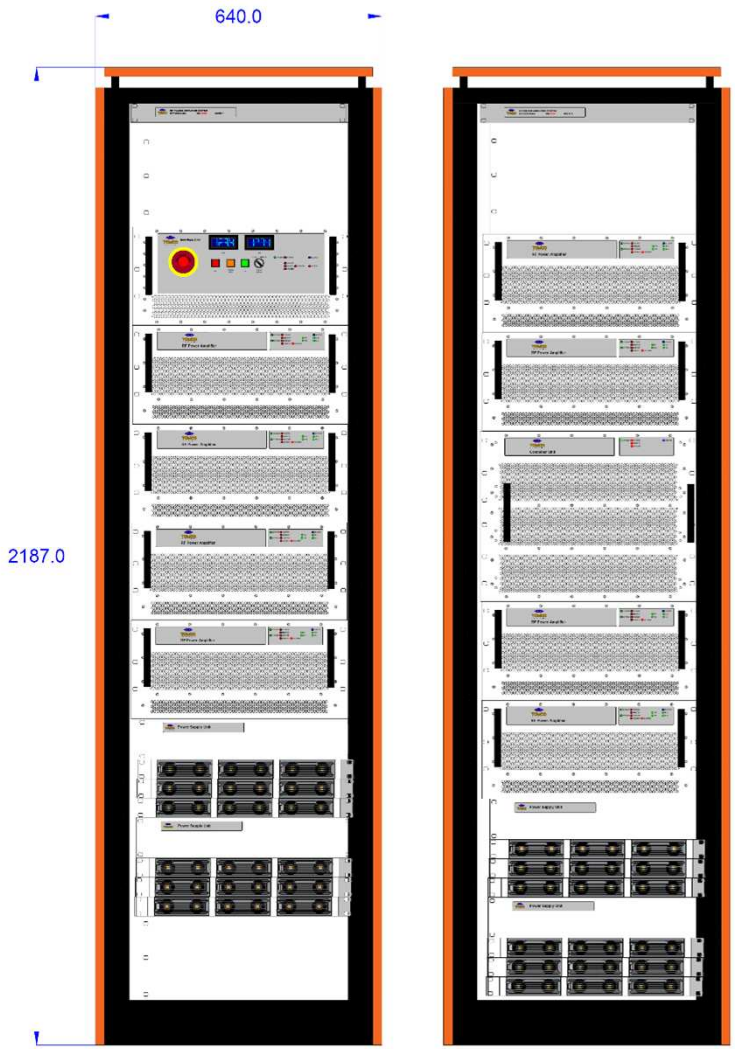

Rack 1: 4 x Amplifer Units, 1 x Interface Unit

Rack 2: 4 x Amplifer Units, 2 x Power Supply Units, 1 x 8:1 Combiner Unit

Parameter	Specification
Frequency	350 MHz
1dB bandwidth	+/- 2 MHz
Rated power	120 kW
Max. pulse width	1.6 ms
Max. duty cycle	10 %
Harmonics	Less than -30 dB
Load VSWR	Handles 1.5 mismatch
RF input signal	10 dBm for full power
Connectors	3-1/8” flange
Cooling	Forced air
Protection	Over temperature Over drive Out-of-band input Excessive VSWR

Cryo-module Design

KOMAC

- ✓ Based on SNS and CEBAF
- ✓ Cylindrical CM (cavity diameter ~ height)
- ✓ Focusing in warm region

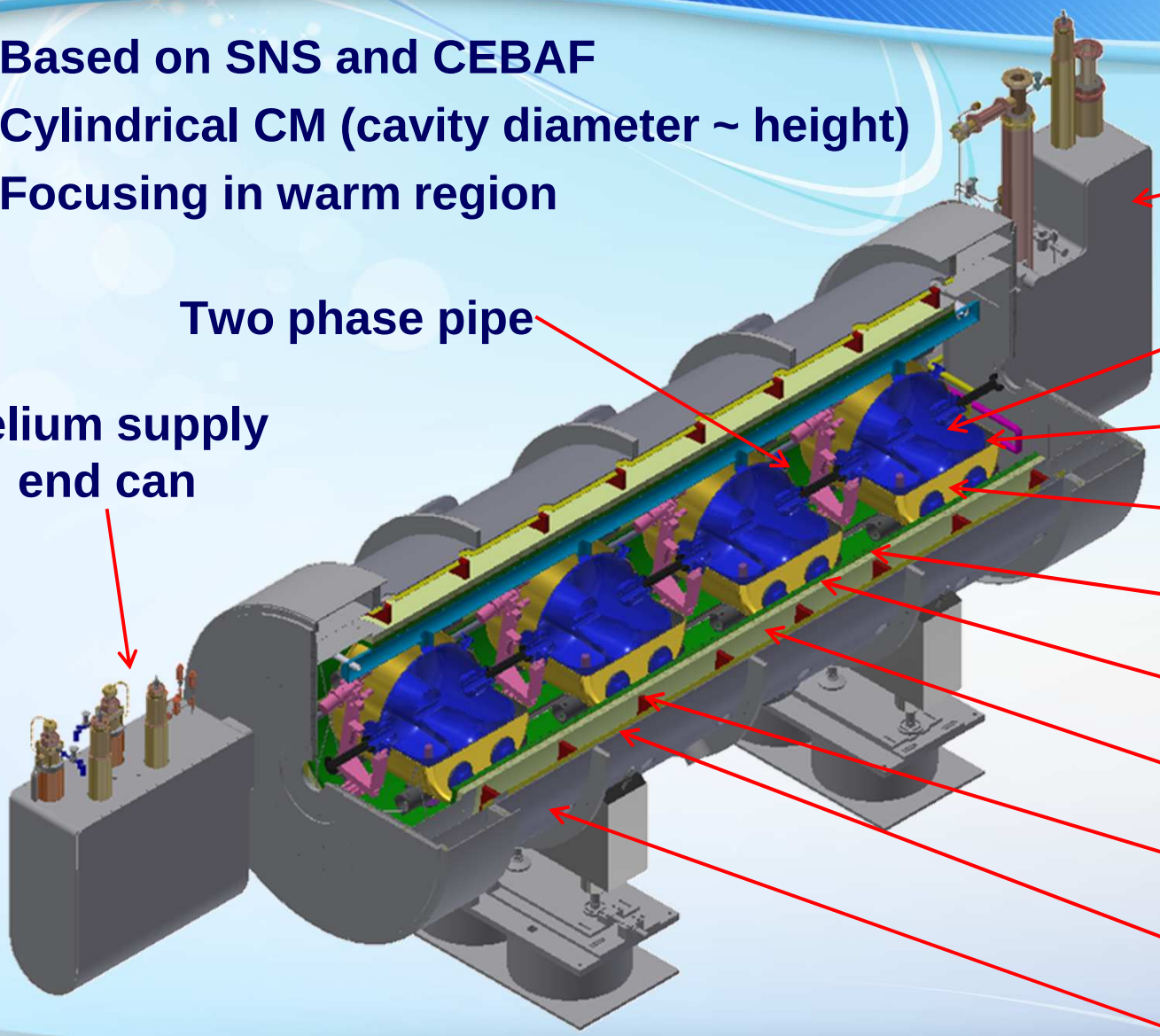

Inside Cryo-module

KOMAC

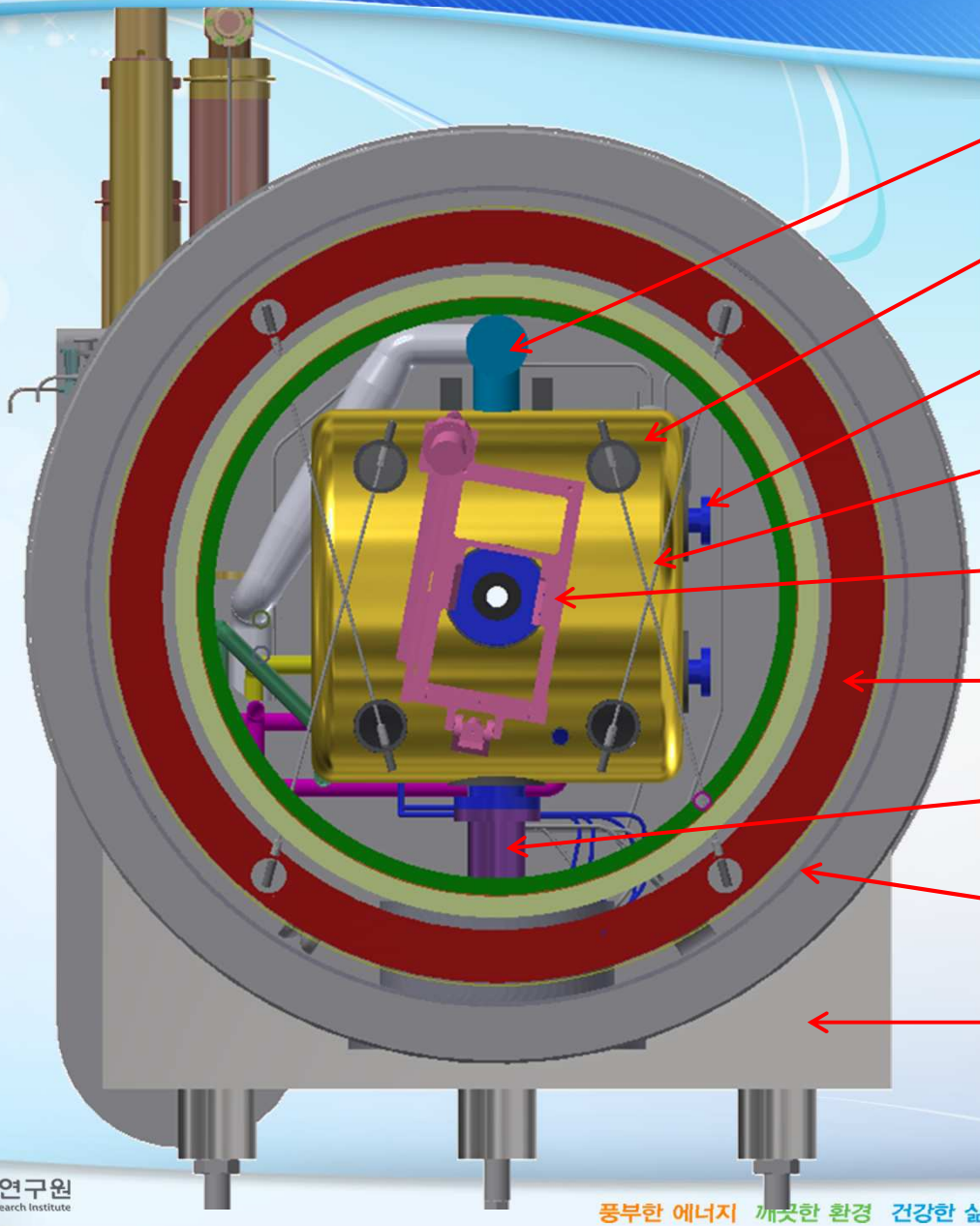

Two phase pipe

Magnetic shield (inner)

He vessel

Nitronic rod

Tuner

Space frame

RF coupler

Vacuum vessel

Support

Summary

KOMAC

- KOMAC Prepares secondary particle utilization
  - ✓ Secondary particle utilization expands application fields of 100-MeV linac
  - ✓ Pulsed neutron for neutron-related science and technology
  - ✓ RI for medical imaging and Li-8 beam for beta-NMR (advanced surface analysis)

- R&D Status for Neutron Source
  - ✓ Neutron generation, numerical study and measurement were conducted.
  - ✓ Development of Target-Moderator-Reflector (TMR) system
  - ✓ Development of superconducting linac for higher proton energy

Thank you