TRIUMF

Canada's national laboratory
for particle and nuclear physics
and accelerator-based science

ARIEL: TRIUMF'S ADVANCED RARE ISOTOPE LABORATORY

Nov. 17, 2017

Bob Laxdal
Deputy Assoc. Lab Director
Accelerators, TRIUMF

TRIUMF was founded in 1968 and has delivered nearly 50 years of science and innovation for Canada

400 staff

200 students & post-doctoral researchers

650 scientist & student researcher visits per year

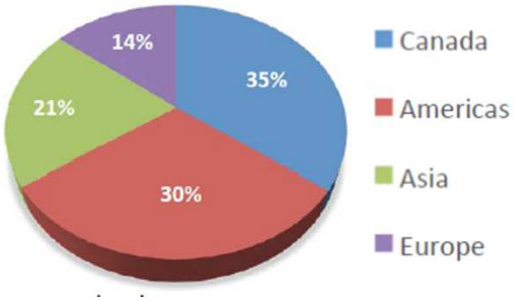

TRIUMF – Historical Perspective

- 500MeV cyclotron since 1974
  - One of three Meson factories built at that time – including LAMPF and PSI
  - ~300µA distributed to multiple beamlines
- ISAC since 1995
  - Radioactive ion beam (RIB) facility
  - Driven by 500MeV protons from cyclotron
- ARIEL in progress (2010->)

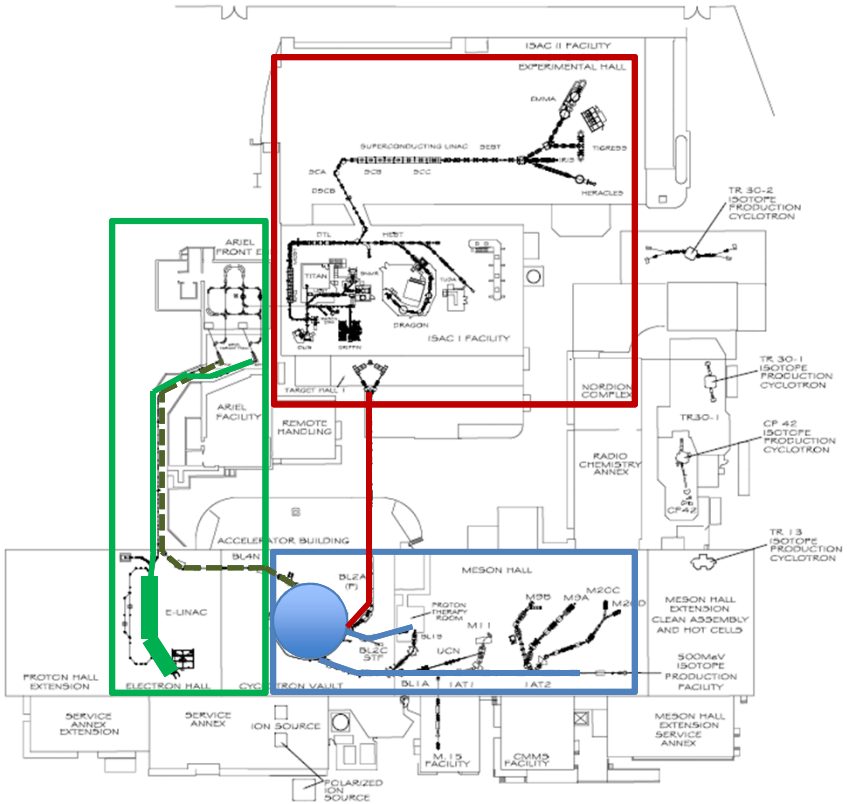

TRIUMF 500 MeV H^- Cyclotron

- In operation since 1974
- H^- extraction by stripping:
  - multi-user (present normal operation is 3 beams simultaneously)
  - multi-energy (70 – 520 MeV)
  - variable intensity (10 pA – 300 uA)
- Future
  - ARIEL plan is to extract a fourth simultaneous beam as a driver for one ARIEL target station

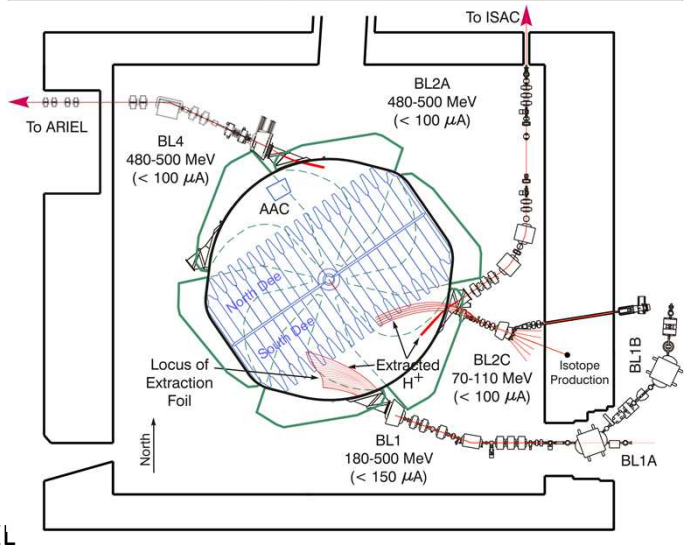

ISAC – ISOL Facility at TRIUMF

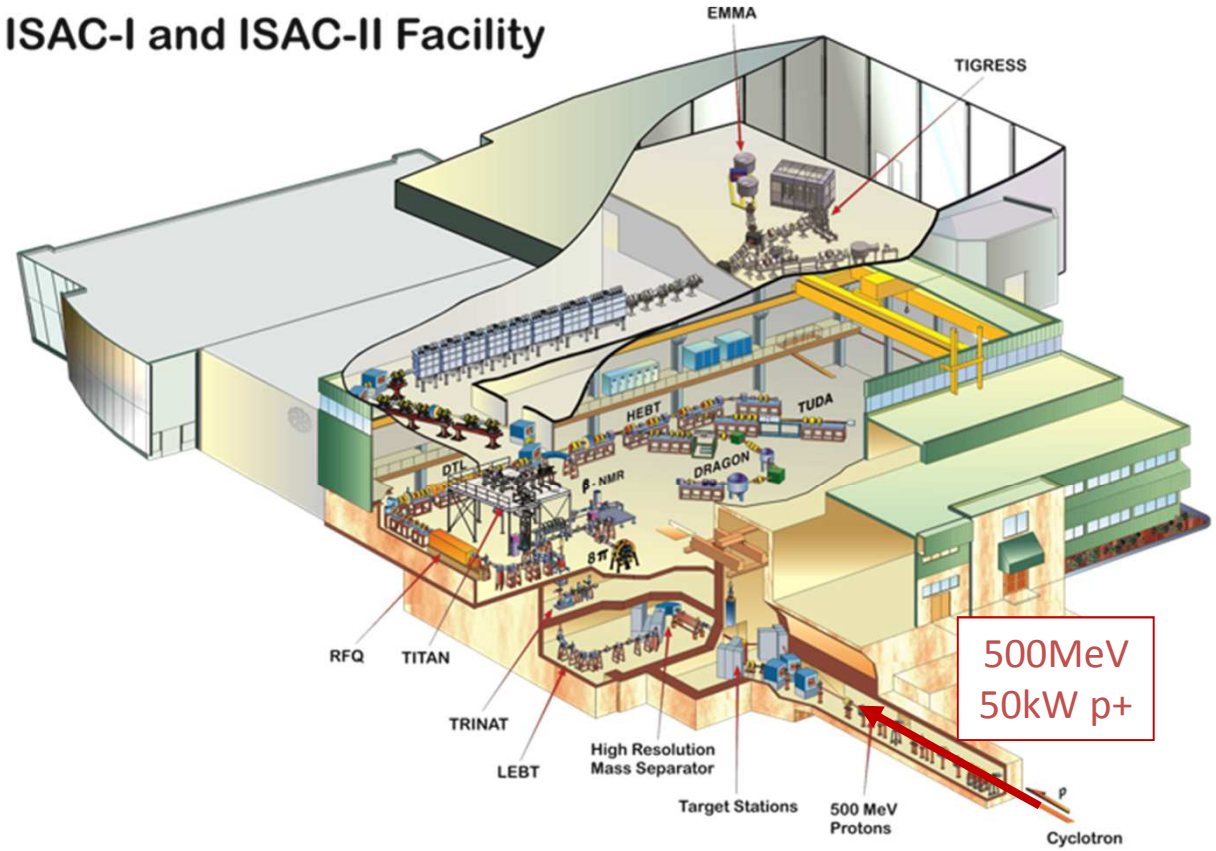

- Highest power ISOL (isotope separator on-line) facility in the world – 50kW protons
- Two underground target stations
- Proton beam sent to one target station while preparing the other target station
- RIBs sent to low energy experiments or accelerated in ISAC linear accelerators to medium and high energy experiments

ISAC – Post accelerators

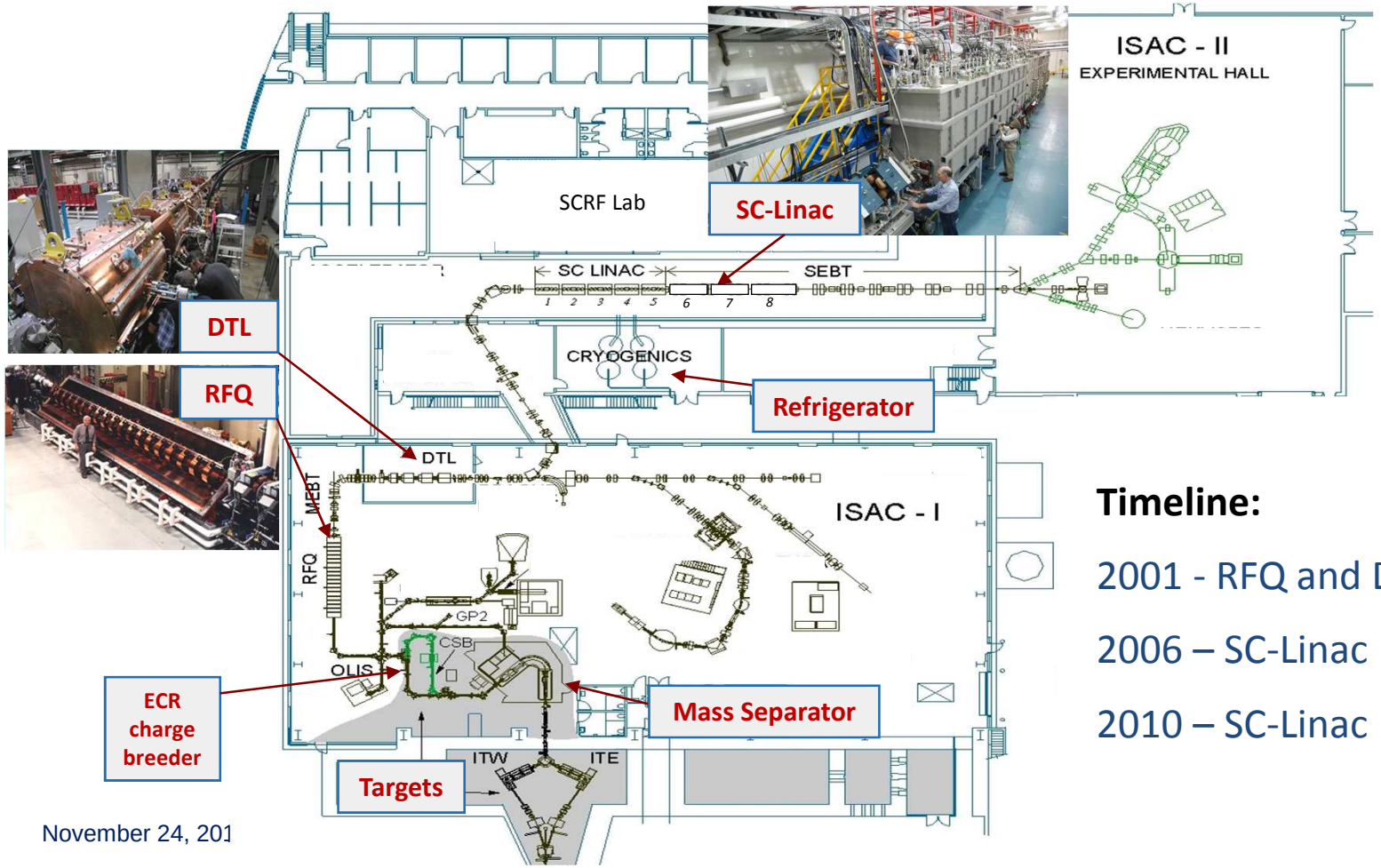

Timeline:

2001 - RFQ and DTL operational

2006 – SC-Linac Phase 1 – 20MV

2010 – SC-Linac Phase 2 – 20MV

ISAC Post – Accelerators

Room temperature heavy ion linac

- 35 MHz RFQ
  - A/q ≤ 30 E=150 keV/u
- 106MHz DTL
  - 2≤A/q ≤ 6.5 MeV/u
  - 0.15 ≤ E ≤ 1.8 MeV/u

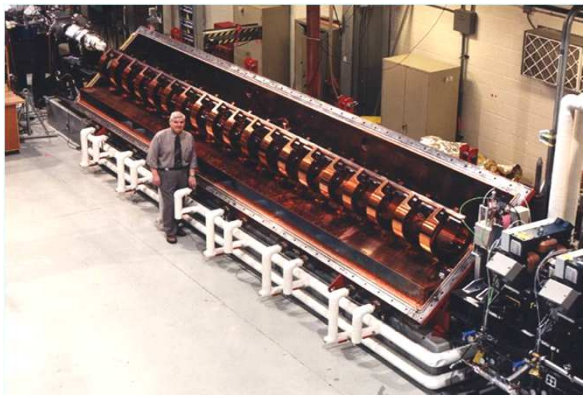

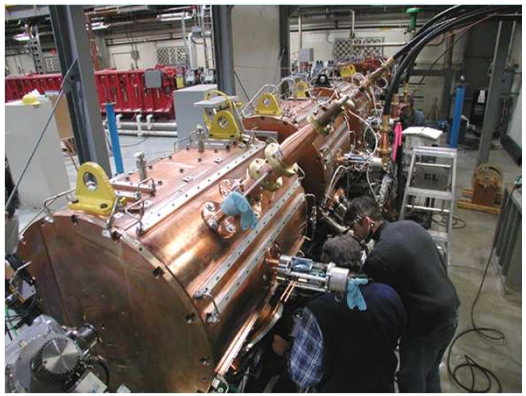

Superconducting heavy ion linac

- 106 & 141 MHz SC-Linac
  - 40 MV
  - A/q=6 E ≤ 6 MeV/u
  - A/q=3 E ≤ 15 MeV/u

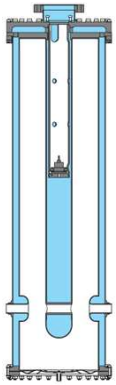

ISAC Target Hall

- Target Hall – contains target areas, hot storage, and hot cells
- Two target stations (ITE, ITW), alternating operation with ~4 weeks/target
- Area serviced by overhead crane –> target exchange is done in the hot cell
- Target container installed in source tray at the bottom of the target module – non-hermetic geometry
- Routine target materials: UC_x, SiC, TaC, Ta, NiO, Nb, ZrC, TiC

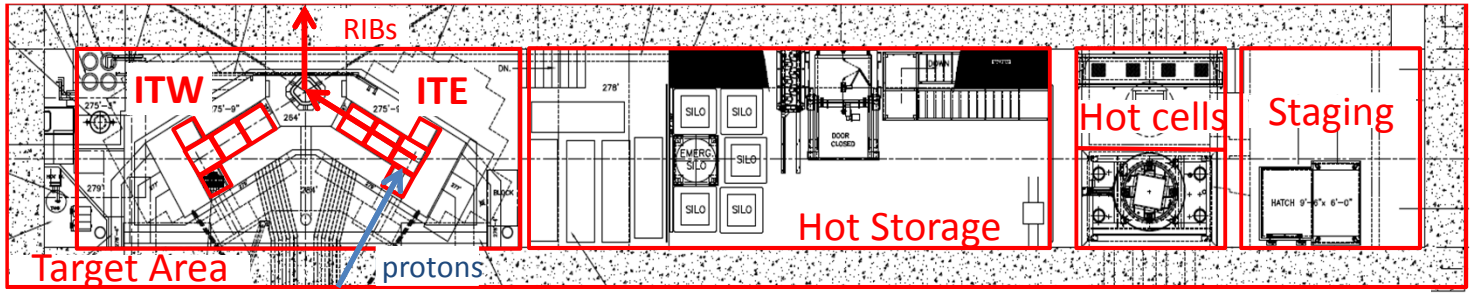

Plan view of the ISAC target hall – an overhead crane moves modules in the hall

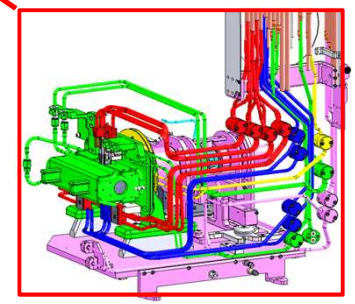

Source Tray

ARIEL

Advanced Rare IsotopE Laboratory (2010-2023)

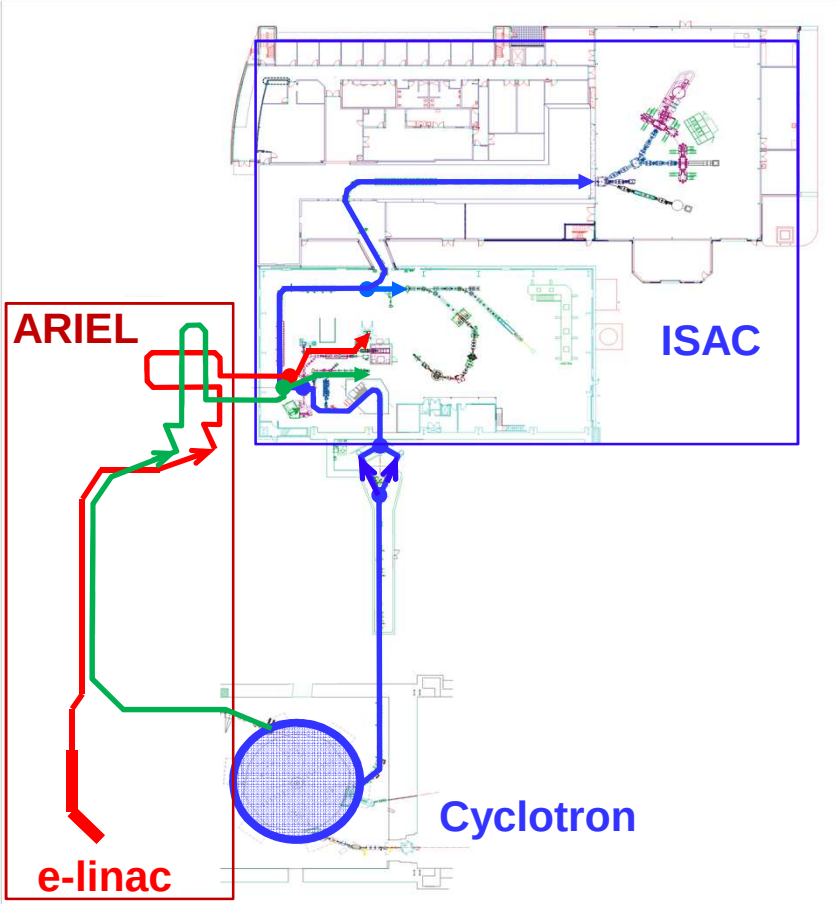

- ISAC: World class ISOL facility for the production and acceleration of rare isotope beams (RIB) - Presently utilize one driver beam at 500MeV and 50kW to create RIBs for ISAC
- Limitation: many end stations but only one radioactive ion beam
- ARIEL will allow up to three simultaneous RIB beams for ISAC
- Add e-Linac (50MeV 10mA cw - 1.3GHz SC linac) as a second driver to create RIBs via photofission
- Add a second driver beam from the cyclotron

ARIEL - Staging

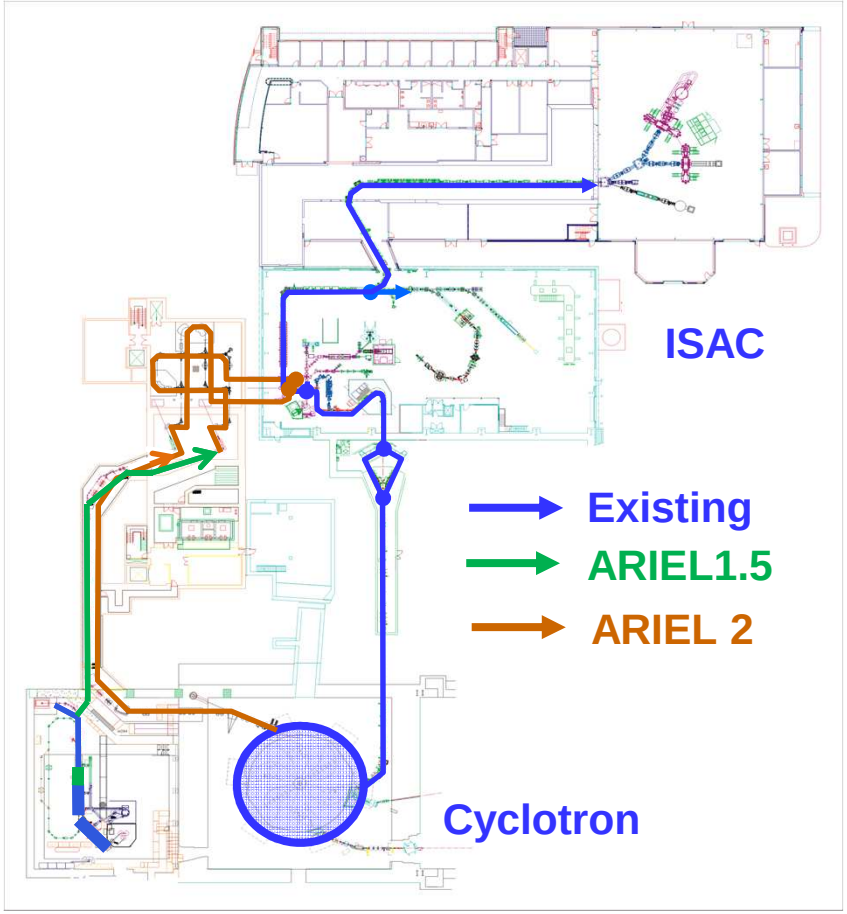

ARIEL in stages

- ARIEL1
  - E-Linac demonstration at 20MeV (2 cavities) - 2014
- ARIEL1.5
  - Complete e-Linac to 30MeV (add third cavity)
    - installation done – rf commissioned - 2017
    - Beam commission and ramp up in 2018
    - Complete e-beamline – 2018
- ARIEL2
  - Install electron target station and RIB lines
    - RIB lines & EBIS 2018, target station 2018-2020
  - Install BL4N proton beamline, proton target station and RIB lines
    - RIB lines 2019, BL4N & target station 2020-2022

New ARIEL Building Constructed

- A new building was added in 2013.
- In total ARIEL represents a 100M$ investment by the Federal and Provincial Canadian governments

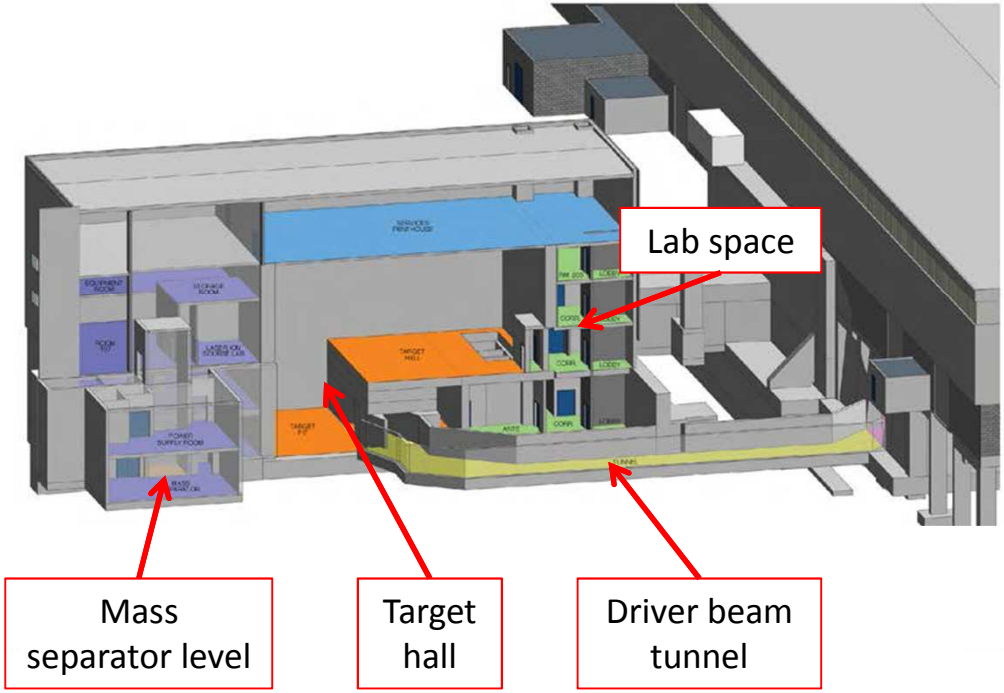

ARIEL-I - e-Linac Driver

Why 50MeV Electrons?

- The electron linac driver complements the existing proton cyclotron driver
  - Photofission yields high production of many neutron rich species with relatively low isobaric contamination with respect to proton induced spallation
  - An energy of 50MeV is sufficient to saturate photo-fission production – 30MeV is acceptable

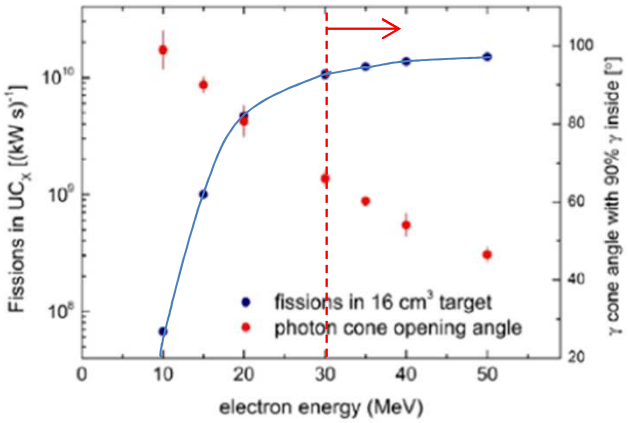

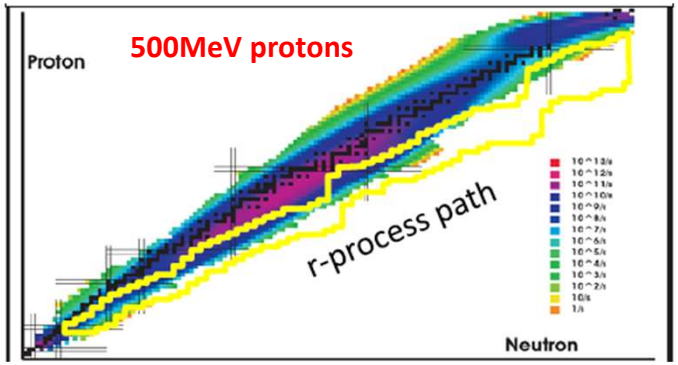

Calculated in-target production for 10 µA, 500 MeV protons incident on a 25 g/cm2 UCx target

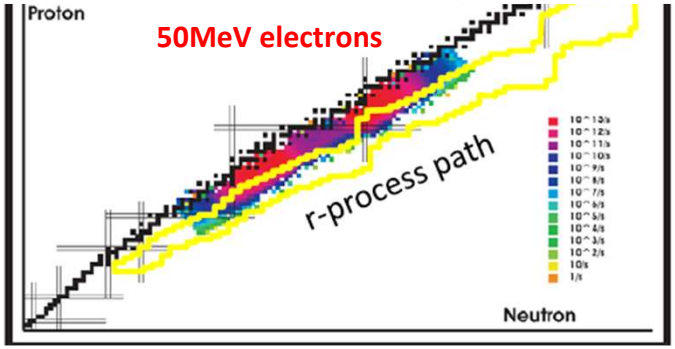

Calculated in-target production for 10 mA, 50 MeV electrons incident on a Hg converter and 15 g/cm2 UCx target

ARIEL 50MeV e-Linac

- Photo-fission is relatively inefficient so requires high intensity
  - Set e-Linac requirements at 10mA cw at 50MeV (500kW)
- Choose a Linac with five cavities each providing 10MeV divided into three cryomodules with a staged installation
  - Phase I – two cavities in two modules (ICM, ACM1) for a demonstration acceleration in September 2014
  - Phase 2 – three cavities in two cryomodules – 30MeV for initial production at up to 100kW to ease target engineering
  - Phase 3 – final configuration – as funding allows

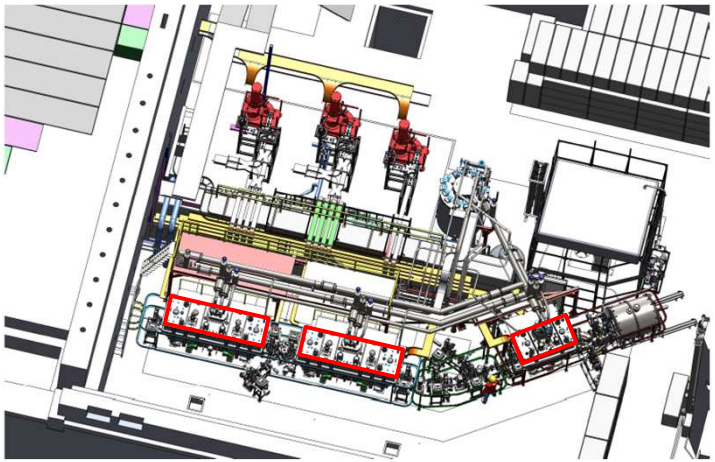

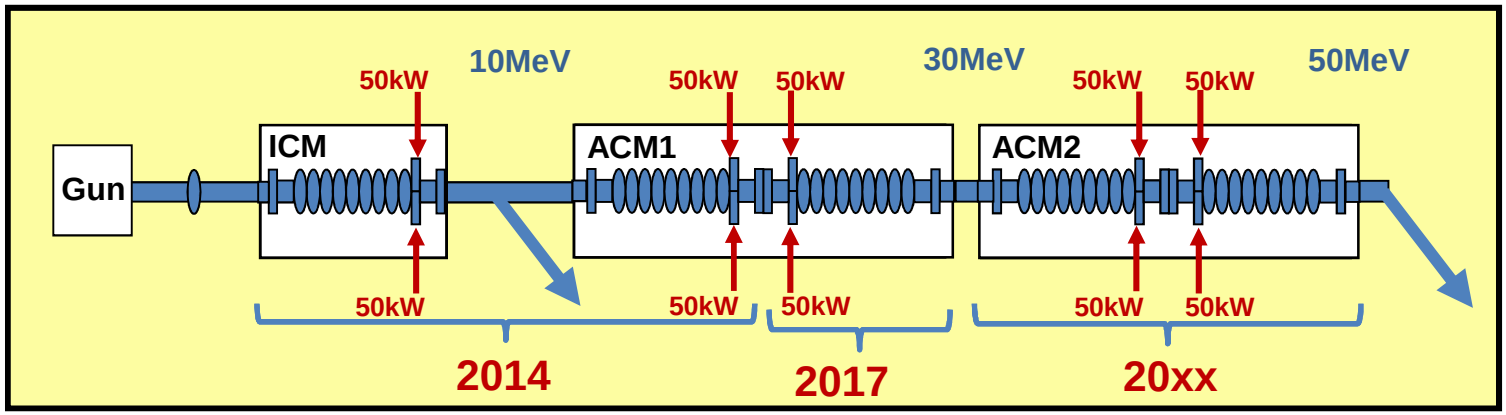

ARIEL cavities

- 1.3GHz nine-cell elliptical cavities
- End groups modified to accommodate two 50kW couplers and to reduce trapped modes
- CESIC and SS passive coaxial dampers used to suppress HOMs to <BBU limit*

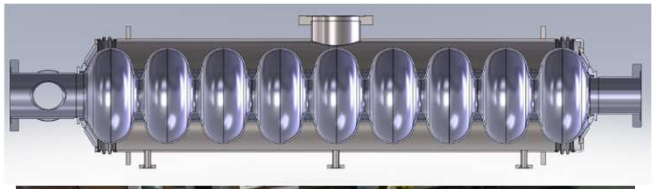

Parameter	Value
Active length (m)	1.038
RF frequency	1.3e9
R/Q (Ohms)	1000
Q_0	1e10
E_a (MV/m)	10
P_{cav} (W)	10
P_{beam} (kW)	100
Q_{ext}	1e6
Q_L*R_d/Q of HOM	<1e6

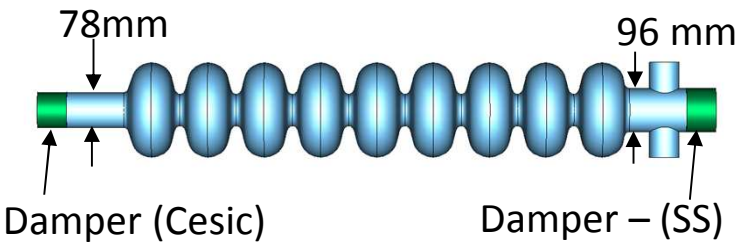

* P. Kolb, et al: Cold tests of HOM absorber material for the ARIEL eLINAC at TRIUMF, http://dx.doi.org/10.1016/j.nima.2013.05.031.

ARIEL Cryomodules

Houses

- One/two nine-cell 1.3GHz cavity
- Two/four 50kW power couplers
- HOM coaxial dampers

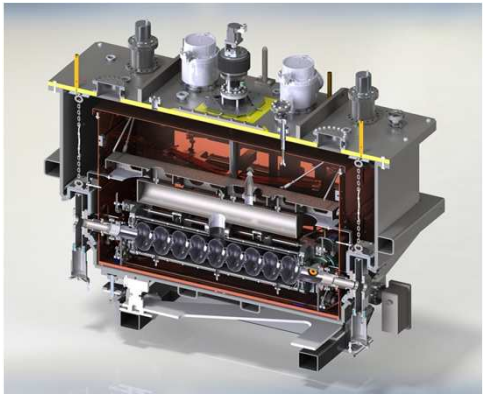

Features

- 4K/2K heat exchanger with JT valve on board – allows standard 4K cold box
- scissor tuner with warm motor
- LN2 thermal shield – 4K thermal intercepts via syphon
- Two layers of mu-metal
- WPM alignment system

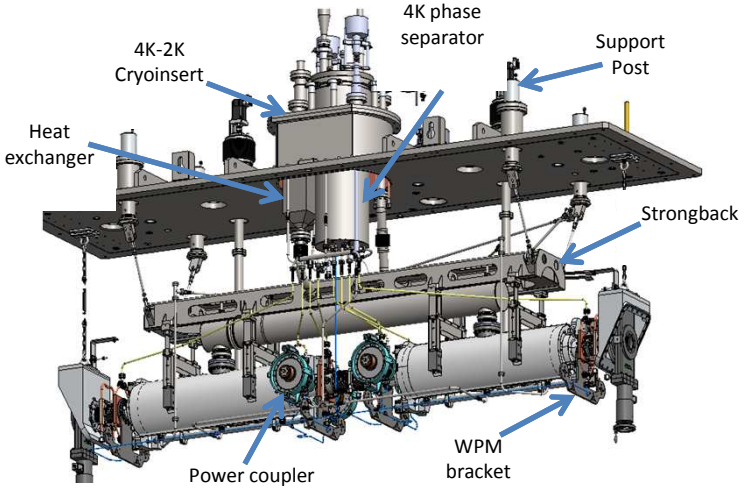

Cryomodule Cold test results

Parameter	ICM	ACM
4K static load	6.5	8.5
2K static load	5.5	11
77K static load	<130	<130
2K efficiency	86%	86%

- ✓ Cavities meet specification
- ✓ Cryogenic engineering matches design expectations
- ✓ 2K production efficiency 86%
- ✓ Syphon loop performance characterized

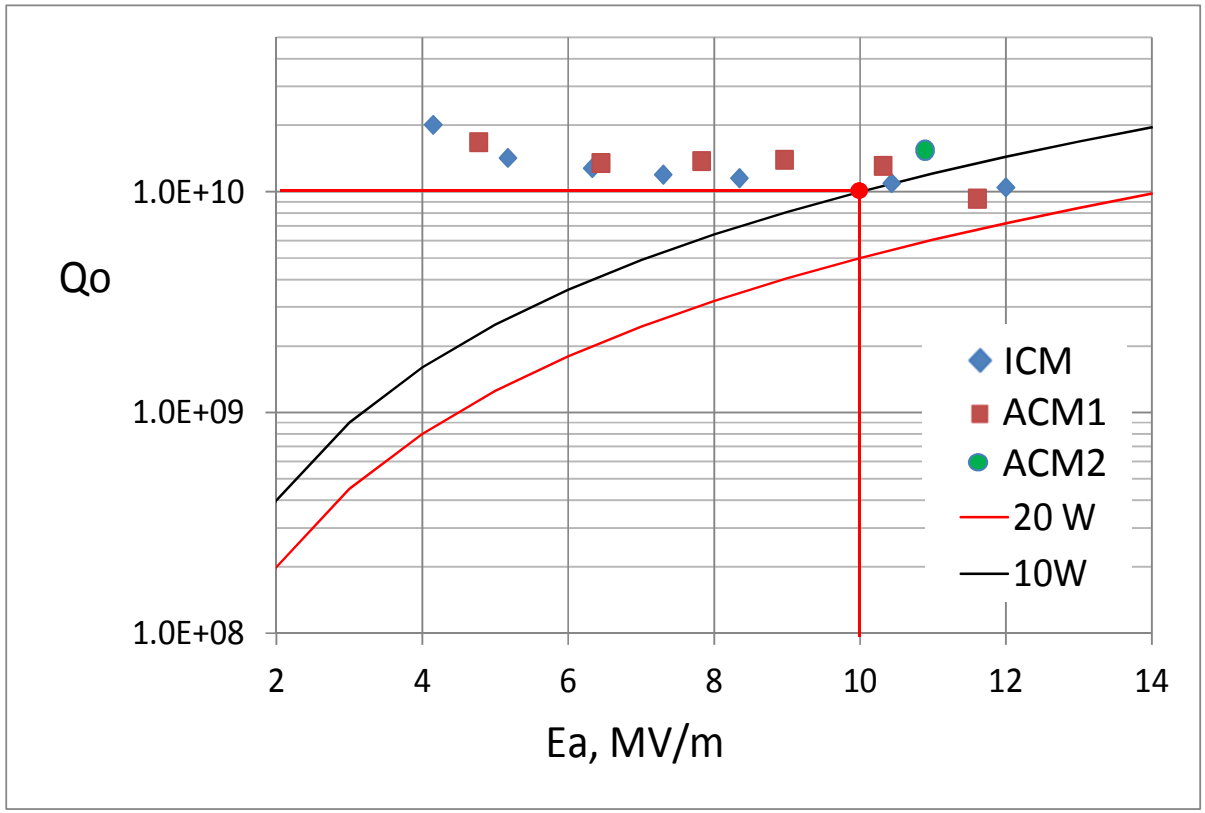

Accelerator Vault – existing configuration

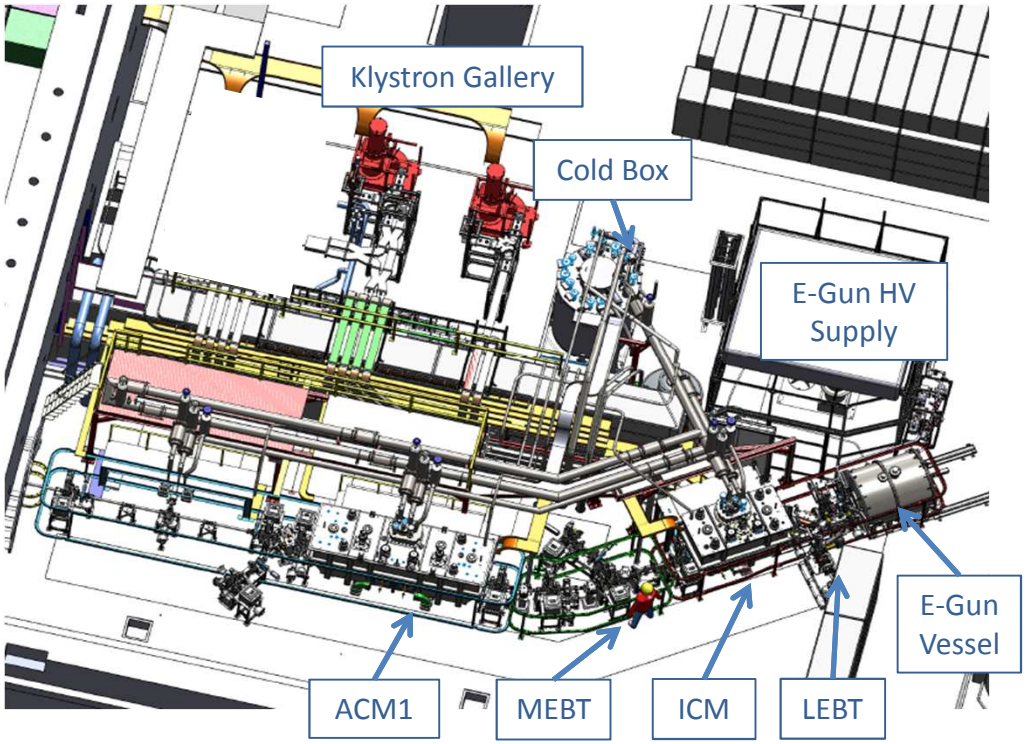

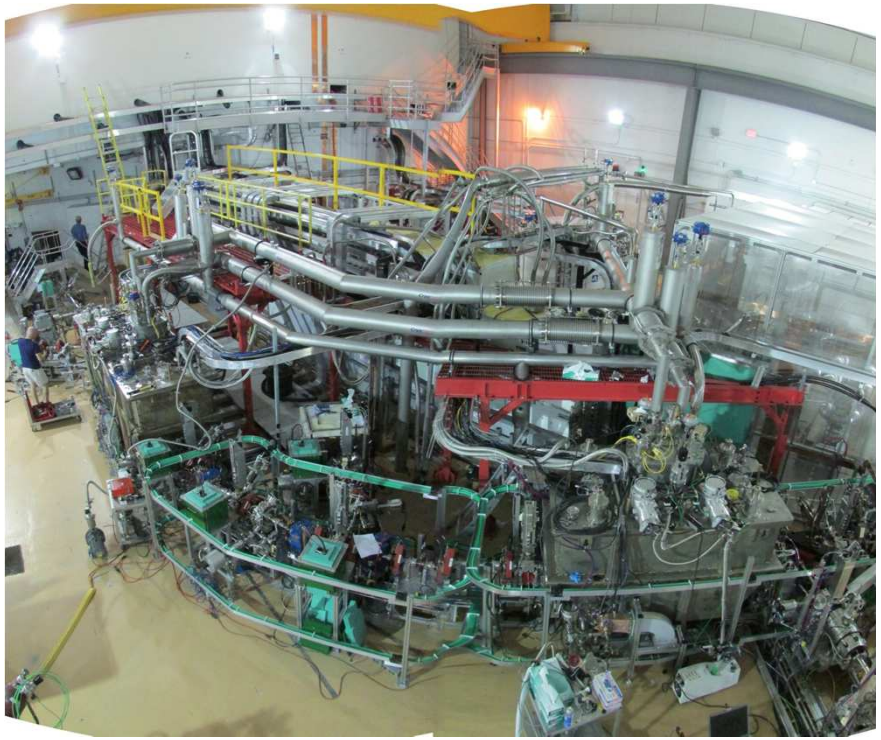

Milestones and next steps

- Sept. 2014 – successfully accelerated beam to 23MeV with two SRF cavities in two modules
- 2016-17
  - added a third cavity in the 2nd module for rf tests – successfully implemented vector sum control of two cavities from a single rf source
  - using e-linac injector for material testing for photo-fission converter – prepare MPS system
- 2018 – achieve 30-35 MeV and ramp up intensity in stages – complete electron beamline

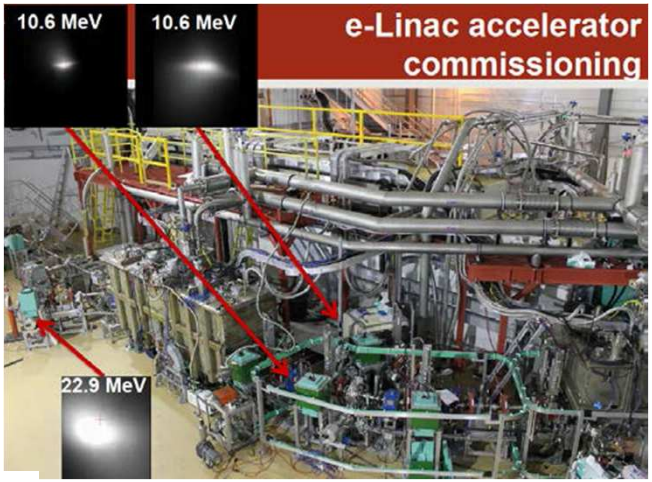

ARIEL-II – 2016-2022

- Target Hall and AETE
- RIB Transport
- Operation Model

Target Hall and ARIEL
Electron Target East (AETE)

ARIEL Target Hall

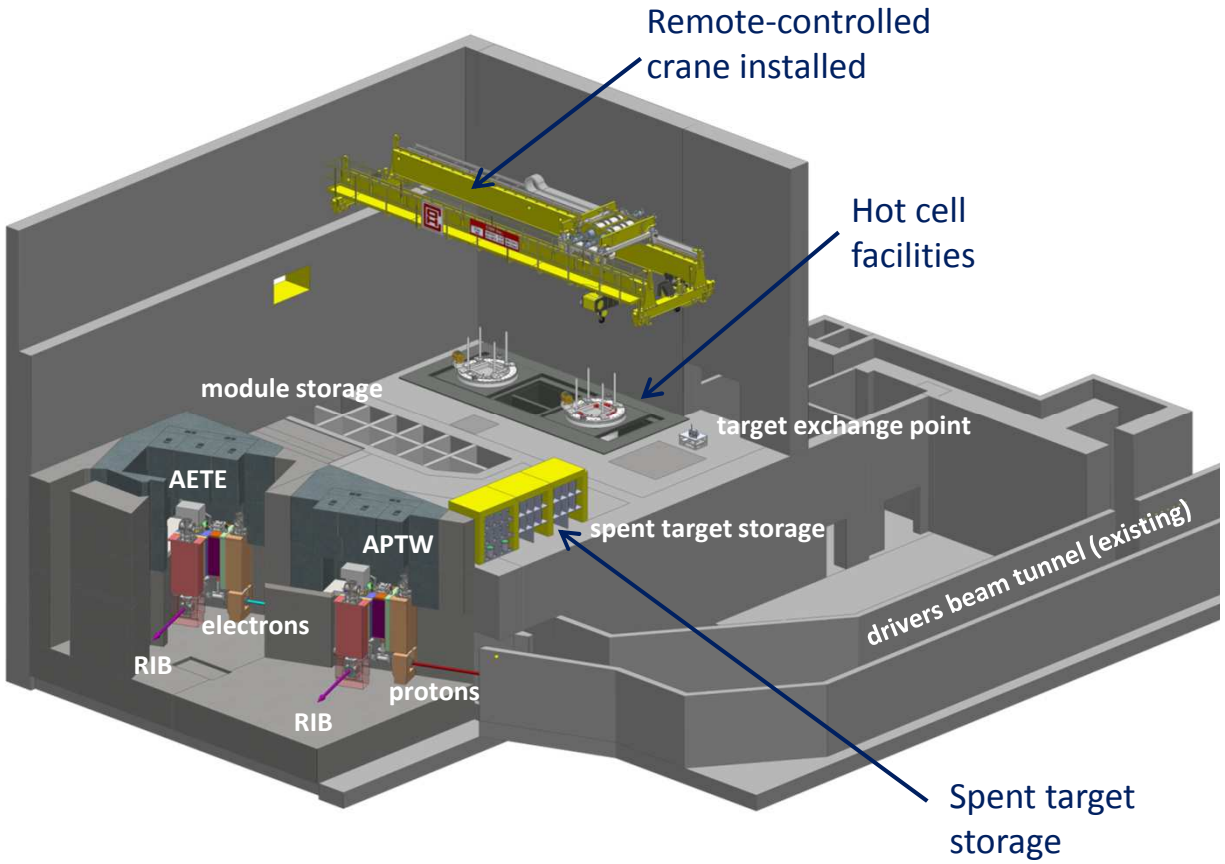

- Two independent target stations – APTW for protons and AETE for electrons
- Target exchanges are done by the overhead crane
- Irradiated targets are removed to the spent target storage where they remain for 2-3 years to reduce activity
- The cooled targets are then removed to the hot cell for waste sorting and disposal
- The hot cells are also used for target module servicing and failure modes

ARIEL Electron Target East – AETE – Design Features

- AETE concept is characterized by
  - Hermetic target canister
    - Supports full offline conditioning
    - Contains the activity during the target life cycle
    - Supports quick disconnect and target exchange without moving support module
  - External gamma converter
    - V-shaped, cooled
    - external to target canister
  - Direct target exchange
    - Target canister is remotely disengaged and moved to the storage decay vessel
    - Remote vacuum disconnect
  - Modular system of vertical shield plugs

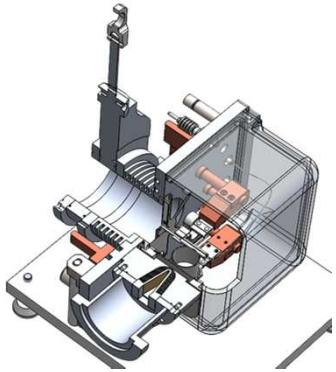

Target canister

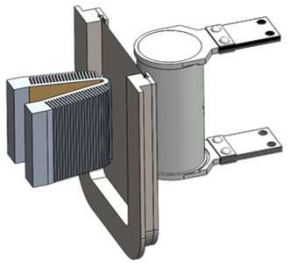

Converter & target

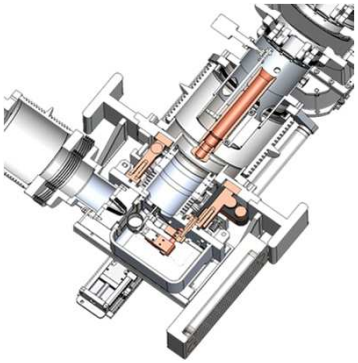

Canister & Beamline

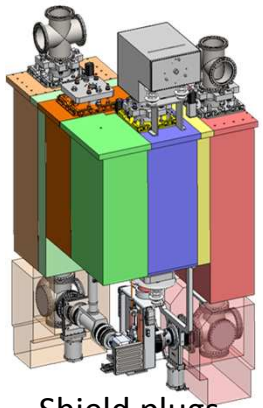

Shield plugs

Photo - converter

- At 100kW the power deposited in the target would be too high so a converter is used to attenuate electron flux and produce gammas
- A V-shaped cooled High-Z material is used for the converter
- Also the gamma attenuation with length through the target is significant so the target is placed vertically with respect to the electron direction
- The target operates at ~2000C with beam and Ohmic heating
- The 300kV 3mA beam from the e-Linac gun are being used to test materials for the converter

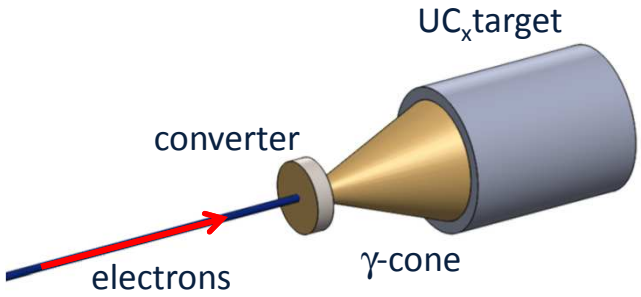

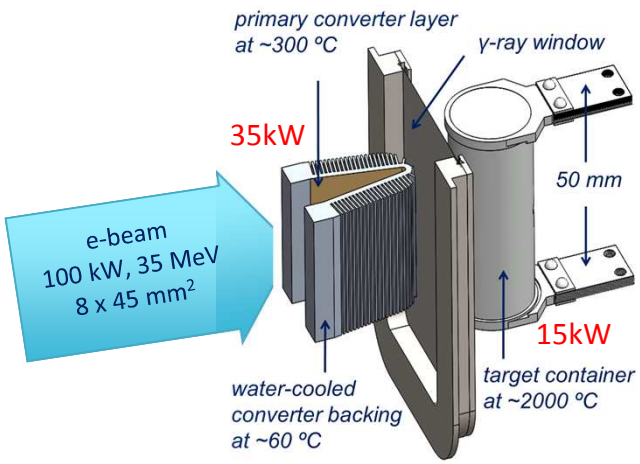

samples

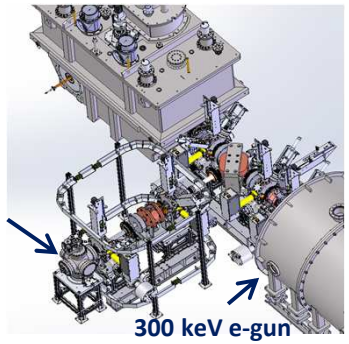

Electron target hermetic unit

- The Target canister is hermetic and connects remotely to the upstream and downstream beamline
- Hermetic vessel fitted with gas connections, vacuum isolation, cooling water, electric connections – diagnostics, heater current, DC and RF voltages

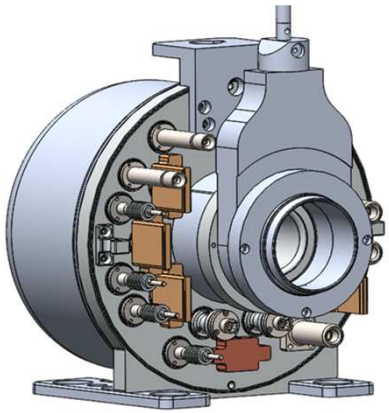

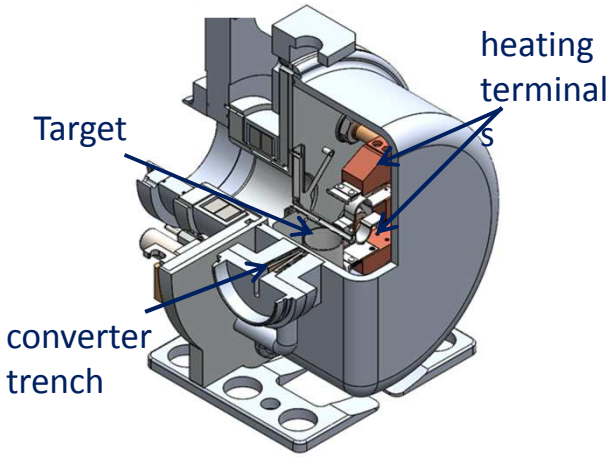

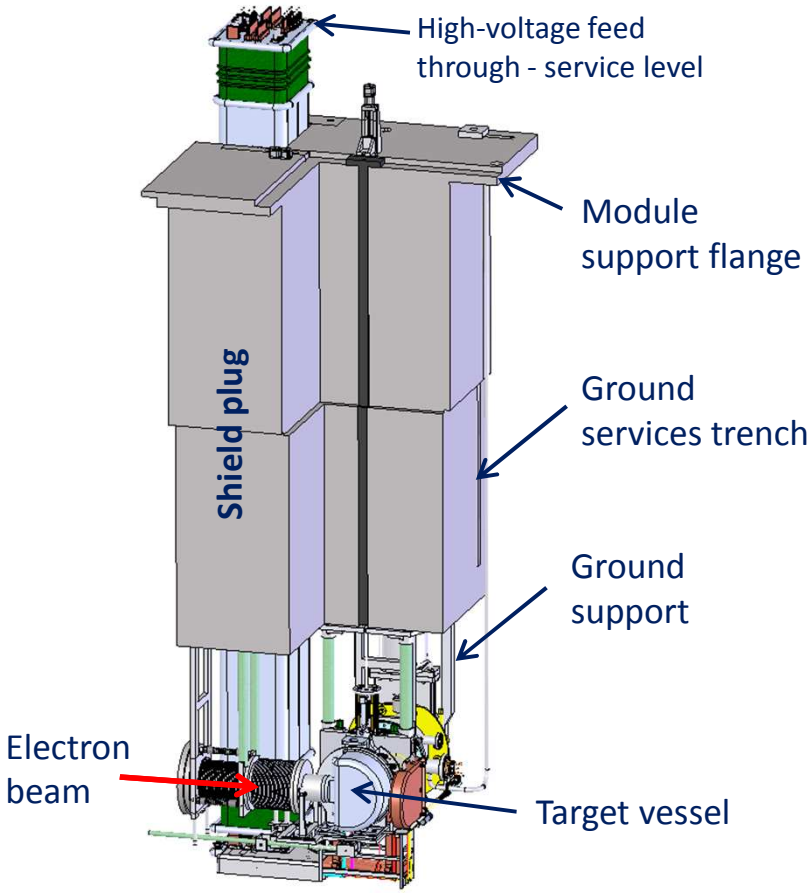

RIB Extraction and Separation

- Radioactive species created in the target are ionized in the biased source and accelerated
- Downstream optics are located in heavily shielded modules with services at the top
- A pre-separator and electrostatic bender are used to contain most of the activity delivering a narrow A/q band to the mass separator room for further selection
- RIB transport modules fit into a shielding canyon

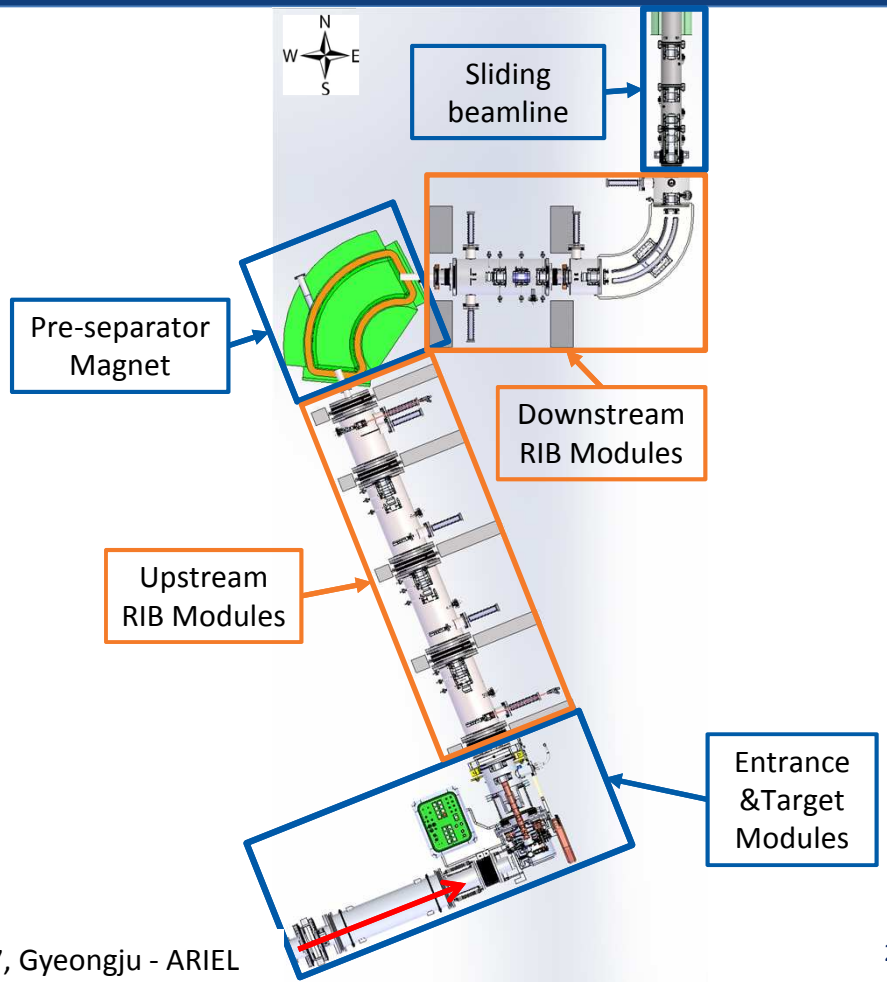

AETE Electron Target Station

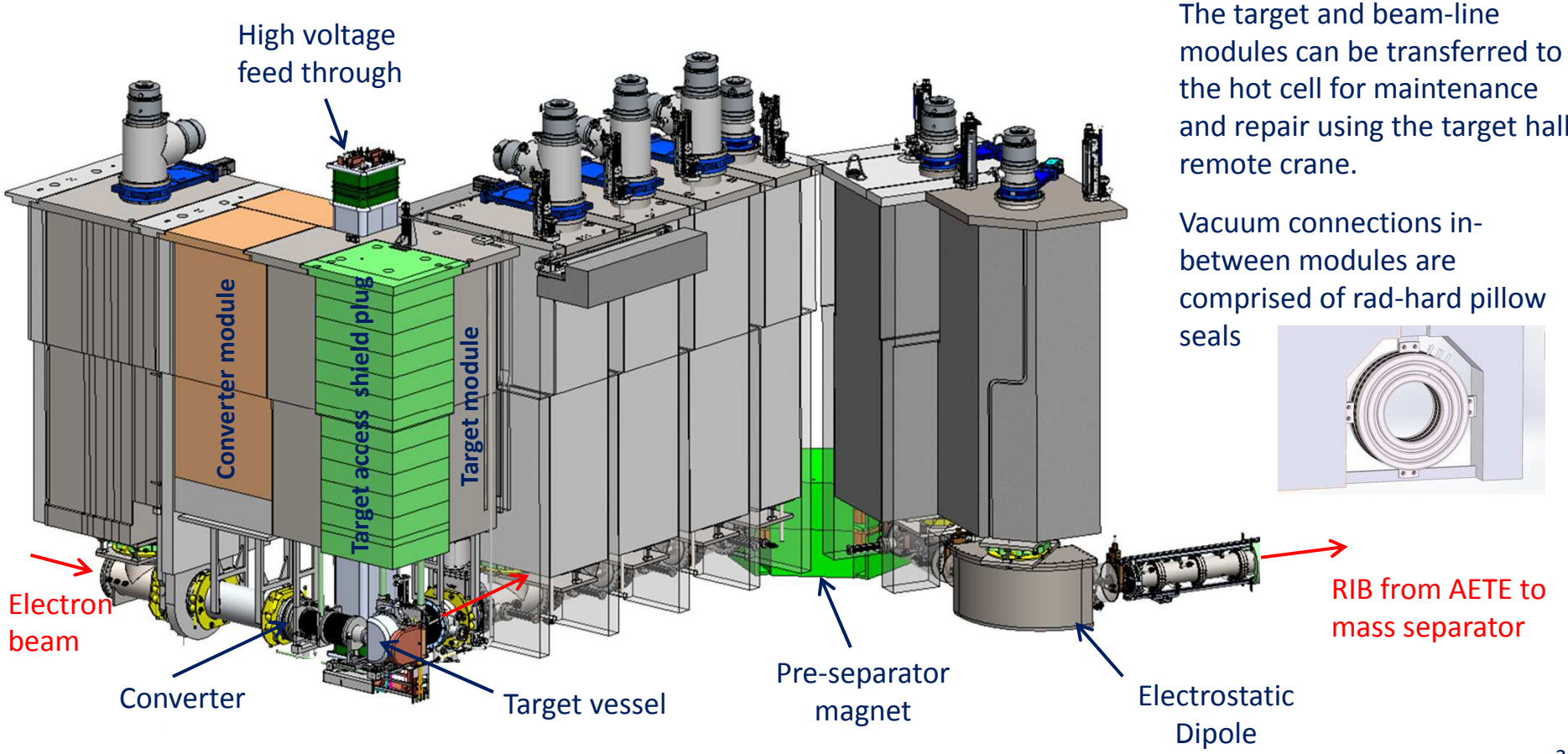

The target and beam-line modules can be transferred to the hot cell for maintenance and repair using the target hall remote crane.

Vacuum connections in-between modules are comprised of rad-hard pillow seals

Target Exchange

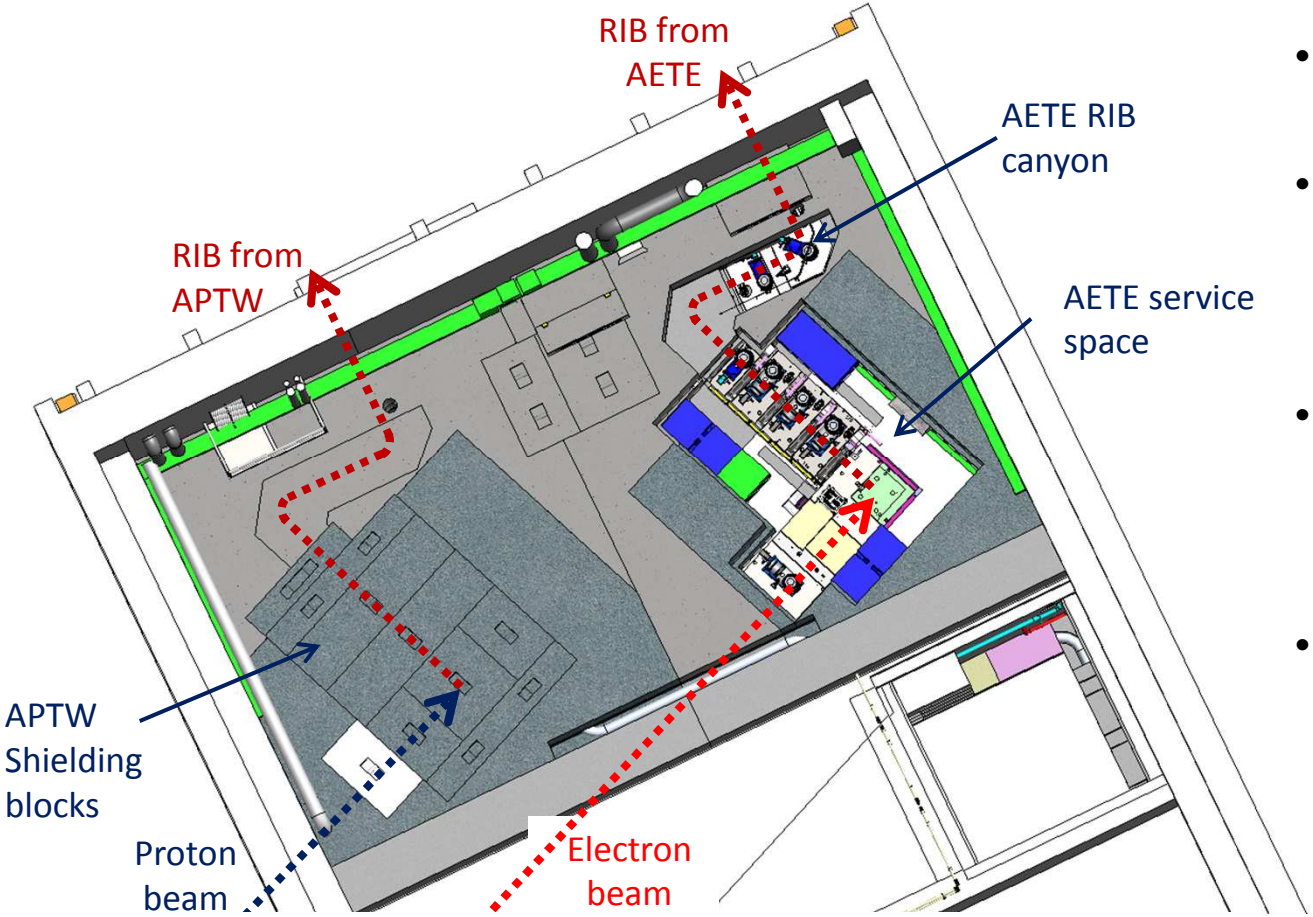

- The target area is covered by removable shielding
- To initiate a target exchange the shielding blocks are removed and the services are disconnected
- The shield plug on top of the target is removed and the crane removes the spent target
- Target removal and replacement is estimated to take ~8-12 hours

Target Exchange Strategy

1) Target vessel to storage vault

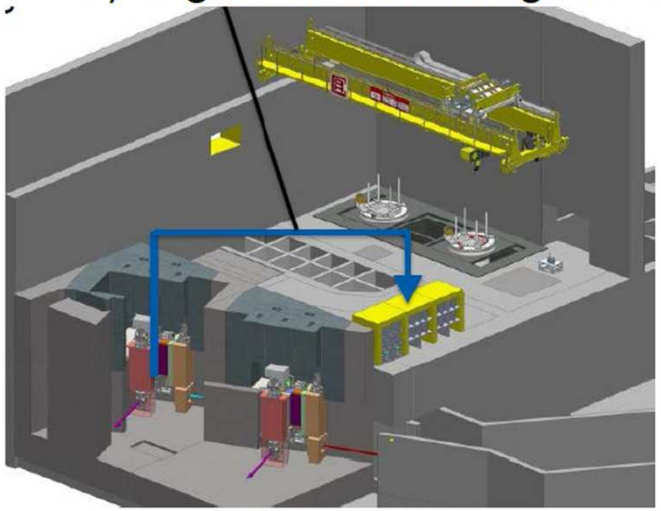

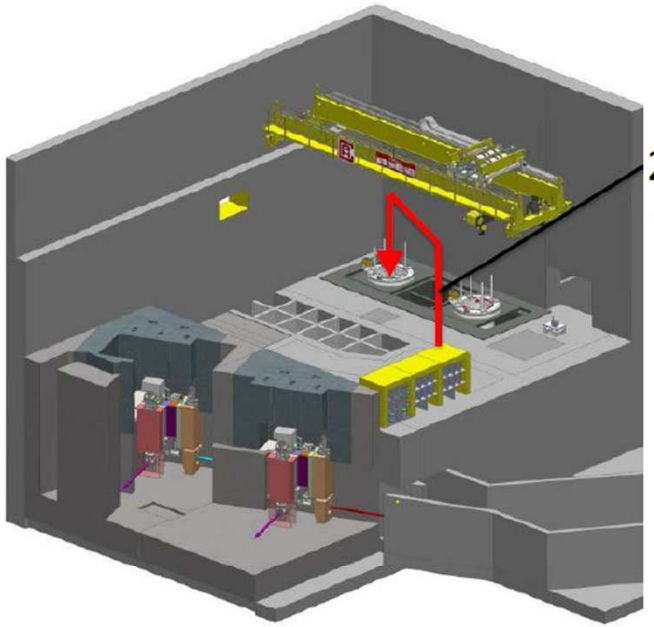

2) After ~2 yrs, target vessel to hot cell for separation & packaging

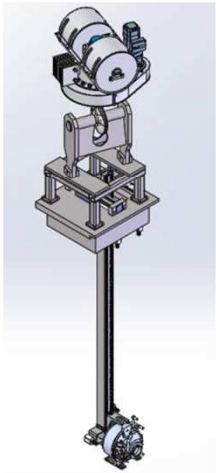

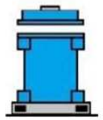

3) Packaged waste shipped to Chalk River

Target exchange tool

Target and Ion Source Acceptance stand (TISA)

An off-line test stand, TISA, is being designed to test validation/integration capabilities during the detailed design stage – will give hands-on feedback to the design – TISA will inform:

- e-beamline to converter coupling
- Target station/target & ion source operation (without driver beam)
- Validation of service delivery via the HV bridge/feedthrough
- RIB module alignment system and RIB transport
- Ion source investigations
- TISA can also serve as a future off-line conditioning and target pre-validation stand during operation

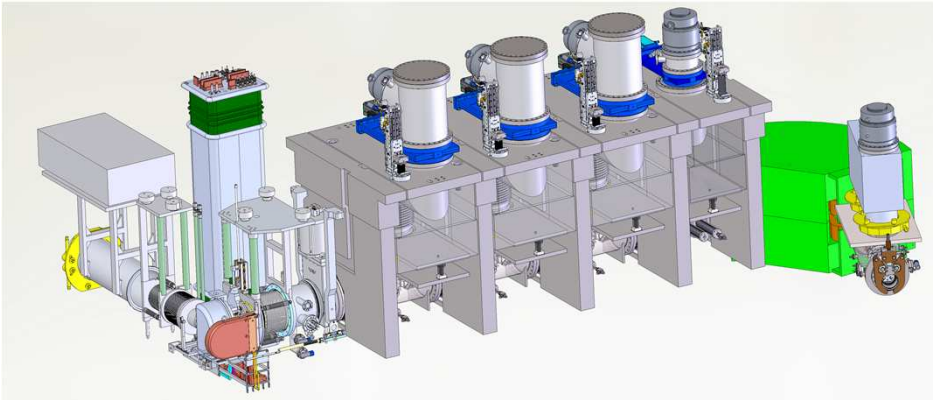

ARIEL-II – Low Energy RIB Transport

Beam delivery schematic

- There are three target areas – one in ISAC with ITW/ITE as a single source and two in ARIEL with APTW and AETE as independent sources
- A flexible low energy transport allows either ARIEL target to deliver to the ISAC linacs while the other delivers to one of the ISAC low energy areas
- The ISAC beam is sent to the second low energy area

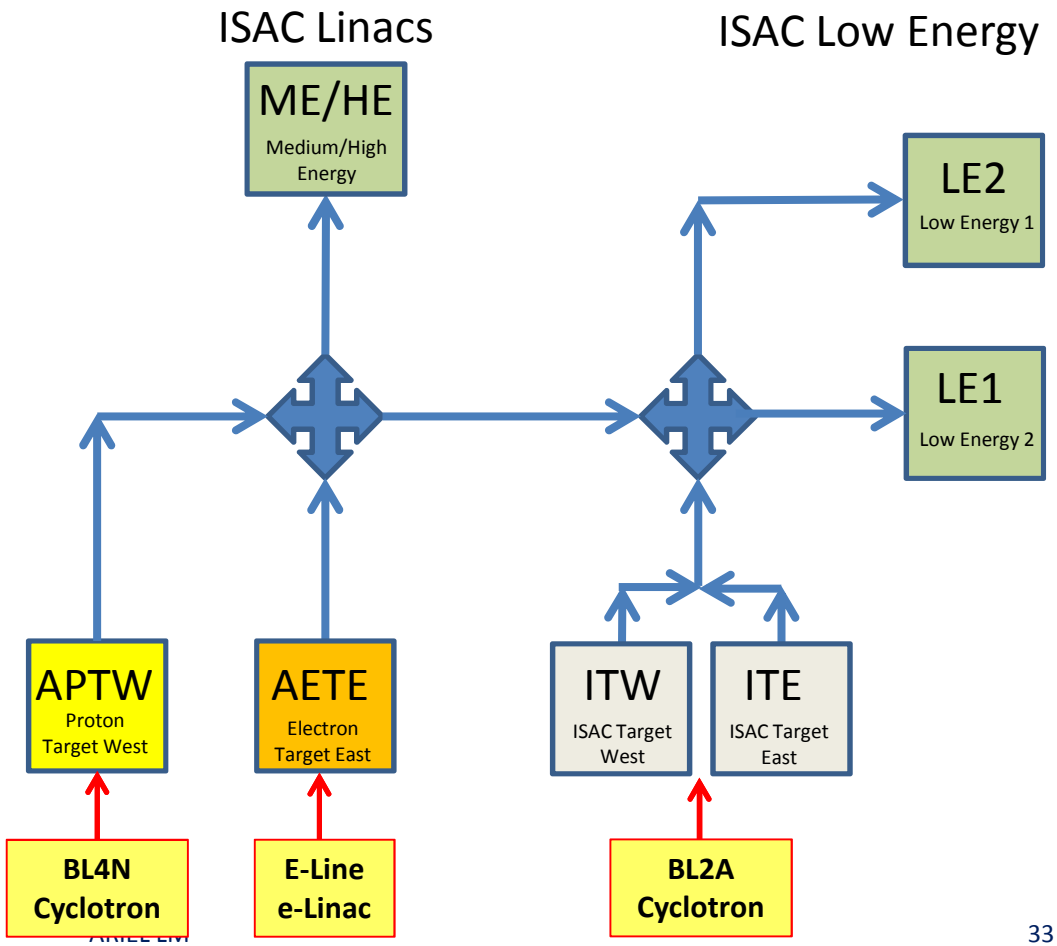

Beam delivery schematic

- ARIEL beams bound for post-acceleration have the option of charge breeding in an EBIS
- The EBIS will be installed in 2018
- Initially high mass beams from ISAC will be delivered to EBIS and back to ISAC for acceleration in 2019

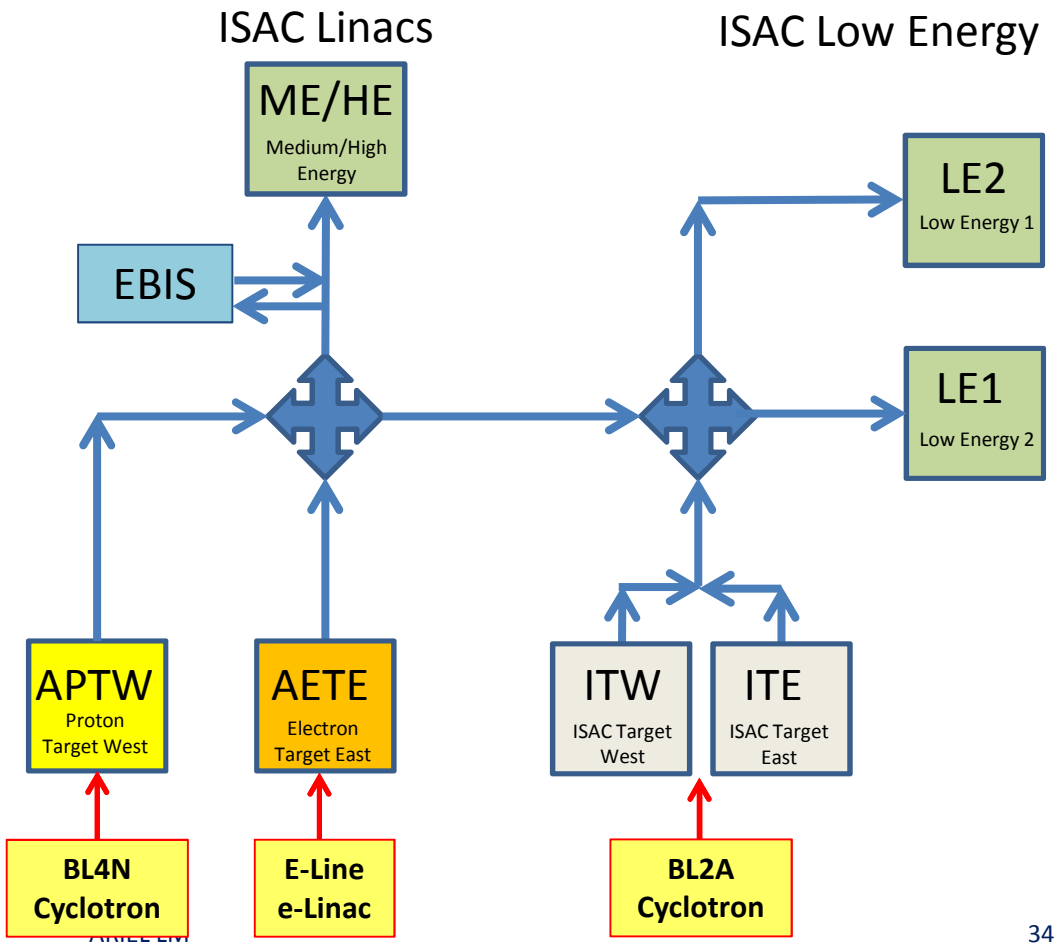

RIB Transport

- RIB transport is a complex of 200m of electrostatic beam lines connecting ARIEL target stations to ISAC experimental areas
- Based on ISAC modular optics
- Flexible layout enables 3 simultaneous RIB's delivery: 2 simultaneous ARIEL beams + ISAC beam – 1 accelerated and 2 for low energy

- Includes:
  - Pre-separation within the target hall
  - High resolution and medium resolution spectrometers
  - By-pass mode
  - Charge breeding: EBIS
  - Yield station

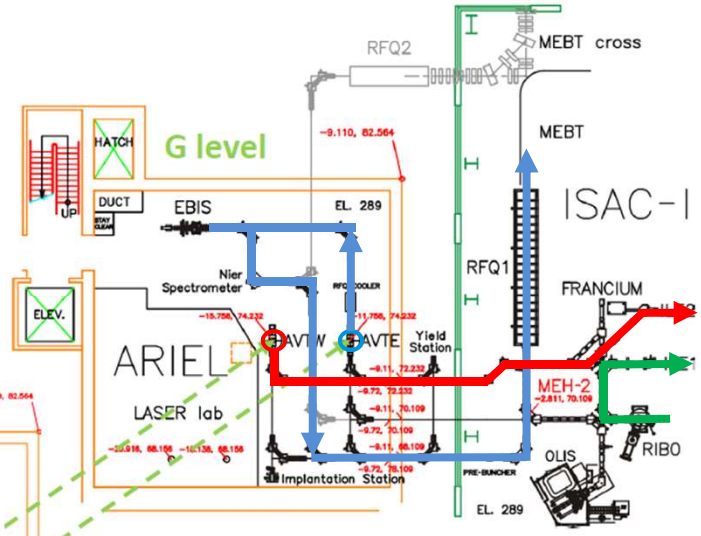

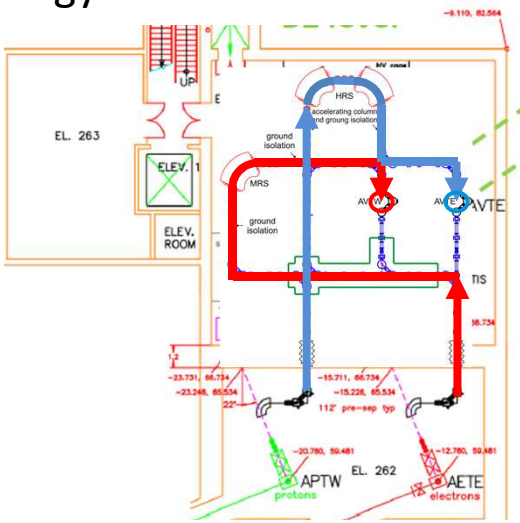

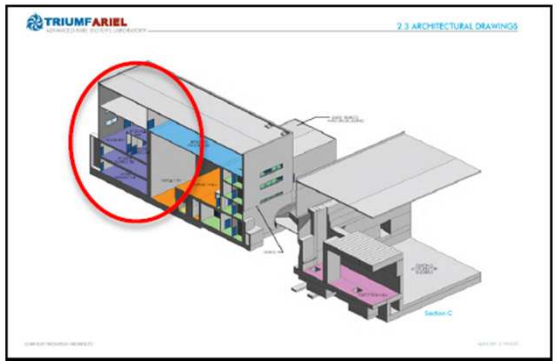

ARIEL Low Energy Beamlines status

- Detailed design and procurements complete
- Installation and test of a prototype section completed - Vacuum level 1e-8 Torr
- Beginning installation

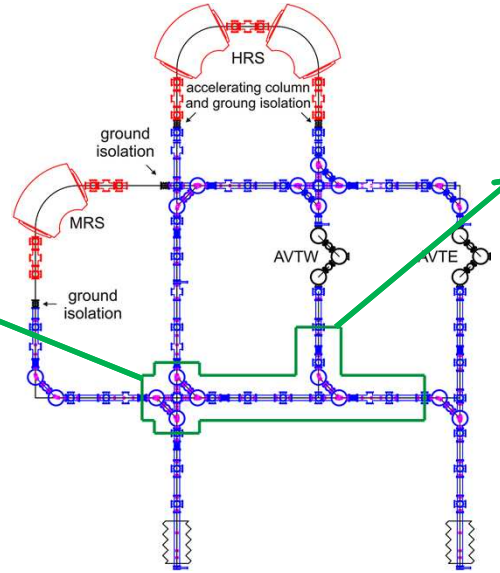

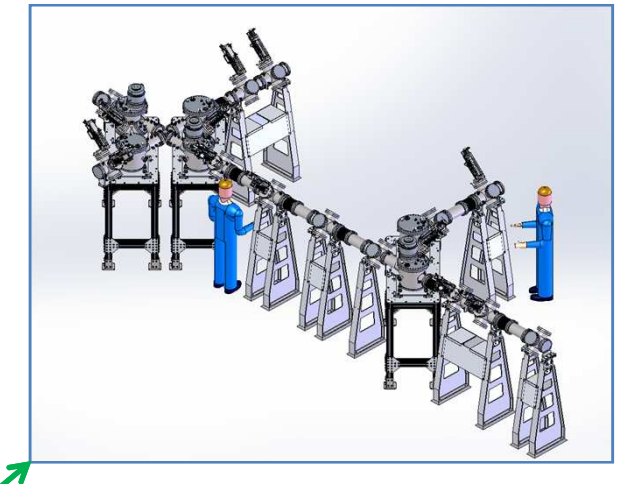

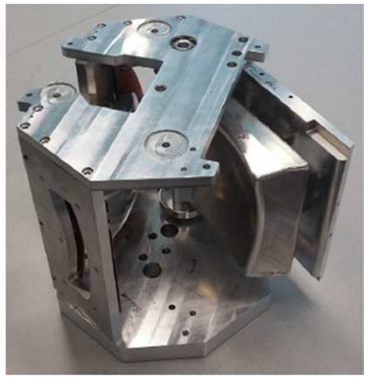

EBIS Charge breeder

- EBIS (MPIK Heidelberg) operates at a rep rate of 100Hz providing beams with 4 < A/q <7
- 6T superconducting magnet
- Scheduled for delivery in Jan. 2018

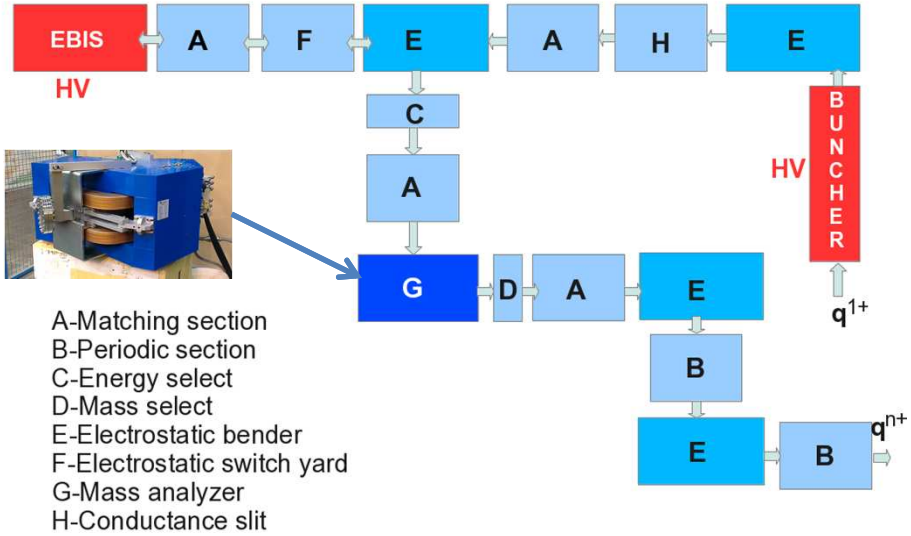

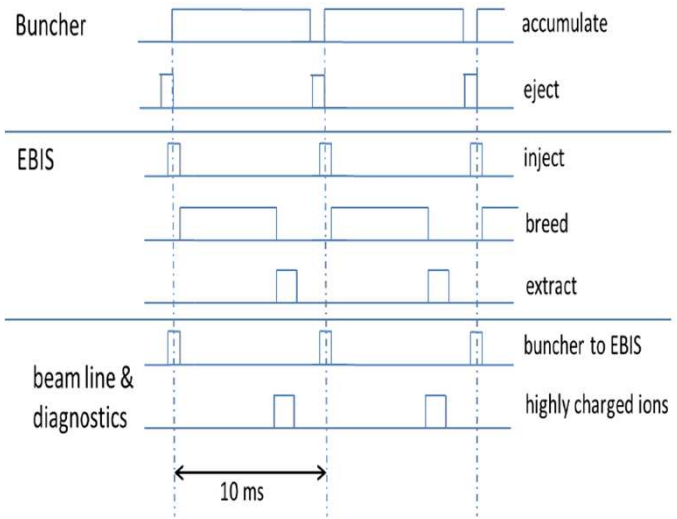

High Resolution Spectrometer

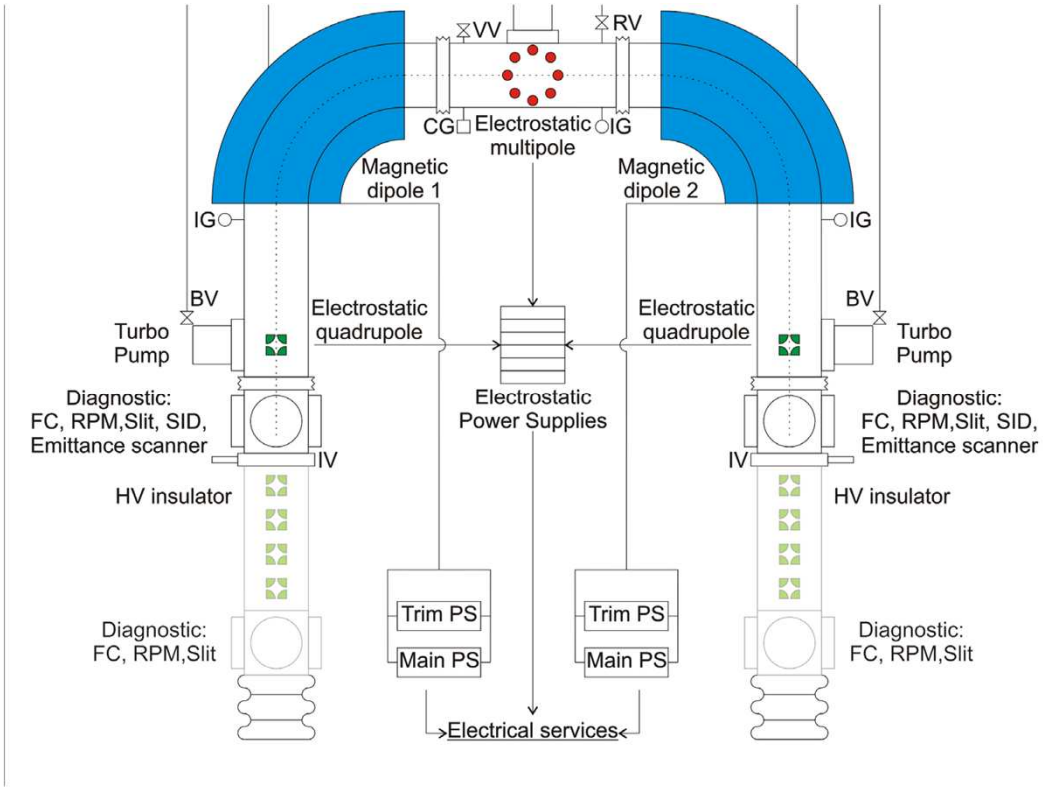

- Design resolution of 20000
- Utilizes an electrostatic multipole with 44 poles
- Dipoles received

ARIEL-II – Operational Model

Operational Model

- An accelerator operations scheme accounting for typical logistical constraints to provide insight into the future facility
- A major goal of ARIEL/ISAC is to allow the delivery of three simultaneous RI beams to ISAC at >9000 hours of RIBs per year.
- An operation model helps inform the requirements of the infrastructure, the resources required to operate the facility and the experimental output that can be expected.

Building blocks - Drivers

Two drivers

- 500MeV Cyclotron
  - drives ARIEL proton station (APTW) and ISAC stations (ITE/ITW)
  - Assume 35 weeks a year operation
- 30MeV e-Linac
  - drives ARIEL electron station (AETE)
  - Assume 43 weeks a year operation

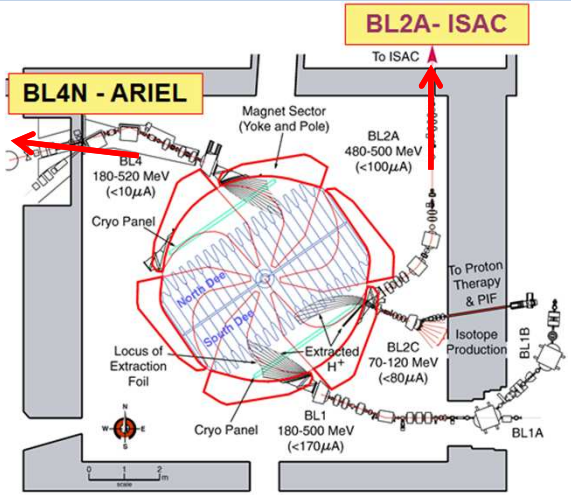

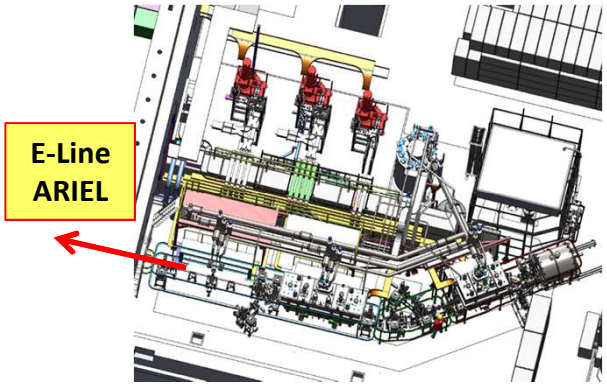

Building blocks - Target stations

- There are three target areas that can operate at one time with three paths to allow simultaneous delivery
- Beam scheduling and operation will be much more complex in the ARIEL era and constrained by available manpower and infrastructure
- Solution: An assembly-line approach with standardized target and maintenance cycles

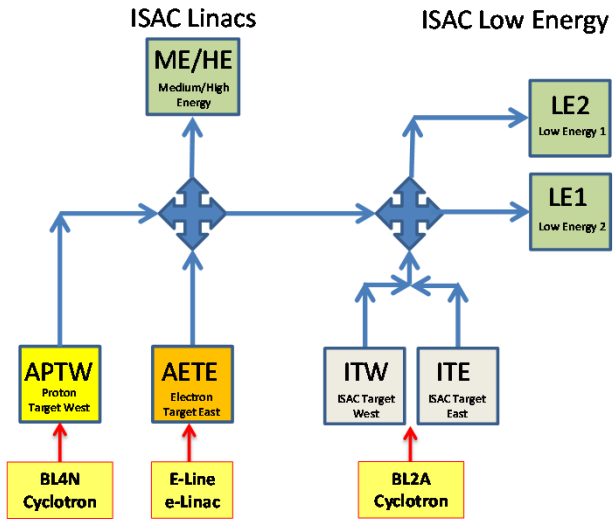

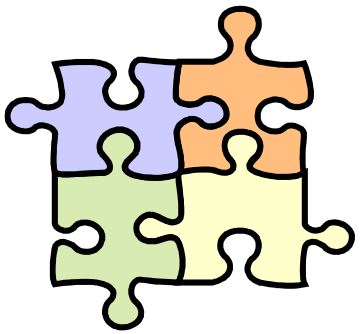

ARIEL/ISAC RIB Factory Model

- An underlying principle is that to be able to operate ARIEL/ISAC we have to get more efficient
  - Designing for maximum flexibility is operationally inefficient and resource hungry
- We define a `RIB Factory' with a standard weekly rhythm – three working target areas in a three week staggered schedule
- The model aims to define a standardized operation with a weekly `heartbeat'

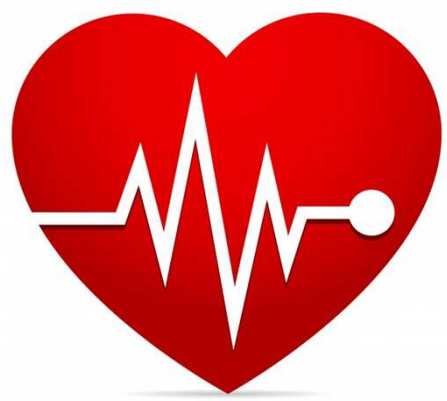

Factory Target cycle

- Propose a 3 week interleaved target cycle for each of ITE/ITW, APTW and AETE – one new target per week
- While one target is being exchanged the other two areas are in operation
- Each week is standardized in terms of target exchange, maintenance, start-up but moving from station to station

Week	Exchange
1	ITE
2	APTW
3	AETE
4	ITW
5	APTW
6	AETE
7	ITE
8	APTW
9	AETE
10	ITW
11	APTW

ARIEL/ISAC Operational Model

- Strawman schedules have been put together based on the known boundary conditions yielding >9000 hours per year of delivered RIBs
- Number of RIB shifts per shift as a function of time during the week is plotted below

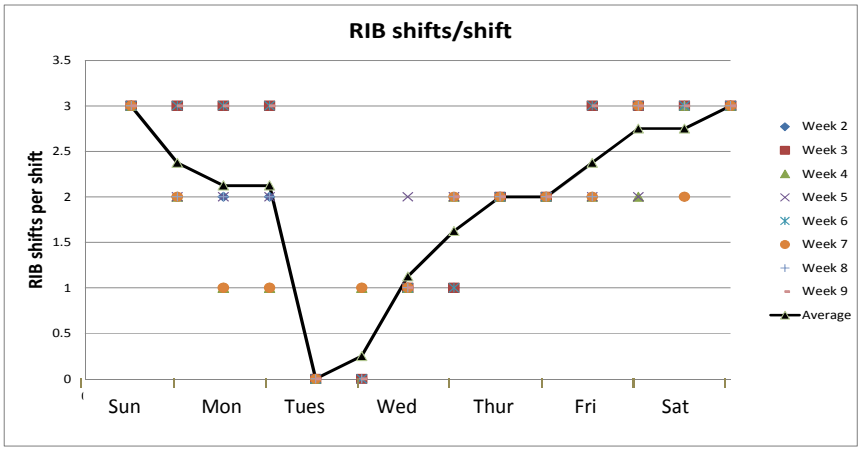

ISAC

ITE	Su		Mo		Tu		We		Th		Fr		Sa	
Week	AM	PM	AM	PM	AM	PM	AM	PM	AM	PM	AM	PM	AM	PM
1	Condition on-line without beam				Maint.	Condition-beam		Start	Yield	Production				
2	Production		Beam dev/Maint		Maint.	TDS	Production							
3	Production				Maint.	Production								
4	Production				Shields	Cooldown								
5	Cooldown				Tar-> HC		Tar. X		Conditioning station					
6	Conditioning station				Cond->Tar	Condition on-line without beam								
7	Condition without beam				Maint.	Condition-beam		Start	Yield	Production				

ITW	Su		Mo		Tu		We		Th		Fr		Sa	
Week	AM	PM	AM	PM	AM	PM	AM	PM	AM	PM	AM	PM	AM	PM
1	Production				Shields	Cooldown								
2	Cooldown				T> HC>X		Tar. X		Conditioning station					
3	Conditioning station				Cond->Tar	Condition on-line without beam								
4	Condition on-line without beam				Maint.	Condition-beam		Start	Yield	Production				
5	Production		Beam dev/Maint		Maint.	TDS	Production							
6	Production				Maint.	Production								
7	Production				Shields	Cooldown								

ARIEL

APTW	Su		Mo		Tu		We		Th		Fr		Sa	
Week	AM	PM	AM	PM	AM	PM	AM	PM	AM	PM	AM	PM	AM	PM
1	Production				Maint.	Production								
2	Productio	Cooldown	Tar. X		Tar. X		Cond-beam		Start	Yield	Production			
3	Production				Maint.	TDS	Production							
4	Production				Maint.	Production								
5	Productio	Cooldown	Tar. X		Tar. X		Cond-beam		Start	Yield	Production			
6	Production				Maint.	TDS	Production							
7	Production				Maint.	Production								

AETE	Su		Mo		Tu		We		Th		Fr		Sa	
Week	AM	PM	AM	PM	AM	PM	AM	PM	AM	PM	AM	PM	AM	PM
1	Production				Maint.	TDS								
2	Production				Maint.	Production								
3	Productio	Cooldown	Tar. X		Tar. X		Cond-beam		Start	Yield	Production			
4	Production				Maint.	TDS								
5	Production				Maint.	Production								
6	Productio	Cooldown	Tar. X		Tar. X		Cond-beam		Start	Yield	Production			
7	Production				Maint.	TDS								

Summary

- ARIEL will triple the RIBs available for users at TRIUMF over the next ten years
- The project is based on simultaneous operation of two targets driven by 500MeV protons and one target driven by a 30-50MeV electron linac
- An operation model is used to simulate an end state beam schedule that shows that >9000 RIB hours per year is possible
  - The model is consistent with a `RIB Factory' - a standard weekly rhythm maximizes efficiency while minimizing resources

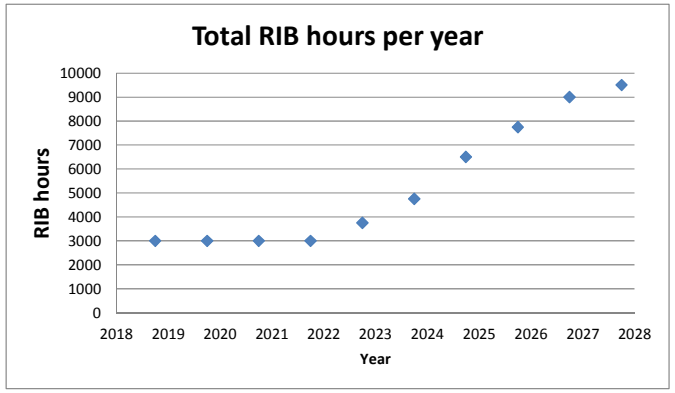

TRIUMF

Canada's national laboratory
for particle and nuclear physics
and accelerator-based science

Thank you!
Merci!

Follow us at TRIUMFLab

TRIUMF: Alberta | British Columbia | Calgary | Carleton | Guelph | Manitoba | McGill | McMaster | Montréal | Northern British Columbia | Queen's | Regina | Saint Mary's | Simon Fraser | Toronto | Victoria | Western | Winnipeg | York

Back-up Slides

Electron Target Heating

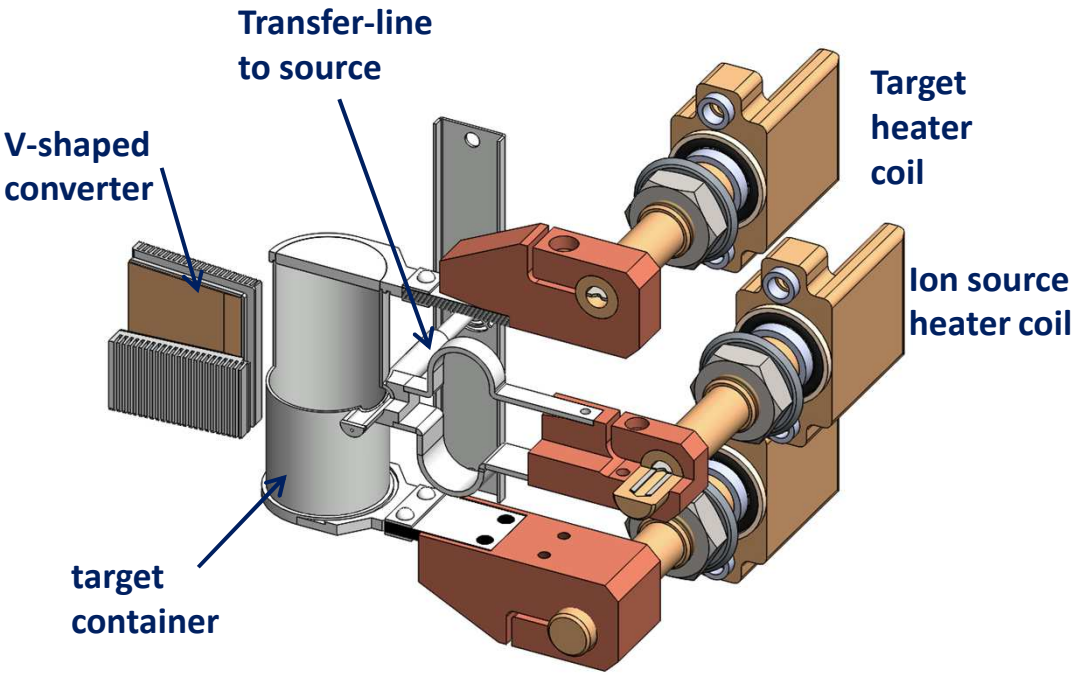

Assuming 100 kW electron beam:

- Converter absorbs ≈35 kW
- UC_x target absorbs ≈15 kW

Consequences for 2000 C Optimum Operation

- We will vary the Ohmic heating depending on the actual beam power

ARIEL-III second accelerator path

- new RFQ tailored for A/Q from 4 to 7 (charge bred beams) with output energy compatible with ISAC-I DTL
- new DTL injector with fix energy
- possible “SCA” section
- 2 independent post-accelerated RIB beams

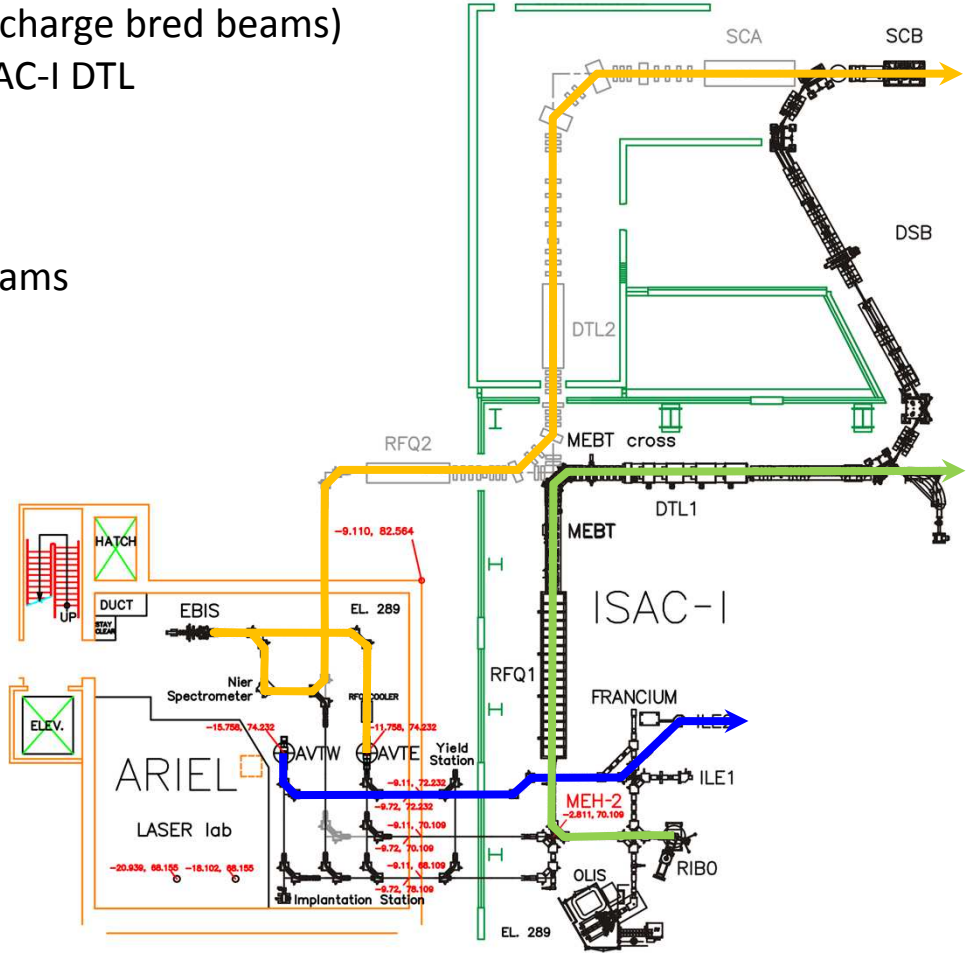

Phases of Low Energy Beam Delivery in ARIEL

- A first phase (2019) will see high mass beams from ISAC sent to ARIEL EBIS for charge breeding
- Charge bred beam sent back to ISAC for acceleration to ISAC medium and high energy areas
- Next phase (2021) will see low energy beam from ARIEL AETE to ISAC or Yield station

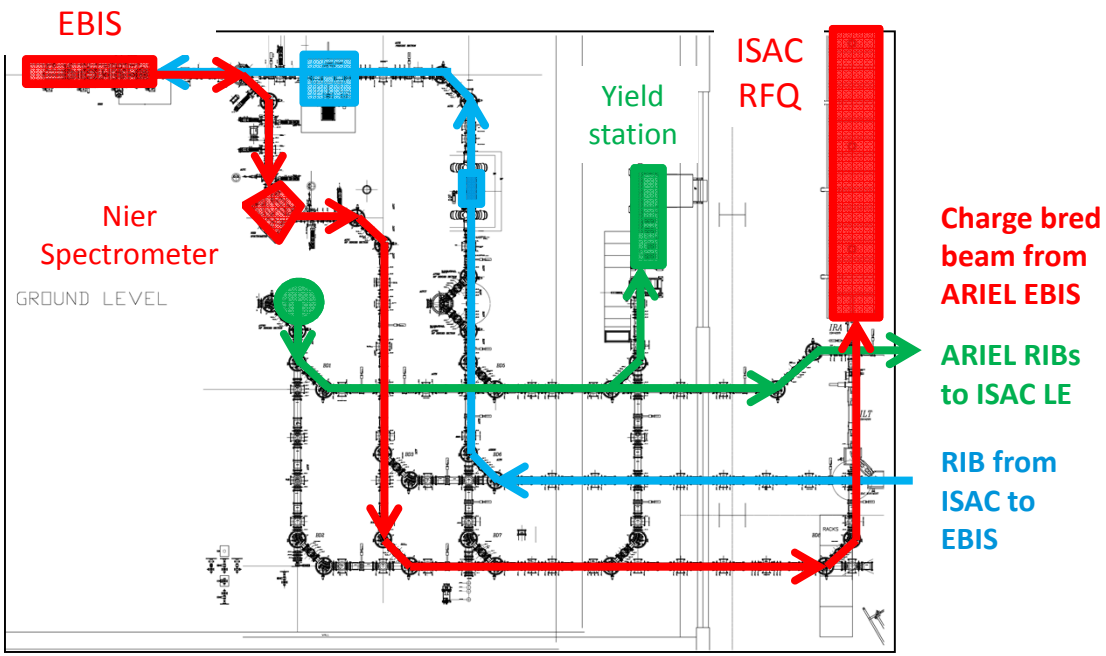

Phases of Low Energy Beam Delivery in ARIEL

- A first phase (2019) will see high mass beams from ISAC sent to ARIEL EBIS for charge breeding
- Charge bred beam sent back to ISAC for acceleration to ISAC medium and high energy areas
- Next phase (2021) will see low energy beam from ARIEL AETE to ISAC or Yield station
- Proton station will be added by 2023 for ISAC HE or LE

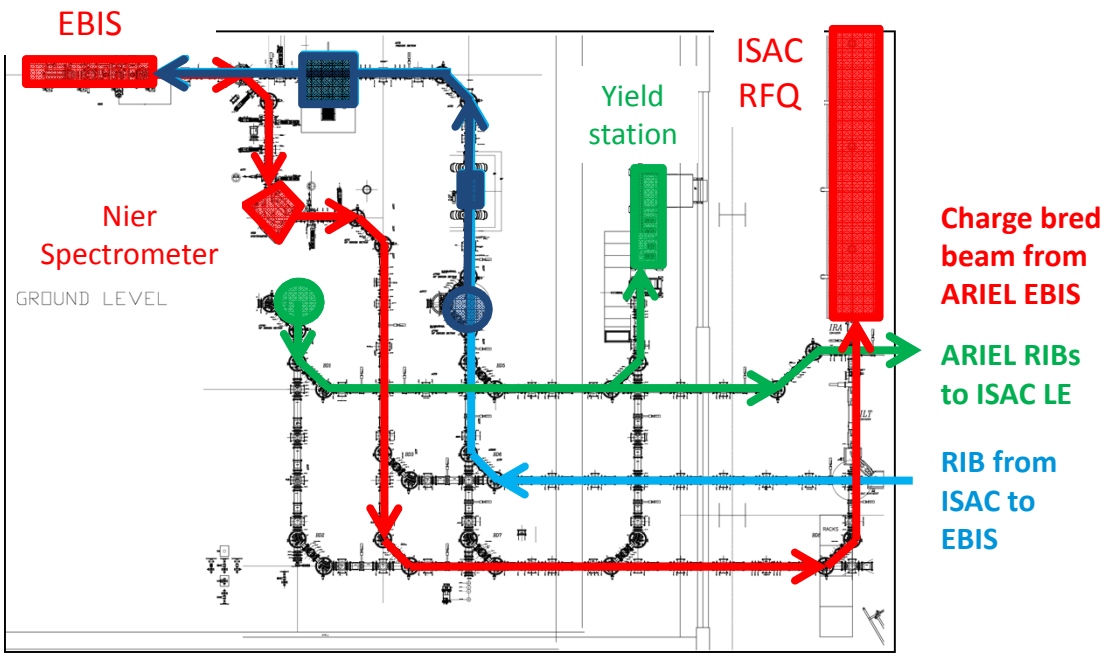

Building blocks – ISAC Target Exchanges

- Operation alternates between target stations
- Target changes are carried out on one station while the other station is used for RIB production
- ISAC target stations weekly schedule repeats every six weeks with three weeks each for ITW and ITE RIB production

ITE	Su		Mo		Tu		We		Th		Fr		Sa	
Week	AM	PM	AM	PM	AM	PM	AM	PM	AM	PM	AM	PM	AM	PM
1	Condition on-line without beam				Maint.	Condition-beam		Start	Yield	Production				
2	Production		Beam dev/Maint		Maint.	TDS	Production							
3	Production				Maint.	Production								
4	Production				Shields	Cooldown								
5	Cooldown				Tar-> HC	Tar. X			Conditioning station					
6	Conditioning station				Cond->Tar	Condition on-line without beam								
7	Condition without beam				Maint.	Condition-beam		Start	Yield	Production				

ITW	Su		Mo		Tu		We		Th		Fr		Sa	
Week	AM	PM	AM	PM	AM	PM	AM	PM	AM	PM	AM	PM	AM	PM
1	Production				Shields	Cooldown								
2	Cooldown				T> HC>X	Tar. X			Conditioning station					
3	Conditioning station				Cond->Tar	Condition on-line without beam								
4	Condition on-line without beam				Maint.	Condition-beam		Start	Yield	Production				
5	Production		Beam dev/Maint		Maint.	TDS	Production							
6	Production				Maint.	Production								
7	Production				Shields	Cooldown								

Standard activities are

- Swap shields (<1 shift) [remote handling]
- cooldown (7 days) [passive]
- target exchange (48 hours) [remote handling]
- Conditioning station (5 days) [target group]
- Condition on-line (6 days) + beam (1 day) [OPS]
- Start (tuning), Yield (24 hours) [OPS, beam development]
- Technical development shift (TDS) (12 hours) [physicist]

Building blocks – ARIEL Target Exchanges

- Both ARIEL stations operate in parallel
- ARIEL target stations weekly schedule repeats every three weeks
- APTW and AETE target exchange staggered by one week
- Goal is to replace the target and prepare for beam delivery during Mon-Thur so that production resumes before the weekend

APTW	Su		Mo		Tu		We		Th		Fr		Sa	
Week	AM	PM	AM	PM	AM	PM	AM	PM	AM	PM	AM	PM	AM	PM
1	Production				Maint.	Production								
2	Productio	Cooldown	Tar. X		Tar. X		Cond-beam		Start	Yield	Production			
3	Production				Maint.	TDS	Production							
4	Production				Maint.	Production								
5	Productio	Cooldown	Tar. X		Tar. X		Cond-beam		Start	Yield	Production			
6	Production				Maint.	TDS	Production							
7	Production				Maint.	Production								

AETE	Su		Mo		Tu		We		Th		Fr		Sa	
Week	AM	PM	AM	PM	AM	PM	AM	PM	AM	PM	AM	PM	AM	PM
1	Production				Maint.	TDS								
2	Production				Maint.	Production								
3	Productio	Cooldown	Tar. X		Tar. X		Cond-beam		Start	Yield	Production			
4	Production				Maint.	TDS								
5	Production				Maint.	Production								
6	Productio	Cooldown	Tar. X		Tar. X		Cond-beam		Start	Yield	Production			
7	Production				Maint.	TDS								

Standard activities are

- cooldown (12 hrs) [passive]
- target exchange (48 hours) [remote handling, OPS]
- beam conditioning (24 hours) [OPS]
- Start (tuning) (12 hours) [OPS]
- yield (12 hours) [OPS, beam delivery]
- Technical development shift (TDS) (12 hours) [physicist]

Estimating RIB hours

- The weekly schedules can be used to estimate the total RIB hours possible per year
- The scheduled RIB hours sums the `Production' time from the previous slides for a 3 week period
- The RIB delivered takes into account our downtime metrics (80% for ISAC and 77% for ARIEL)
- Scaling to a full year the analysis shows that 9270 total annual RIB hours is achievable

	ITE/ITW	AETE	APTW
Total shifts	**42**	**42**	**42**
Cooldown	0	-1	-1
Target exchange	0	-4	-4
On-line conditioning	-2	-2	-2
Maintenance/driver dev.	-5	-2	-2
Startup	-1	-1	-1
Yield	-1	-1	-1
Target development	-1	-1	-1
Shifts available	**32**	**30**	**30**
LE exp'ts (number)	4.6	2	2
HE exp'ts (number)	--	1.8	1.8
Procedures	-5	-4	-4
RIB shifts/3 weeks	**27**	**26**	**26**
RIB hours/3 weeks	324	312	312
RIB hours/35 weeks	3780		3640
RIB hours/43 weeks		4472	
RIB hrs. w. reliability	**3024**	**3443**	**2803**

Electron Gun

- Thermionic 300kV DC gun – cathode has a grid with DC supressing voltage and rf modulation that produces electron bunches at 650MHz
- Gun installed inside an SF6 vessel
- Rf delivered to the grid via a ceramic waveguide

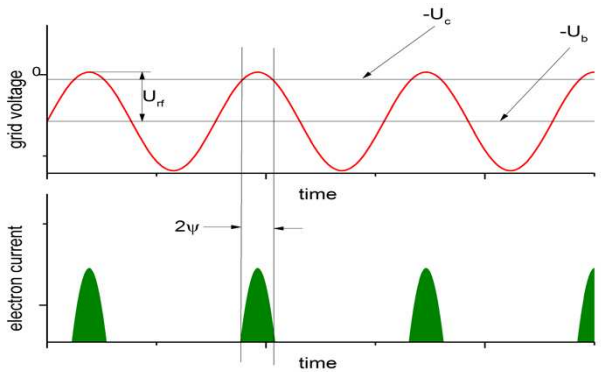

Parameter	Value
RF frequency	650MHz
Pulse length	$\pm 16^0$ (137ps)
Average current	10mA
Charge/bunch	15.4pC
Kinetic energy	300keV
Normalized emittance	5μm
Duty factor	0.01 to 100%