Cryostats for FCC/HE-LHC

Z. Townsend[1], V. Venturi[2], V. Parma
CERN, TE-MSC/CMI

Beurs van Berlage, Amsterdam, 13th April 2018

1. *Fellow supported by FCC*
2. *DOC student, KE3043 under FCC-GOV-CC-0043*

Content

- Introduction
- LHC dipole cryostat (as reference)
- Design approach for FCC HE-LHC
- Preliminary design solutions
- Summary and Outlook

FCC-hh 2016 integration studies

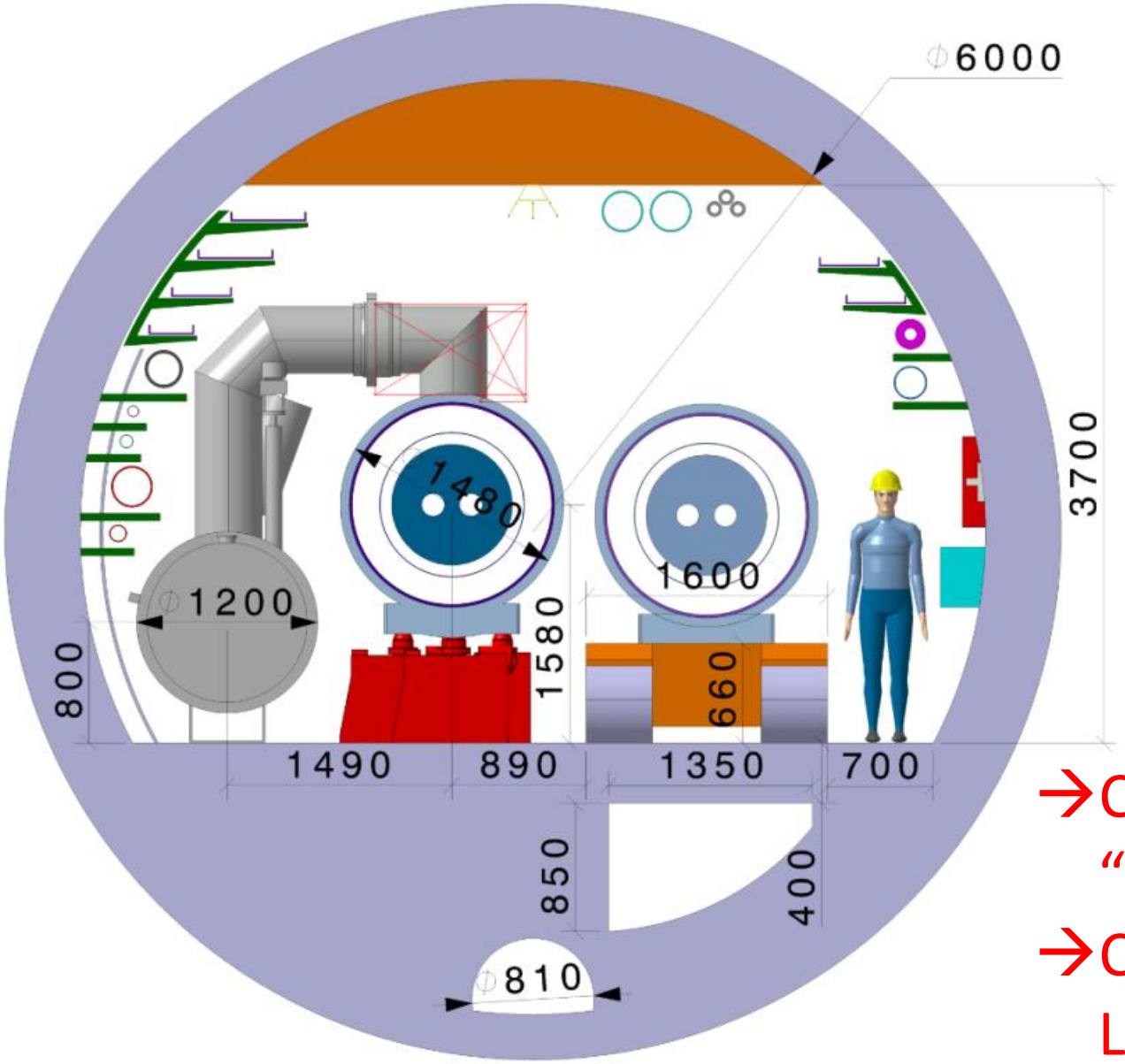

- 960 mm dipole OD (~ 600 kN!)
- magnetic flux contained in yoke
- 1480 mm dipole cryostat (~100 kN!) (external envelope)
- 1200 mm cryo distribution line ext.diameter
- 1600 mm transport vehicle
- 700 mm side passage

→Can we make the cryo-dipole more "compact" ?

→Can we dream of making it fit in the LHC tunnel ? (HE-LHC)

LHC dipole

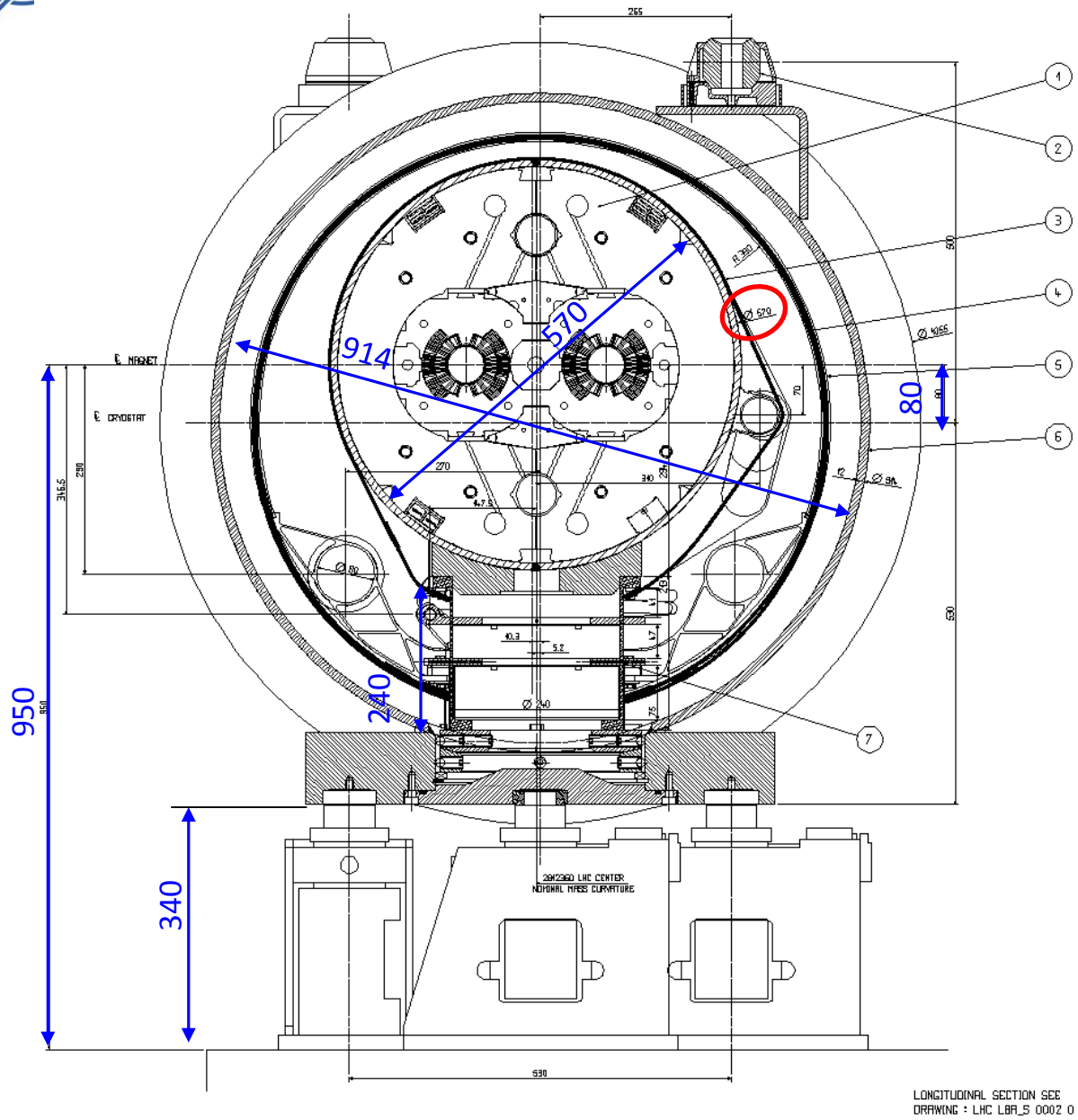

Main features:

- 270 kN dipole weight
- magnetic flux contained in yoke (no leakage to tunnel)
- 53 mm beam pipes ID
- 195 mm beam pipes spacing
- 914 mm low carbon steel vessel
- 50-65 K thermal shield with MLI
- 4-mm thick composite support posts with 2 heat intercepts (5-20 K and 50-65 K)

Salient geometrical figures:

- 570 mm OD dipole
- 950 mm beam height to floor
- 914 mm OD vac.vessel, 12 mm thick
- 1055 mm cryostat ext.envelope (reinforcements)
- 80 mm vertical off-set dipole/cryostat
- 240 mm OD support posts
- 210 mm support posts height, composite material, 4 mm thick
- 100 mm reinforcement cradle
- 340 mm jacks height

LHC dipole

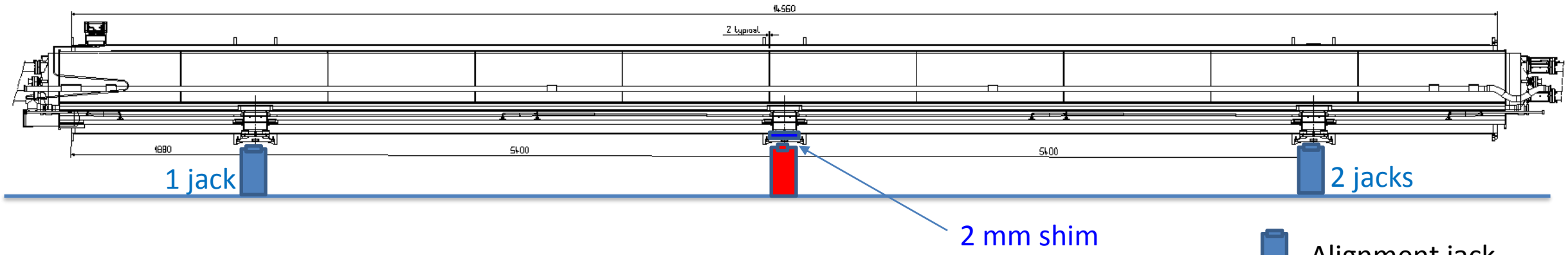

Alignment jack

Vertical sag. compensation jack

- 15160 mm dipole length
- 14560 mm vac, vessel length
- 3 supports, each takes ~ 100 kN weight
- Cryo-dipole alignment with 3 external jacks (blue);
- Central jack (red) for + 2 mm vertical sag compensation in the machine
- Jacks positioned under support posts → direct load transfer, vessel needs minimal reinforcements
- At cryostat assembly: dipole central support shimmed +2 mm; without central jack cryostat sags – 4 mm; after central jack compensation (+ 2 mm vertical), dipole is levelled, and cryostat keeps – 2 mm sag

Cryostat design approach for FCC/HE LHC:

→ *Capitalize on LHC's investment*
→ *Performance and Industrialisation for a large series*

- Preserve LHC dipole cryostat principles/parameters as far as possible :
  - Dipole cold mass **length**
  - Dipole **cryostat assembly** and related cryostat features
  - 3 column-type **cold mass supports** (redesigned for higher loads)
  - Same **jacks** (including central) and aligned with cold mass supports
  - **Vacuum vessel** main **design features** (e.g. reinforcements, material)
  - Beam height at 950 mm (nice to have but not essential)

- Reconsider some of the requirements and re-design cryostat components:
  - **Stray field** to vacuum vessel and tunnel (magnet more compact): evaluate impact (e.g. electromagnetic couplings, shielding, field leakage to tunnel), design impact on cryostat/cold mass (concentric or not?)
  - **No 4.6-20 K temperature level** (BS cooling at 40-60 K) → impact on thermal performance
  - Re-design and compare performance (mechanical + thermal) with LHC:
    - Vacuum vessel → new design (cross sectional dimensions)
    - Cold mass supports → new design
    - Thermal shielding and MLI → new design

- Evaluate impact on performance and industrialisation

Assembly of dipole cryostats at CERN: 1232 units in 4yrs

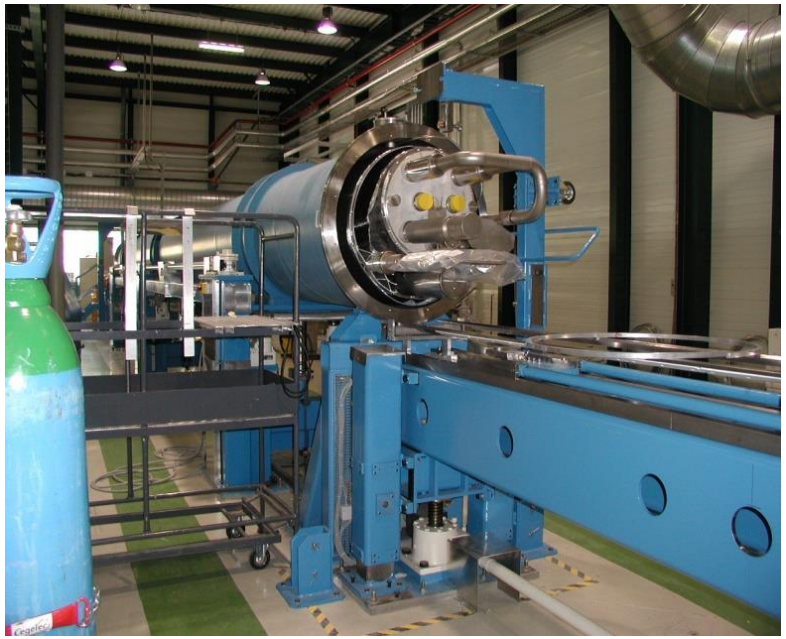

Key Figures:

- 1232 units in 4 yrs
- 30 FTE workers
- 3 hydraulic assembly benches
- Peak rate of 45 units/month (on 2 shifts)

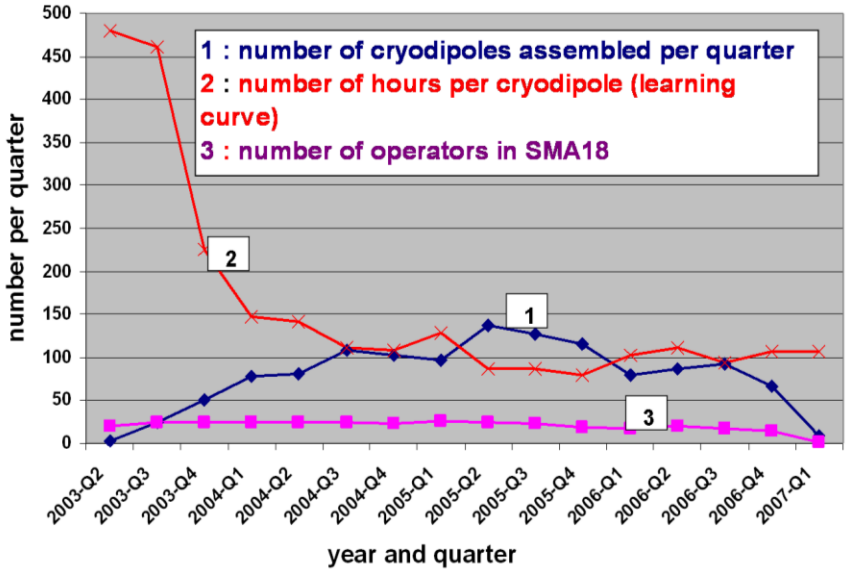

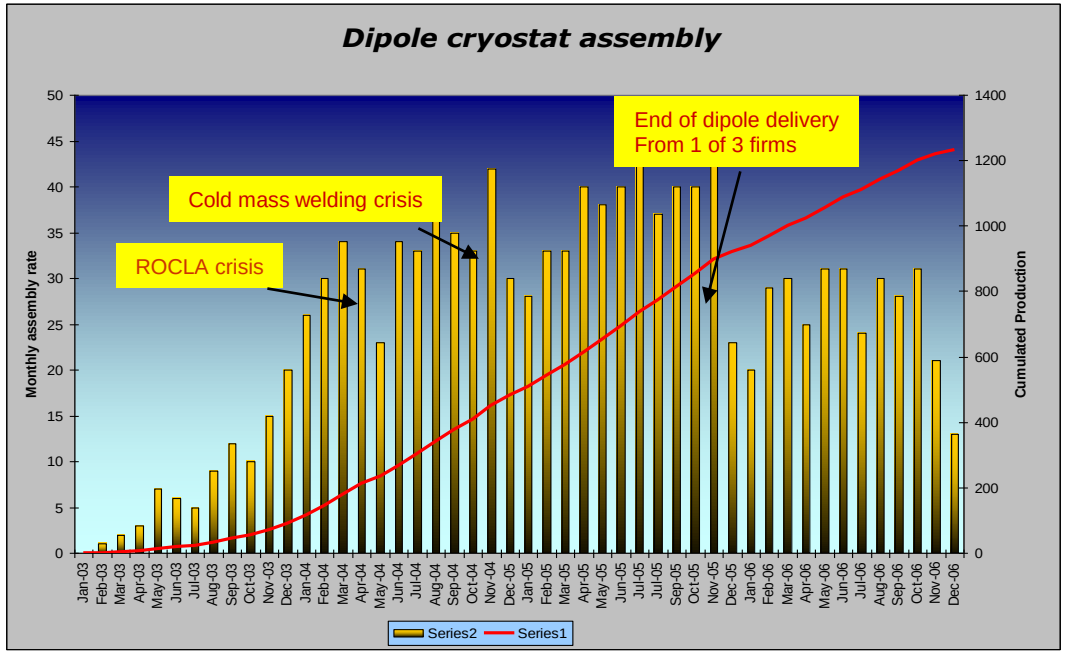

Cosϑ as reference design

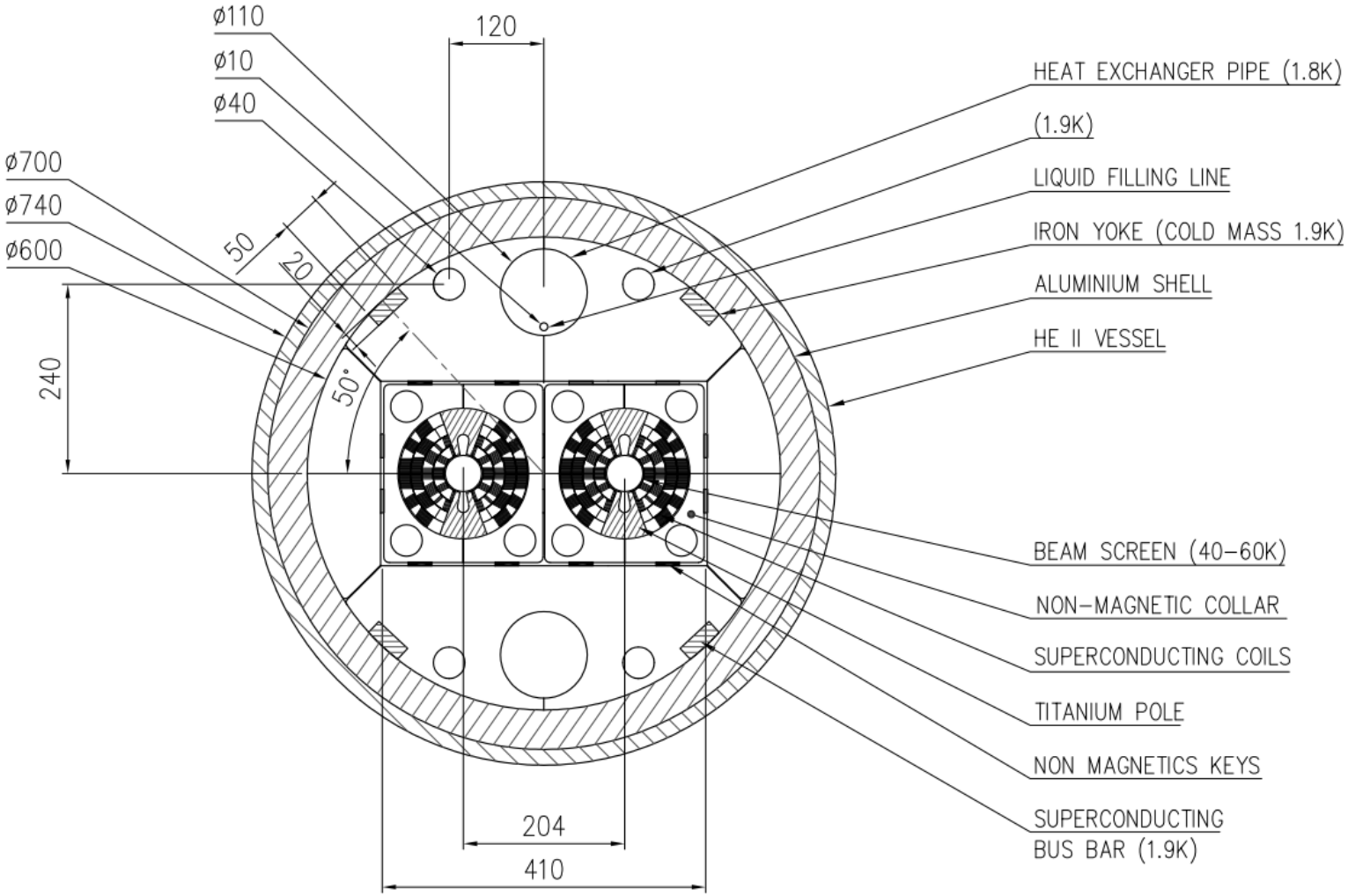

- 740 mm OD (originally 960!)
- 550 kN weight
- 20 mm helium vessel, assumed to be the only flexural stiffness element

Design Flow chart

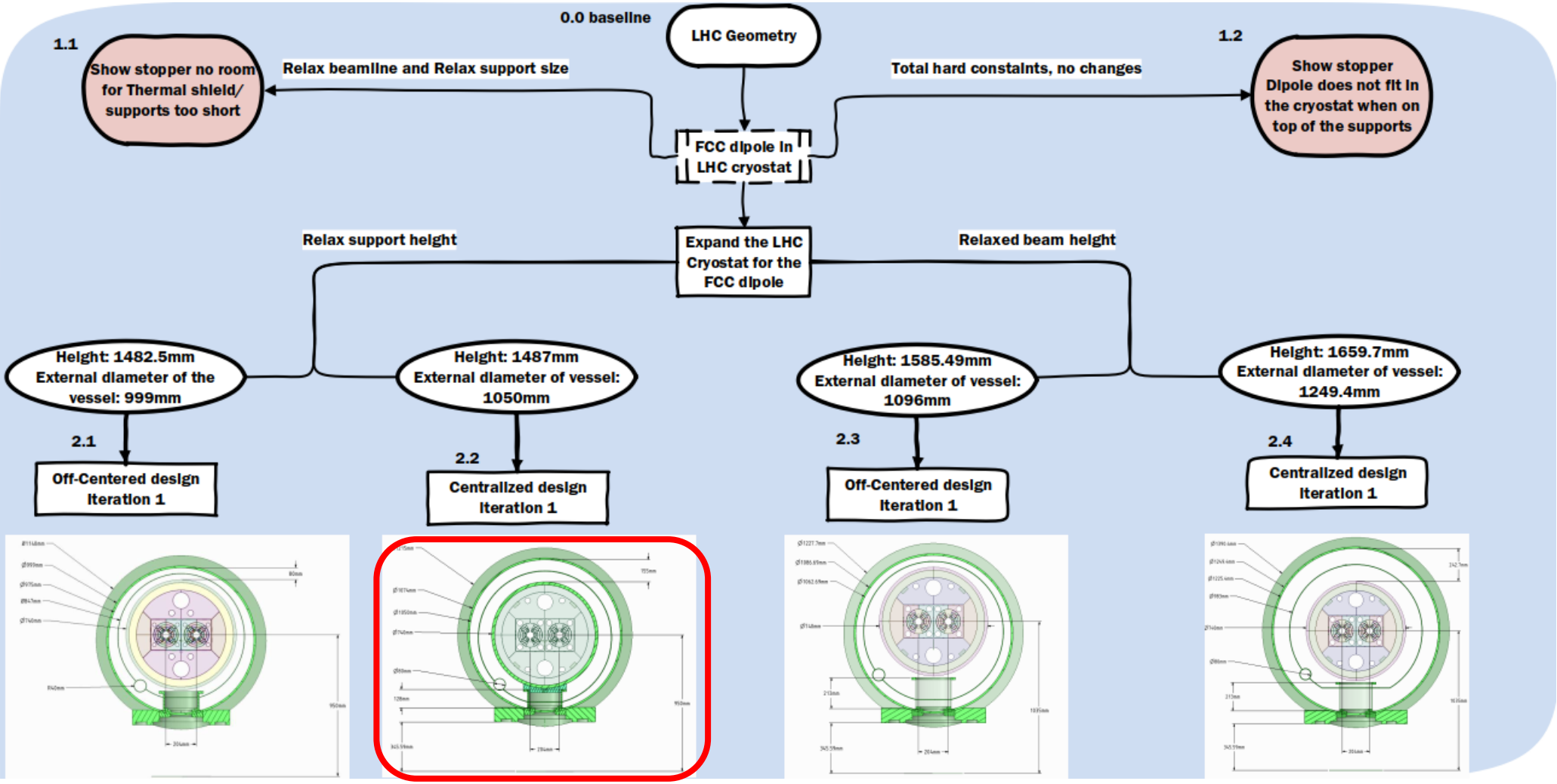

HE-LHC cooling scheme on Half-cell

HE-LHC half cell: 1 quadrupole and 6 dipoles (cold mass dimensions)

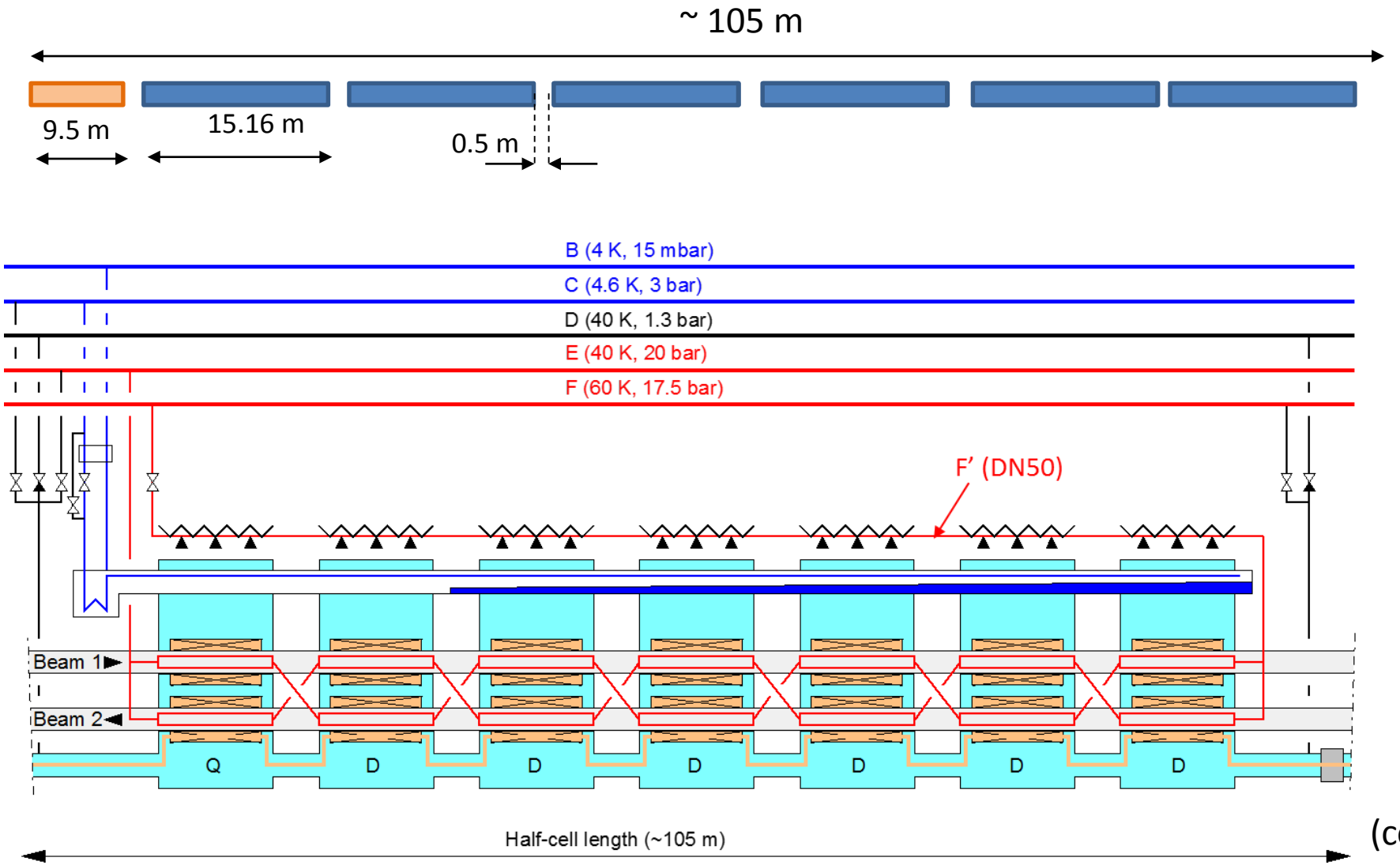

(courtesy of L.Tavian)

HE-LHC cryostat v 2.2 reference

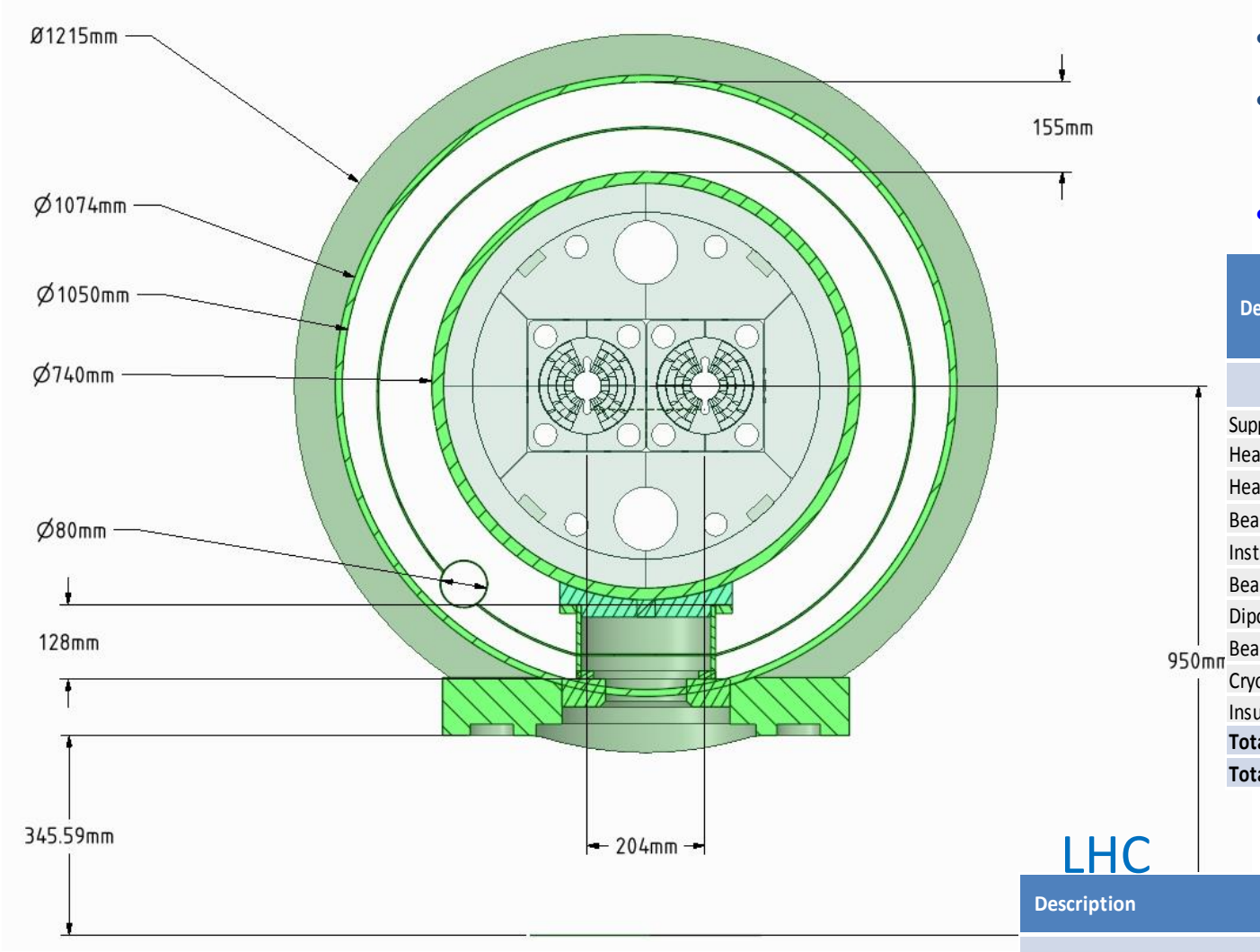

Preliminary design

- Centered geometry
- 1074 mm OD vac.vessel, 12 mm wall thickness
- 1215 mm dipole cryostat (external envelope)
- 128 mm Support post height, 8 mm wall thickness, 1 optimised position heat intercept at 40-60 K
- 46 kN Cryostat approx. weight

Description	Static HL dipole [W]		Static HL quadrupole (SSS) [W]		Static HL Cell (6 dipoles 1 SSS) [W]	
	1.9 K	40-60 K	1.9 K	40-60 K	1.9 K	40-60 K
Support posts *	3.33	129.78	2.22	86.51	22.2	865.19
Heat radiation to Thermal Shield	-	44.01	-	29.86	0	293.92
Heat radiation to Cold Mass (with IC)	1.82	-	1.23	-	12.15	0
Beam screen contacts and feedthroughs **	1.8192	-	1.14	-	12.0552	0
Instrumentation feed-through	0.53	-	0.53	-	3.71	0
Beam vacuum feed-through			0.21	1.2	0.21	1.2
Dipole corrector feedthrough (60 A)			0.267	5.2	0.267	5.2
Beam position monitor			0.302	-	0.302	0
Cryogenic piping			0.12	-	0.12	0
Insulation Vacuum Barrier			0.424	11.6	0.424	11.6
Total	**7.499**	**173.79**	**6.443**	**134.4**	**51.4382**	**1177.1**
Total [W/m]	**0.479**	**11.1**	**0.606**	**12.6**	**0.490**	**11.2**

in red: rescaled values (from thermal models), other values are from LHC HLWG

LHC

Description	Static HL Dipole [W]			Static HL Quadrupole (SSS) [W]			Static HL Cell (6 dipoles 1 SSS) [W]		
	1.9 K	4.6-20 K	50-65 K	1.9 K	4.6-20 K	50-65 K	1.9 K	4.6-20 K	50-65 K
Total	**2.597**	**1.47**	**65.1**	**2.626**	**2.64**	**51.5**	**20.834**	**14.08**	**493.4**
Total [W/m]	**0.166**	**0.094**	**4.2**	**0.406**	**0.41**	**8.0**	**0.195**	**0.13**	**4.6**

HE-LHC cryostat v 2.3 alternative

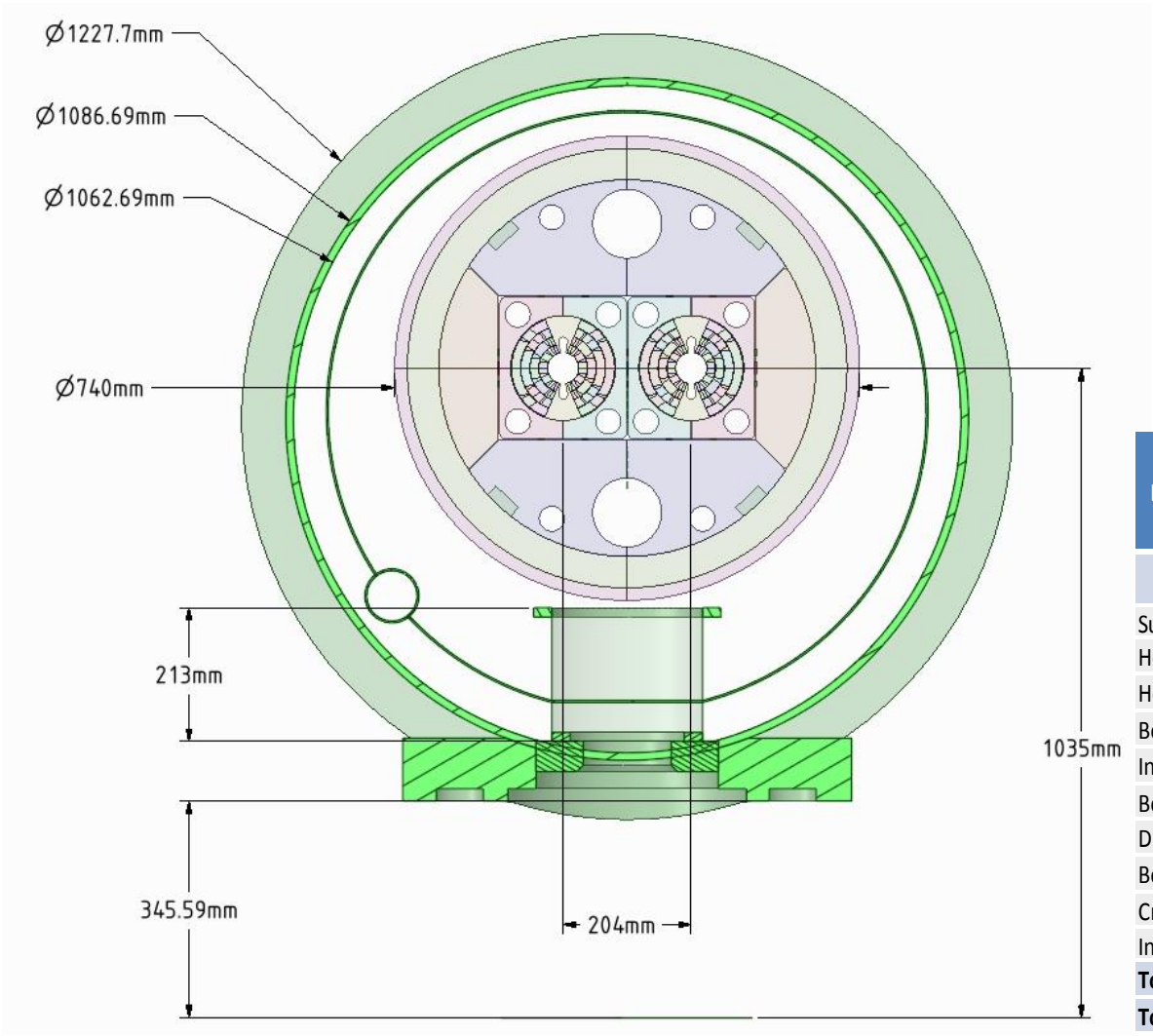

- Off-centered geometry (LHC-like): electro-magnetic forces to cryostat to be assessed!
- 1087 mm OD vac.vessel, 12 mm wall thickness
- 1228 mm dipole cryostat (external envelope)
- 213 mm Support post height, 8 mm wall thickness, 1 optimised position heat intercept at 40-60 K

Description	Static HL dipole [W]		Static HL quadrupole (SSS) [W]		Static HL Cell (6 dipoles 1 SSS) [W]	
	1.9 K	40-60 K	1.9 K	40-60 K	1.9 K	40-60 K
Support posts *	1.83	64.89	1.22	43.26	12.2	432.6
Heat radiation to Thermal Shield	-	47.11	-	31.96	0	314.62
Heat radiation to Cold Mass (with IC)	1.82	-	1.23	-	12.15	0
Beam screen contacts and feedthroughs **	1.8192	-	1.14	-	12.0552	0
Instrumentation feed-through	0.53	-	0.53	-	3.71	0
Beam vacuum feed-through			0.21	1.2	0.21	1.2
Dipole corrector feedthrough (60 A)			0.267	5.2	0.267	5.2
Beam position monitor			0.302	-	0.302	0
Cryogenic piping			0.12	-	0.12	0
Insulation Vacuum Barrier			0.424	11.6	0.424	11.6
Total	**5.999**	**112.00**	**5.443**	**93.2**	**41.4382**	**765.2**
Total [W/m]	**0.383**	**7.2**	**0.512**	**8.8**	**0.395**	**7.3**

Preliminary design

in red: rescaled values (from thermal models), other values are from LHC HLWG

Simple beam theory

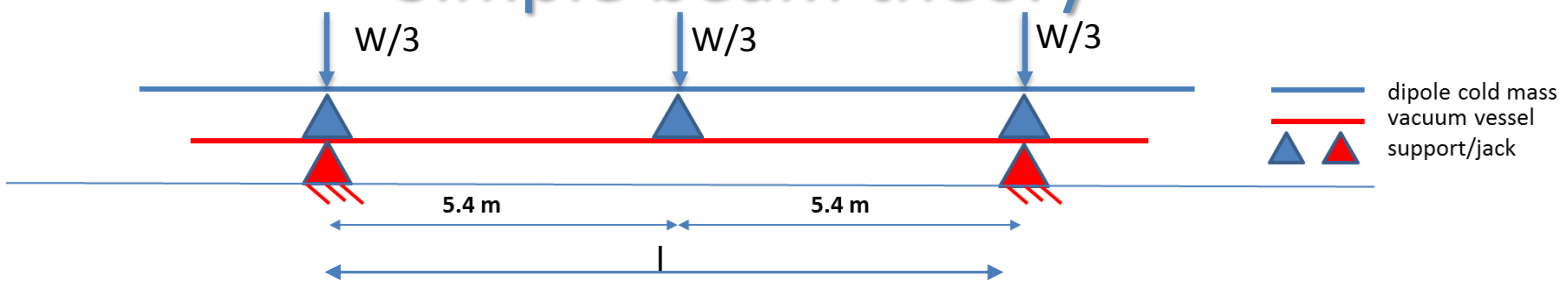

Property		Value		Unit
		LHC	FCC/HE LHC v.2.2	
CM weight (W)		270	550	kN
He vessel OD		570	740	mm
He vessel wall thickness		10	20	mm
He vessel flex.stiffness (EJ), (only He vessel, conservative)		131	557	MPa. m^4
Vac.Vessel OD		914	1074	mm
Vac.Vessel wall thickness		12	12	mm
Vac.Vessel flex.stiffness (EJ)		756	1226	MPa. m^4
δvv (max.sag VV)	$\frac{Wl^3}{48EI}$	3.1	3.8	mm
δcm (max.sag cold mass on 2 extremity supports)  Conservative assumption	$\frac{5}{384}\frac{Wl^3}{EI}$	24	11.3	mm
σ cm (max.stress in vessel)	$-\frac{Wl}{8Z}$	563	51	Pa
ε max coil	$\frac{48}{5} * \frac{\delta cm}{l^2} * z$	140	66 (<< 1000)	με

Self-weight with and without central jack

LHC

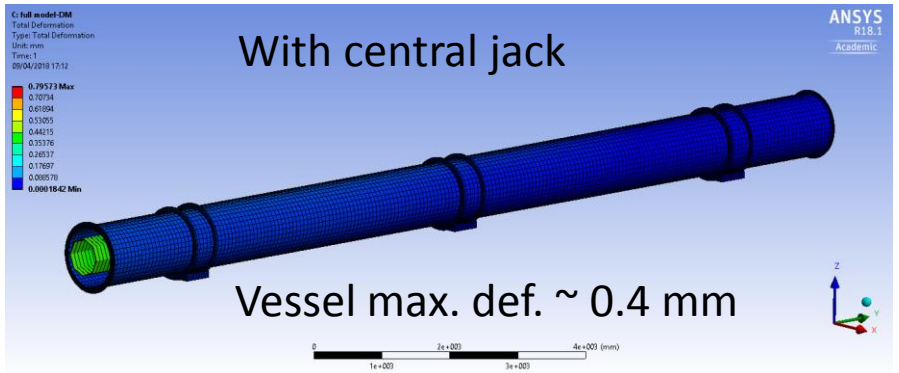

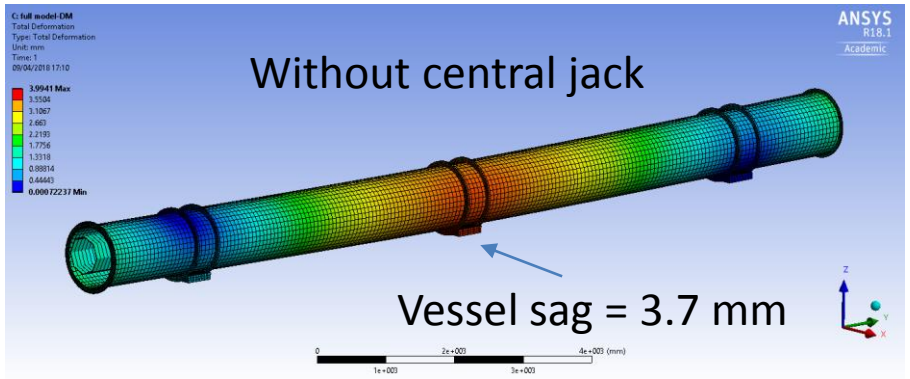

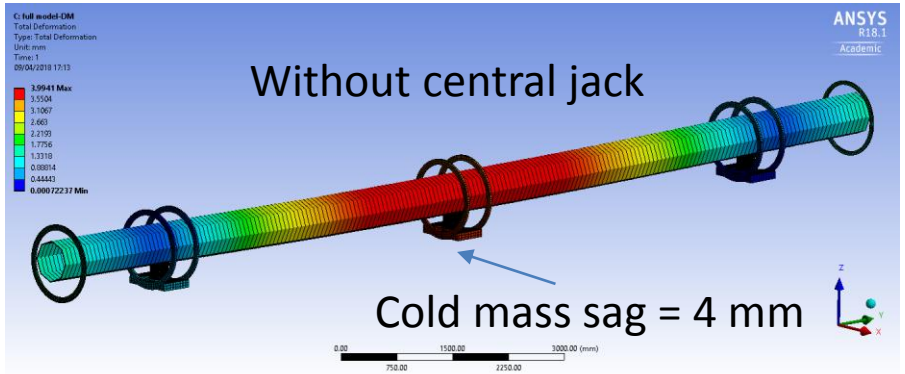

FCC HE LHC v.2.2

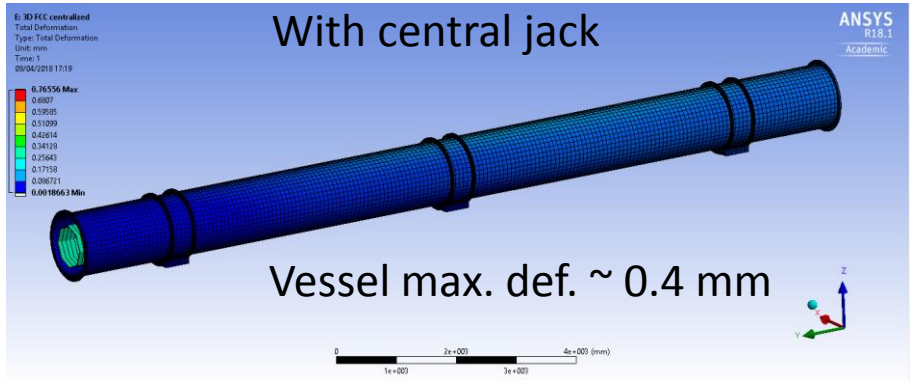

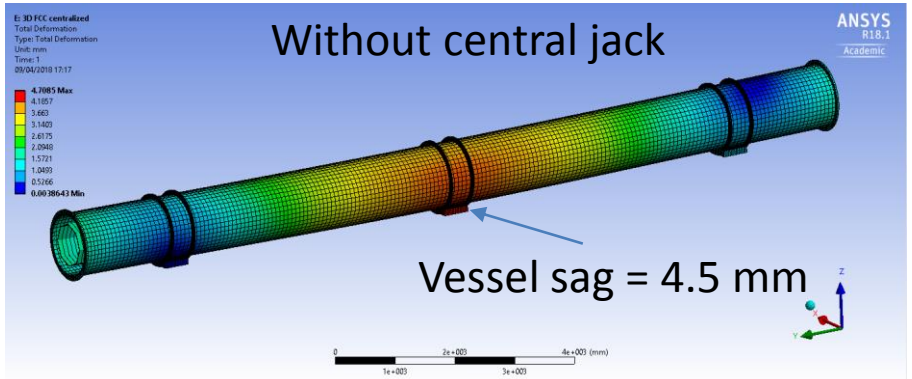

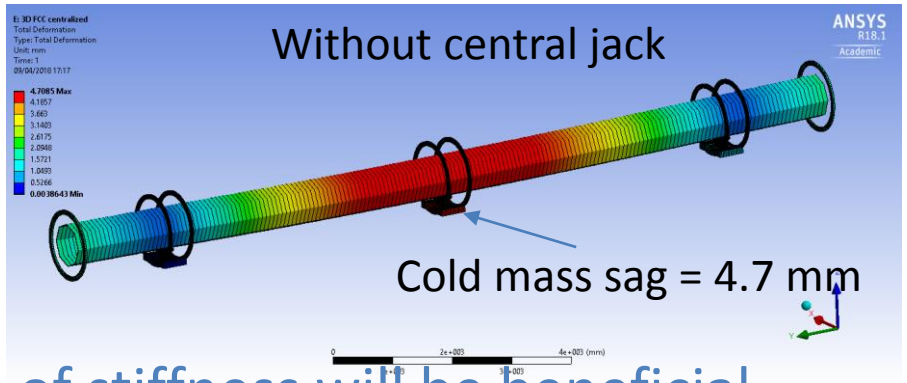

Comparable to LHC, but some increase of stiffness will be beneficial

HE-LHC integration, cryostat v.2.2

Preliminary:

- No CE mo
- Limited b
  for transp

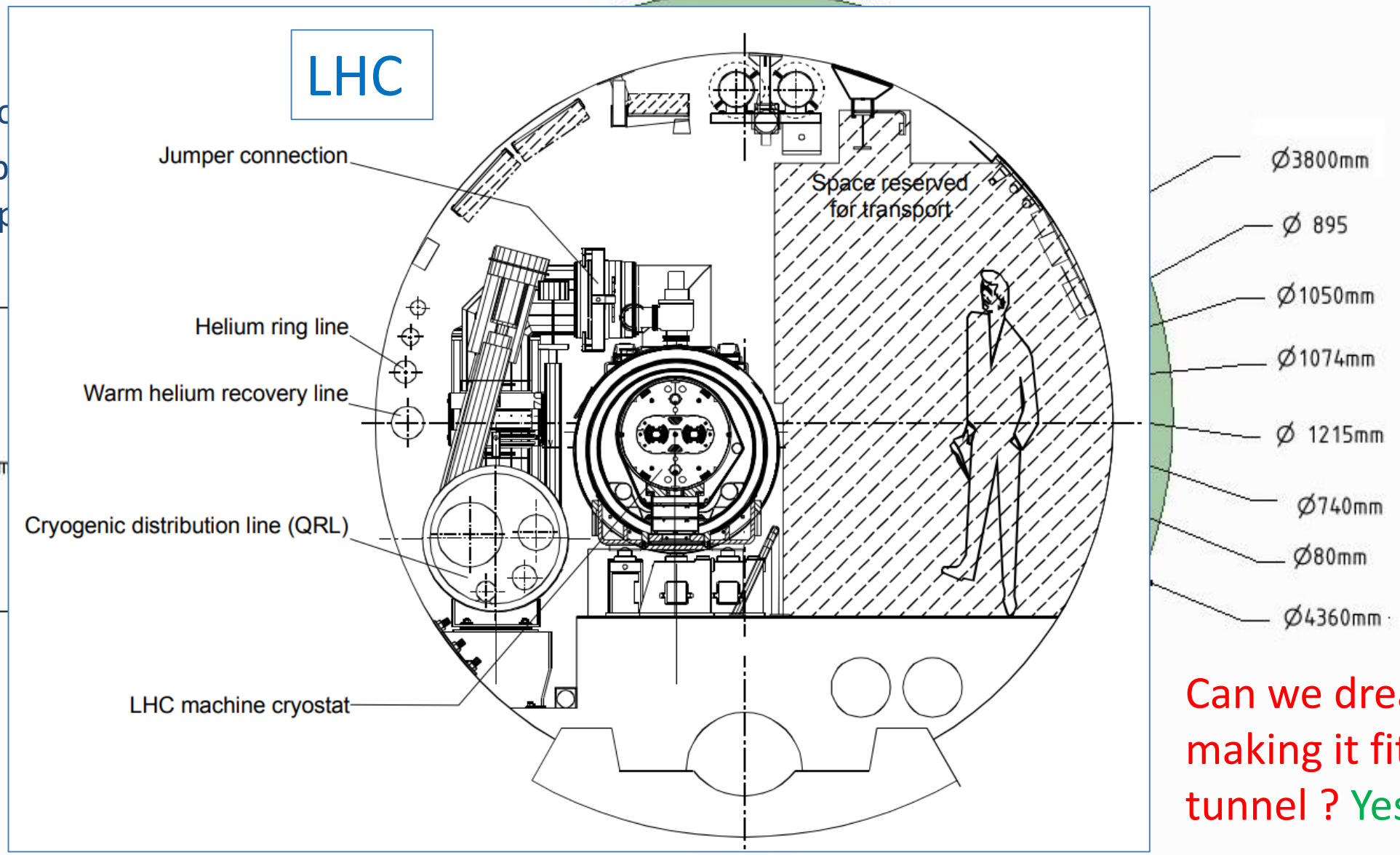

Can we dream of making it fit in the LHC tunnel ? Yes we can!

Summary and Outlook

- The design approach for FCC HE LHC: adopt (adapt), whenever possible, proven solutions of the LHC
- Design solutions compatible with the LHC tunnel are possible, keeping the main features of the LHC dipole cryostats
- Preliminary design solutions elaborated with a preference for one: reference v.2.2
- Static thermal performance estimates elaborated, providing valuable input for cryogenic HL budgets
- First mechanical calculations confirm that the cryostat assembly principles of the LHC dipole can be preserved
- Next steps involve calculating the electro-magnetic coupling magnet/cryostat due to the stray field and calculating the residual field spilling to the tunnel (electromagnetic compatibility with electronics)
- Exploring other design solutions (e.g. off-centered solutions, magnetic shielding solutions) will be continued with the goal of enhancing performance (both thermal and mechanical)


Thank you for your attention!
Bedankt voor uw aandacht!