Progress of the High Field Magnet R&D for CEPC-SPPC

Qingjin XU

On behalf of the SPPC magnet working group

Institute of High Energy Physics (IHEP), Chinese Academy of Sciences (CAS)

April 11 2018

Contents

- SPPC Magnet Design Scope
- Domestic Collaboration Towards HTS SPPC
- Conceptual Design of the SPPC Dipole Magnet
- High Field Dipole Magnet R&D
  - *fabrication and test of the 1st model dipole magnet*
  - *plan for the 2nd model dipole*
- CERN-China HL-LHC Collaboration
- Summary

SPPC Magnet Design Scope (V201701)

SPPC

- ***100*** *km in circumference*
- *C.M. energy 70-150 (Upgrading) TeV*
- *Timeline*

Pre-study:	*2013-2020*
R&D:	*2020-2030*
Eng. Design:	*2030-2035*
Construction:	***2035-2042***

Main dipoles $E[GeV] = 0.3 \times B[T] \times \rho[m]$

- *Field strength: 12~24 (Upgrading) Tesla*
- *Aperture diameter: 40~50 mm*
- *Field quality: 10^{-4} at the 2/3 aperture radius*
- *Outer diameter: 650-900 mm in a 1.5 m cryostat*
- *Tunnel cross section: 6 m wide and 5.4 m high*

SPPC Layout

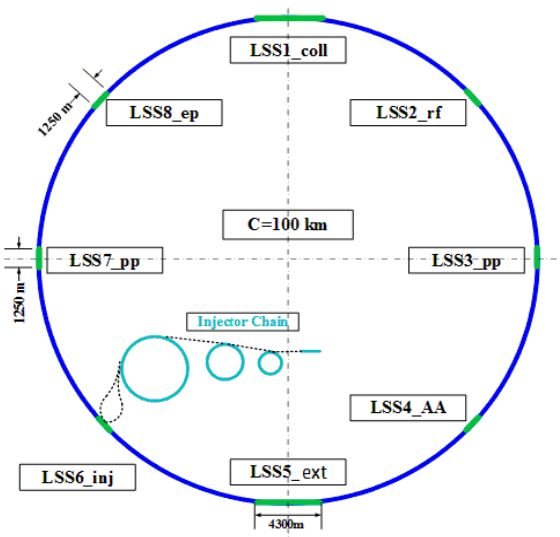

6-m Tunnel for CEPC-SPPC

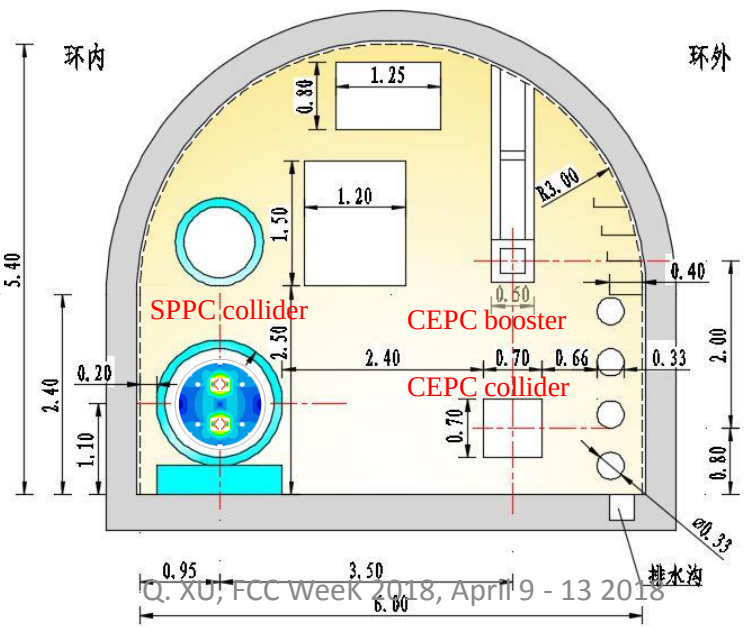

Conceptual design of the SPPC 12-T magnet with IBS and common coil configuration

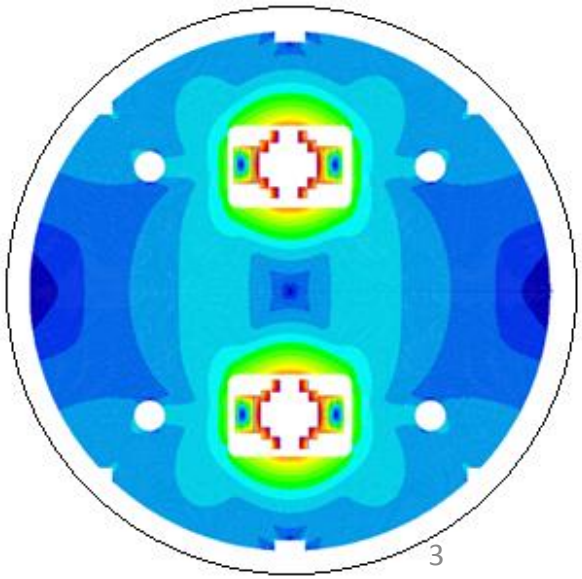

SPPC Magnet Design Scope

Top priority: reducing cost!
Instead of increasing field

Make IBS the high-field "NbTi" Conductor in 10 years!

- **Baseline design**
  - Tunnel circumference: 100 km
  - Dipole magnet field: 12 T, iron-based HTS technology (IBS)
  - Center of Mass energy: >70 TeV
  - Injector chain: 2.1 TeV
- **Upgrading phase**
  - Dipole magnet field: 20 -24T, IBS technology
  - Center of Mass energy: >125 TeV
  - Injector chain: 4.2 TeV (adding a high-energy booster ring in the main tunnel in the place of the electron ring and booster)
- **Development of high-field superconducting magnet technology**
  - Starting to develop HTS magnet technology before applicable IBS wire is available
  - ReBCO & Bi-2212 and LTS wires be used for model magnet studies and as options for SPPC: stress management, quench protection, field quality control and fabrication methods

Domestic Collaboration for HTS R&D

"Applied High Temperature Superconductor Collaboration (AHTSC)" formed in Oct. 2016.

Including 18 institutions and companies in China. Regular meeting every 3 months.

- ***Goal :***

a) *1) To increase the J_c of irc* *times, reduce the cost to* ***20 Rmb/kAm @ 12T & 4.2K,*** *ne conductor;*

b) *2) To reduce the cost of R* *Rmb/kAm @ 12T & 4.2K;*

c) *3) Realization and Industr* *vities.*

- ***Working groups :*** *1)* ***Fu*** *conductor R&D; 3)* ***ReBCO*** *conductor R&D; 4)* ***Bi-221*** *evaluation; 6)* ***Magnet and SRF*** *technology.*

Progress on IBS wires

Y. Ma (IEECAS) et al.

Supercond. Sci. Technol. 31 (2018) 015017

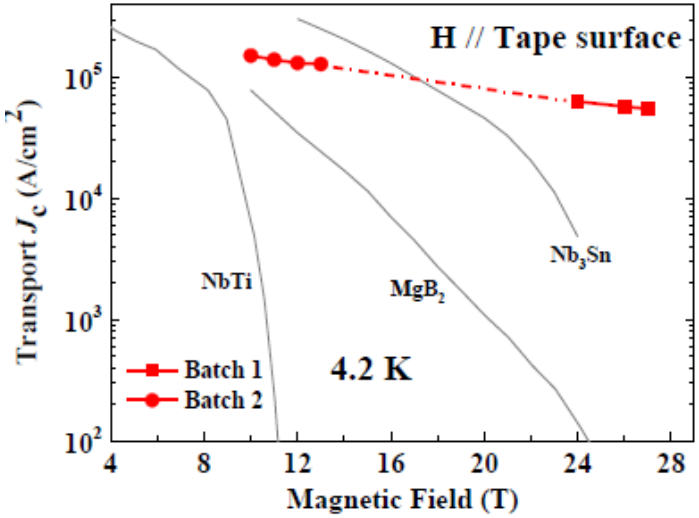

Latest transport property of IBS tape (2017):

Short tape (~4 mm wide, 0.3 mm thick):

I_c~423 A (J_c>1450 A/mm^2) @ 4.2 K, 12 T

100 meter long tape:

J_c>200 A/mm^2 @ 4.2 K, 12 T

Key steps to the application

115 meter long 7-core tape

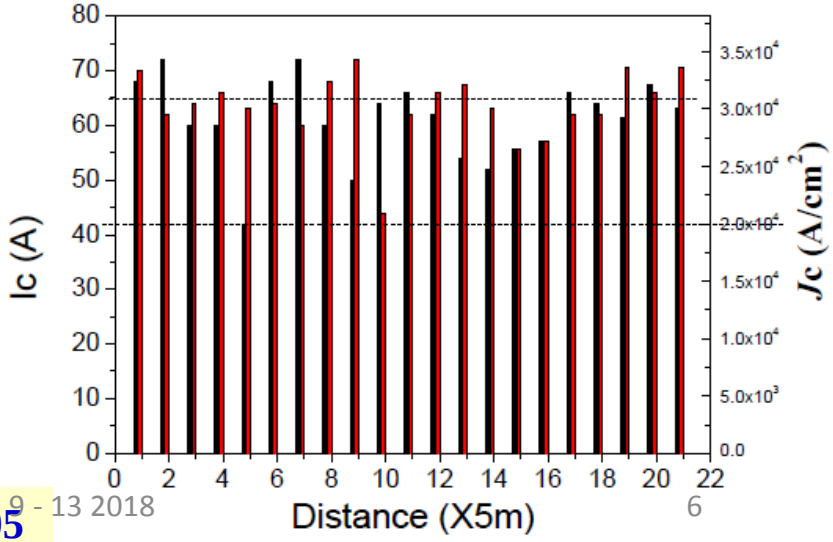

IEEE TAS 27 (2017) 7300705

The 12-T Fe-based Dipole Magnet

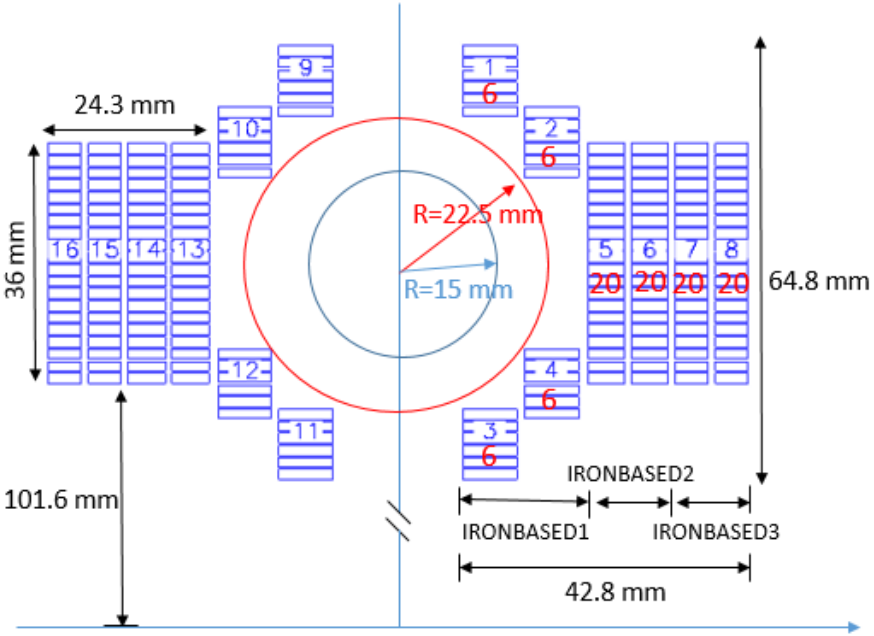

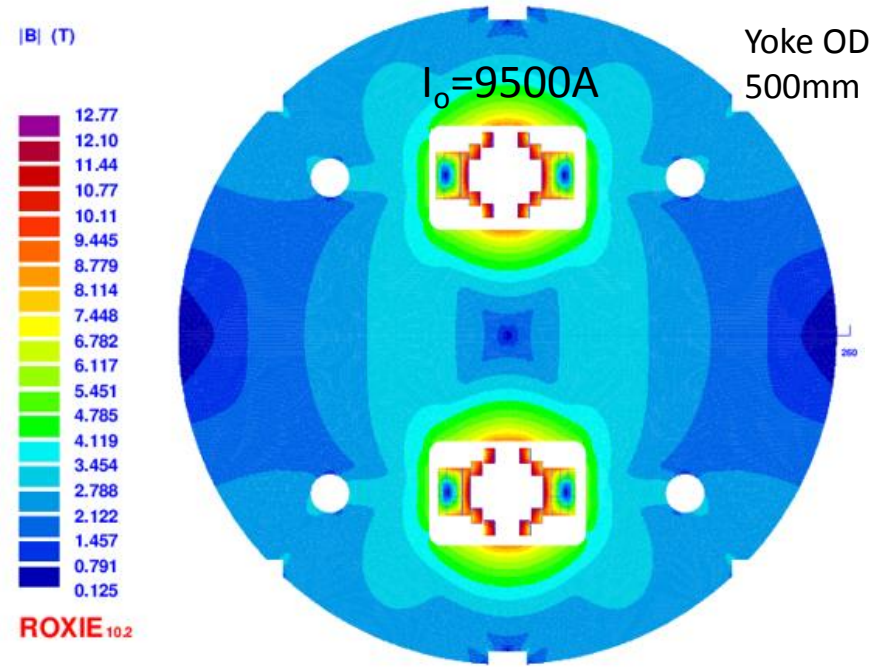

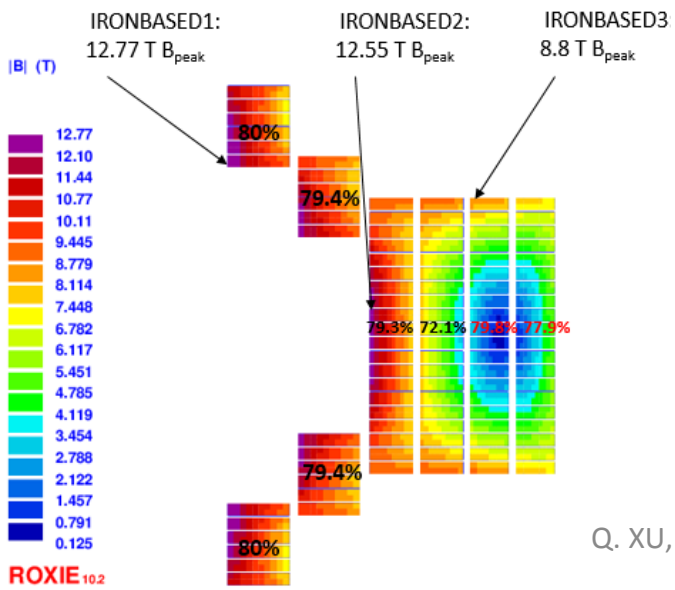

Design with expected J_e of IBS in 2025

Strand	diam.	cu/sc	RRR	Tref	Bref	Jc@ BrTr	dJc/dB
IBS	0. 802	1	200	4. 2	10	4000	111

- **The required length of the 0.8 mm IBS is 6.1 Km/m**
- **For 100-km SPPC, 3000 tons of IBS is needed**
- **Target cost of IBS: 20 RMB (~2.6 Eur) /kAm @12 T**

The 12-T Fe-based Dipole Magnet

Field quality in the aperture
<3*10^{-4} within 2/3 bore
(ROXIE simulation results)

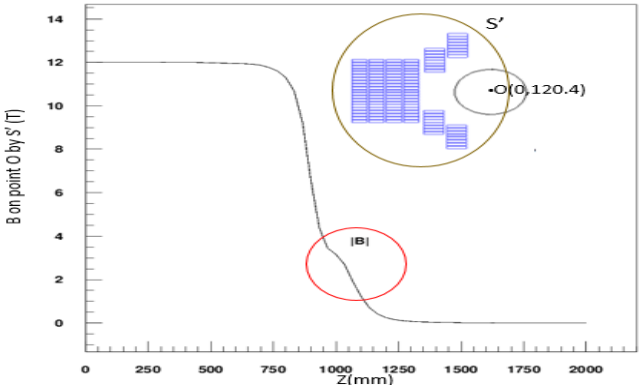

Field quality	2D with R_f= 13.3mm	3D with R_f= 8/13.3 mm
b3	0.45	0.79/1.91
b5	1.01	-0.65/-2.24
b7	0.46	0.08/0.67
b9	-0.27	-0.13/-0.22
a2	3.53	-1.00/-2.31
a4	0.49	-0.46/0.69
a6	0.33	0.26/2.49
a8	0.58	-0.12/0.84
a10	2.23	0.06/2.18

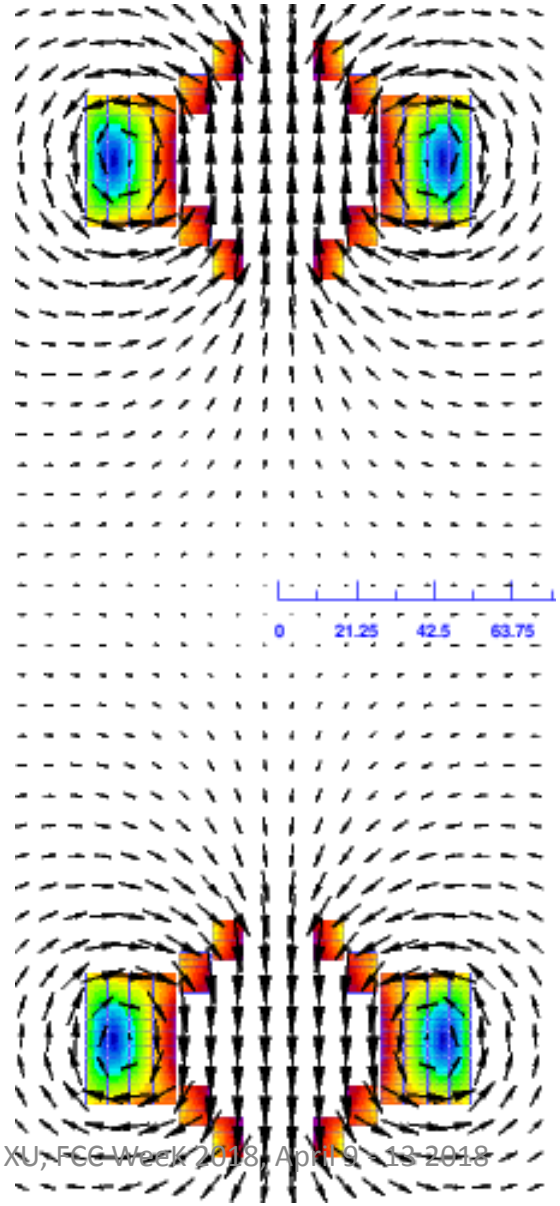

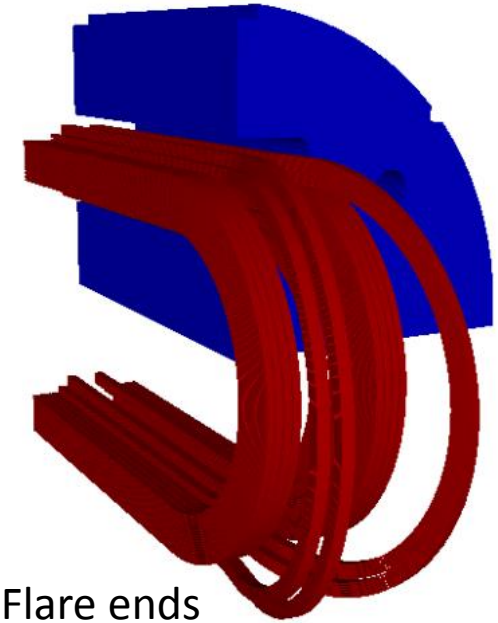

Flare ends

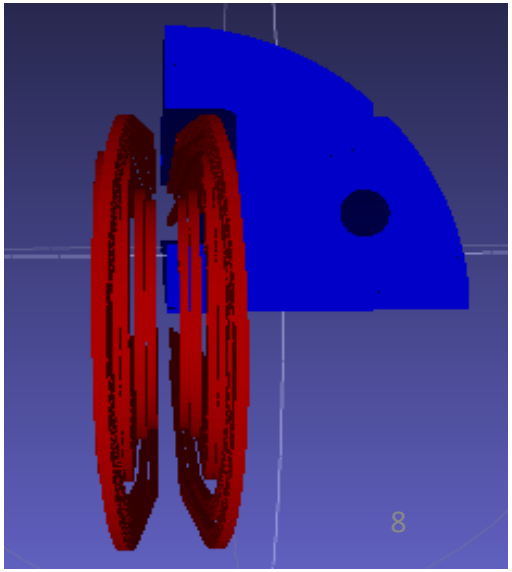

R&D of 12T Twin-aperture Dipole Magnet

R&D Roadmap for the next 10~15 years

NbTi+Nb_3Sn, 2*ϕ10 aperture → **Nb_3Sn+HTS, 2*ϕ20 aperture** → **All HTS, 2*ϕ40 aperture**

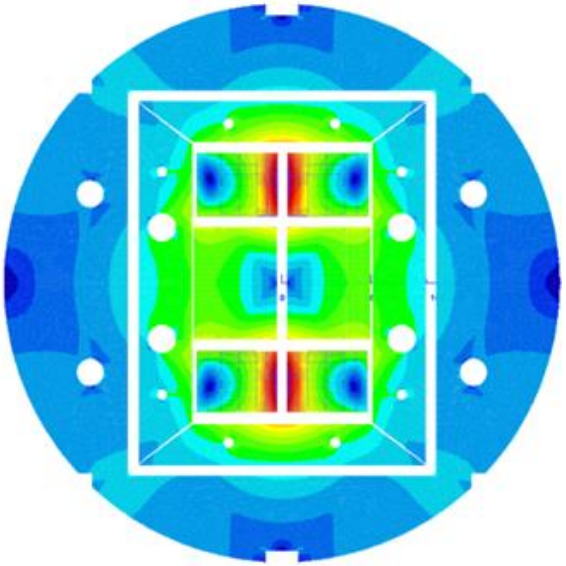

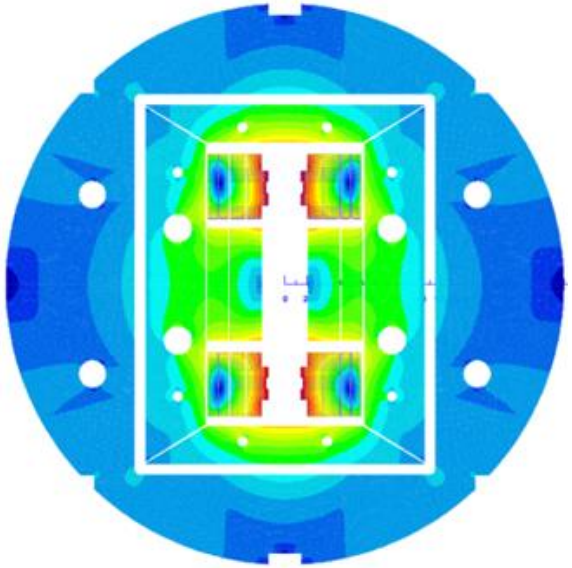

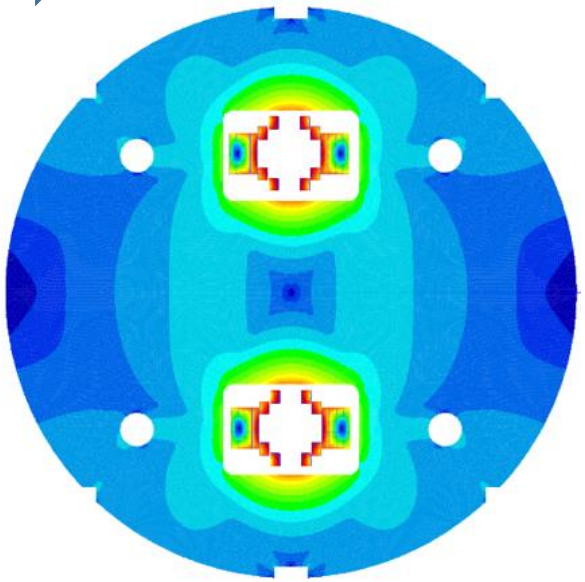

Magnetic flux distribution

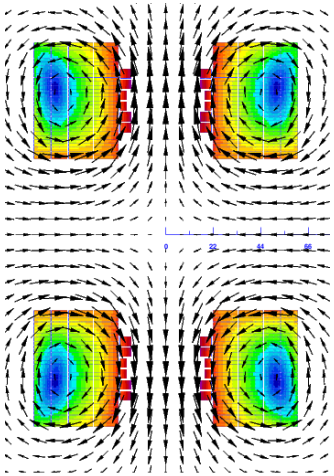

3d coil layout

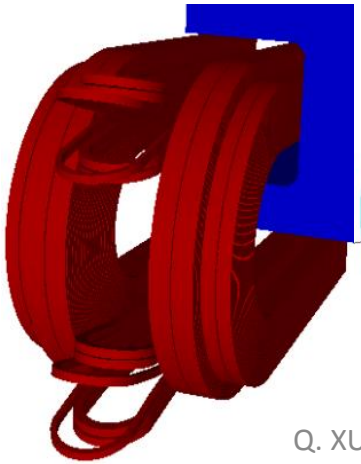

3D magnetic field distribution

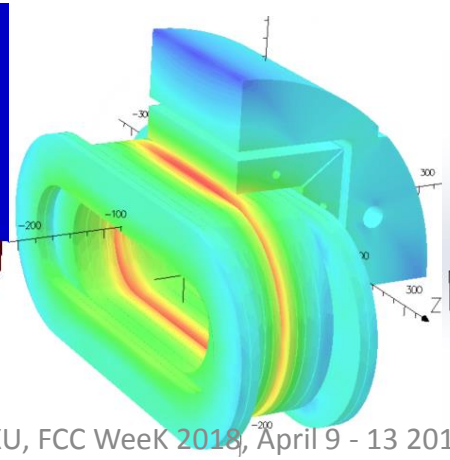

Components and assembly

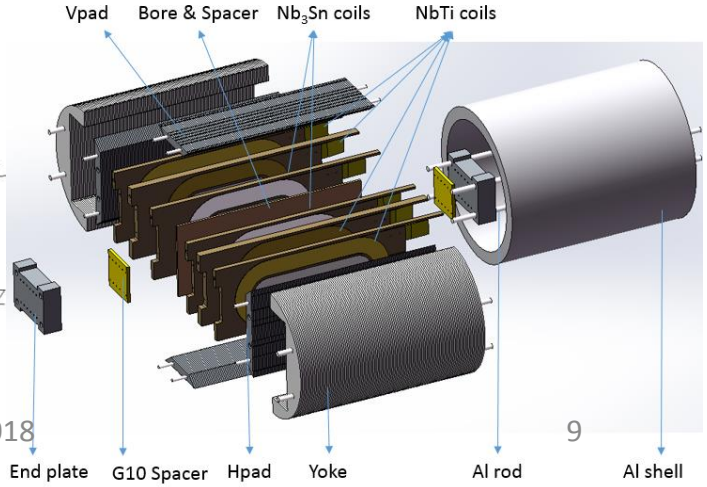

R&D of 12T Twin-aperture Dipole Magnet

Fabrication of the 1st model magnet ($NbTi+Nb_3Sn$)

Cabling ➡ Coil winding ➡ HT ➡ VPI ➡ Magnet assembly ➡ Test

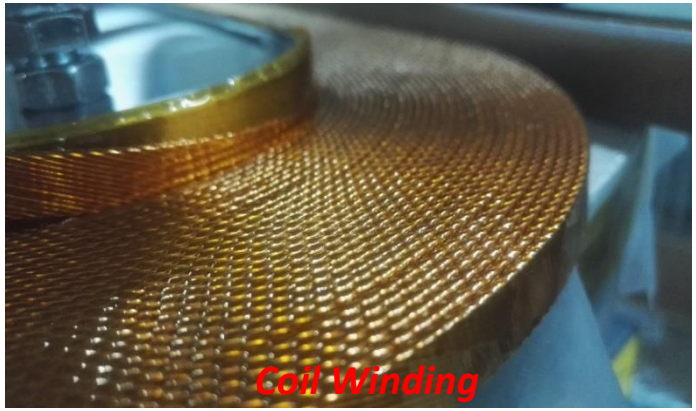

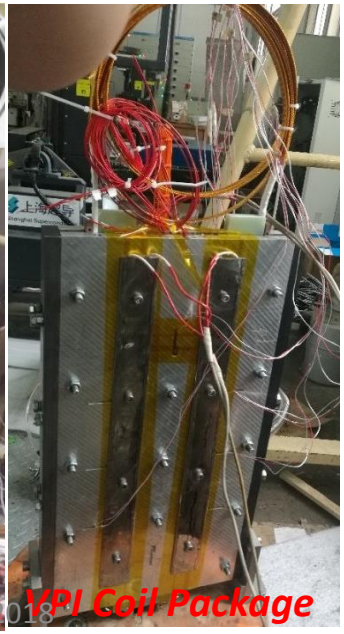

R&D of 12T Twin-aperture Dipole Magnet

1st test of the 1st model magnet (NbTi+Nb_3Sn)

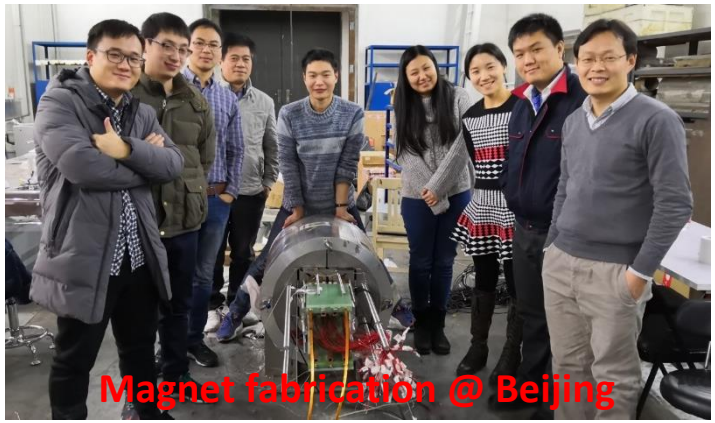

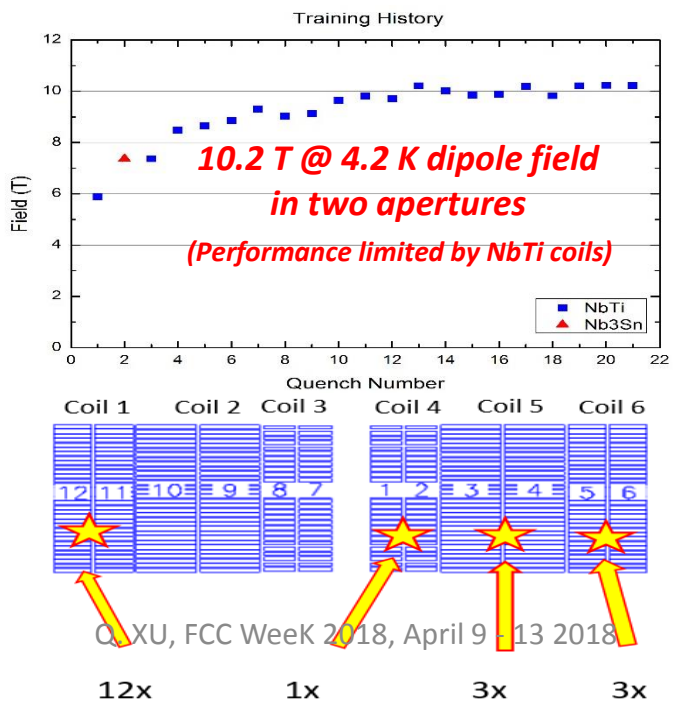

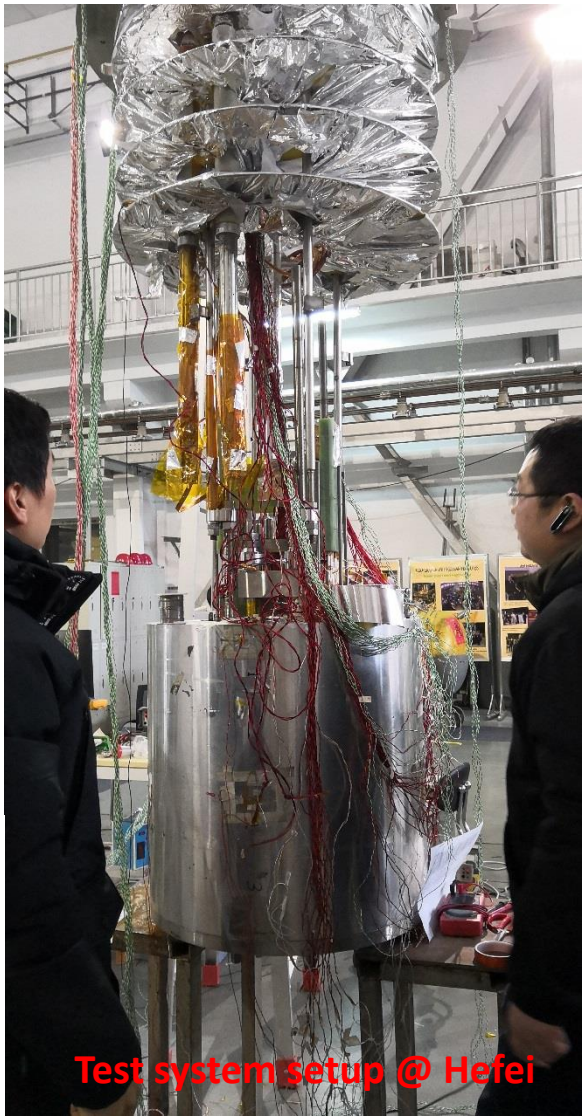

R&D of 12T Twin-aperture Dipole Magnet

Next step：Replace NbTi coils with new Nb_3Sn coils to further increase the field，and insert the IBS coil to test its high field performance.

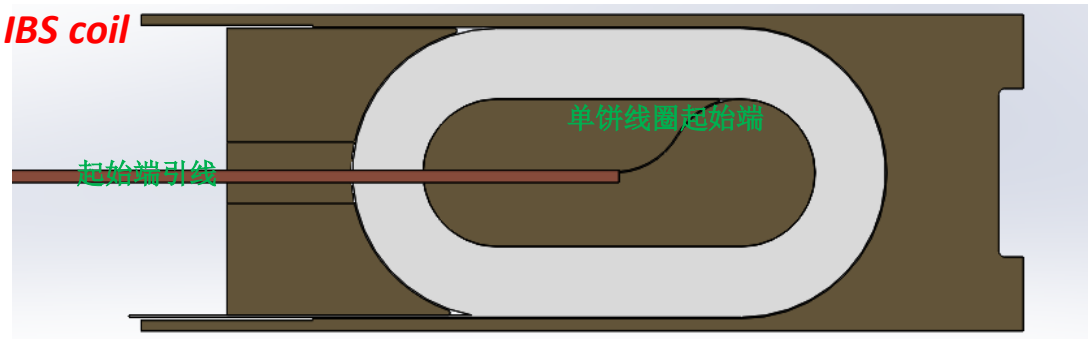

2nd model dipole magnet(Nb_3Sn+IBS)

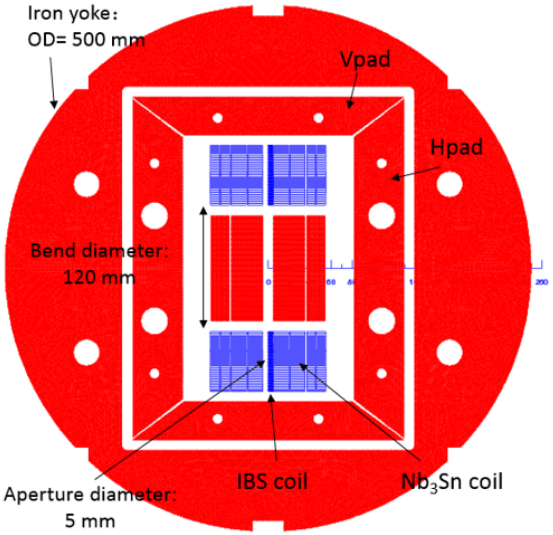

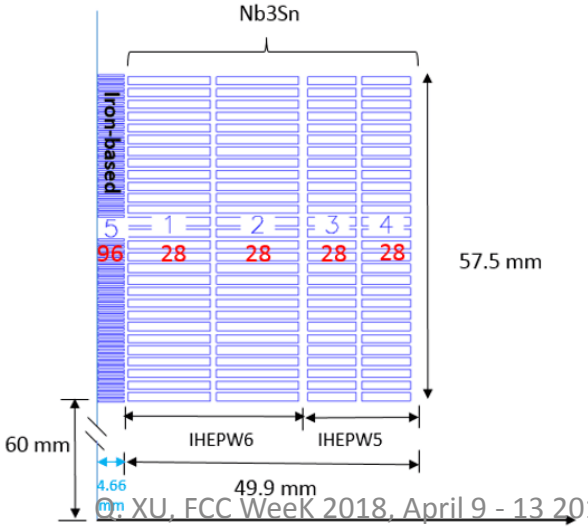

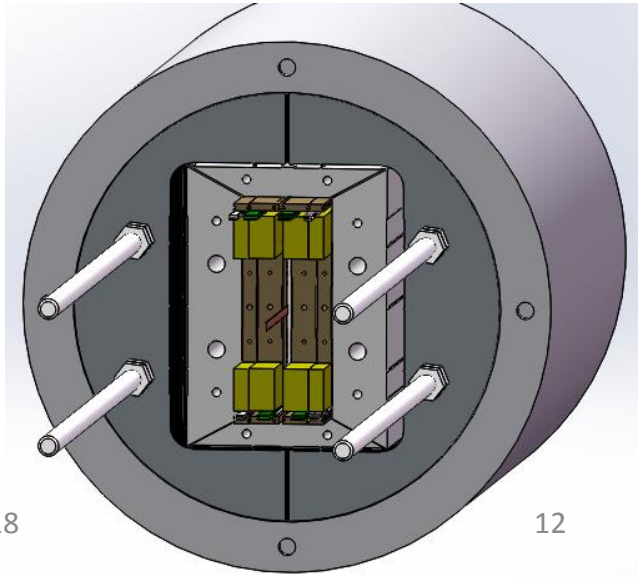

CERN & China Collaboration

Making 12 units CCT corrector magnets for HL-LHC before mid 2021
A 0.5m model magnet to be fabricated and tested by May or June 2018

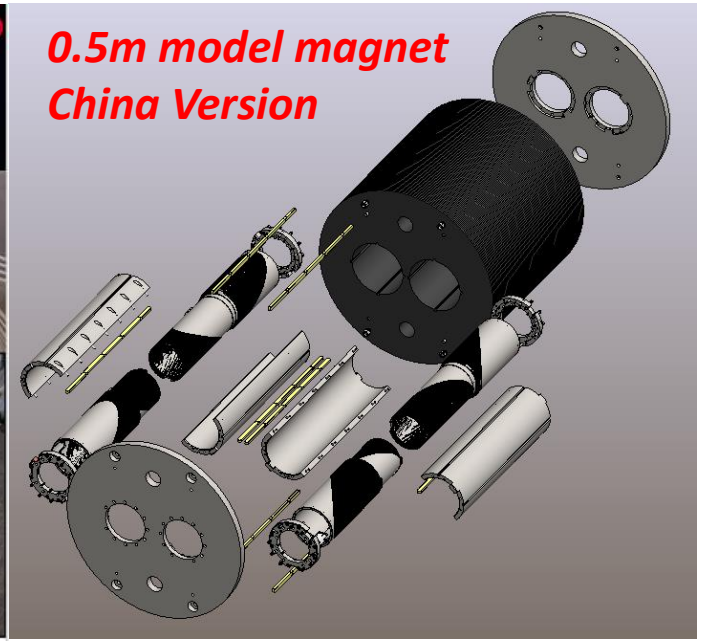

0.5m model magnet China Version

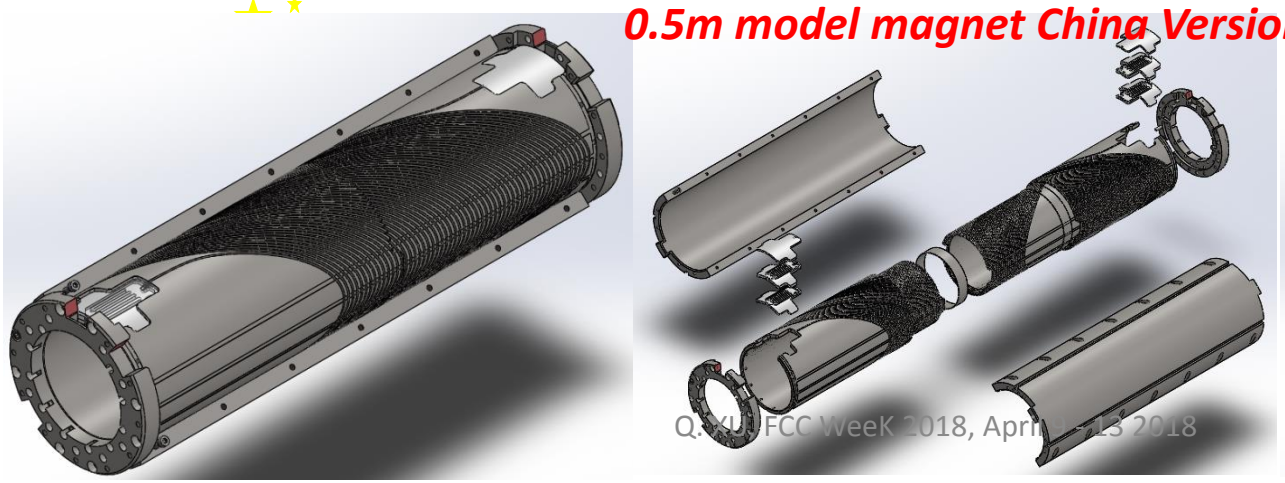

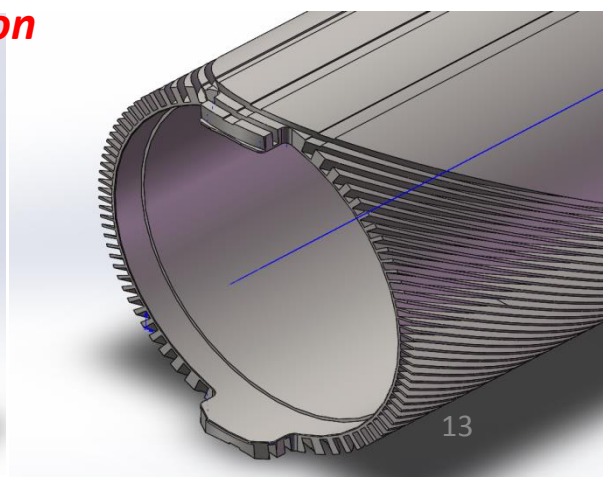

Summary

- ***SPPC design scope:*** *12 T IBS magnets to reach 70TeV with 100 km circumference. Upgrading phase: 20~24 T IBS magnets to reach 125~150 TeV.*
- *Strong domestic collaboration for the advanced HTS conductor R&D: Make IBS the high-field "NbTi" conductor in 10 years!*
- ***R&D of high field magnet technology:*** *1st model dipole (NbTi+Nb_3Sn) reached 10.2 T @ 4.2 K in two apertures; 2nd model dipole (Nb_3Sn+IBS) to be fabricated and tested in Mid 2018.*
- ***CERN & China Collaboration:*** *Making 12 units CCT corrector magnets for HL-LHC before mid 2021.*

Thanks for your attention!