# Options for the FCC Superconducting RF System

Andy Butterworth, CERN

FCC week, Amsterdam 2018

Thanks to: O Brunner, R Calaga, S Gorgi Zadeh, I Karpov, E Shaposhnikova

# Outline

- FCC-hh requirements
- FCC-ee operating modes and timeline
- Cavity designs for each operating mode
- Staging and evolution of the RF system through the program
- Summary and final comments

# FCC-hh

- 400 MHz single-cell cavity
  - LHC-type (Nb/Cu @ 4.5K)
  - possibly same as FCC-ee Z
- 48 MV total RF voltage per beam
  - 24 cavities/beam with 2 MV/cavity or 48 with 1 MV/cav.

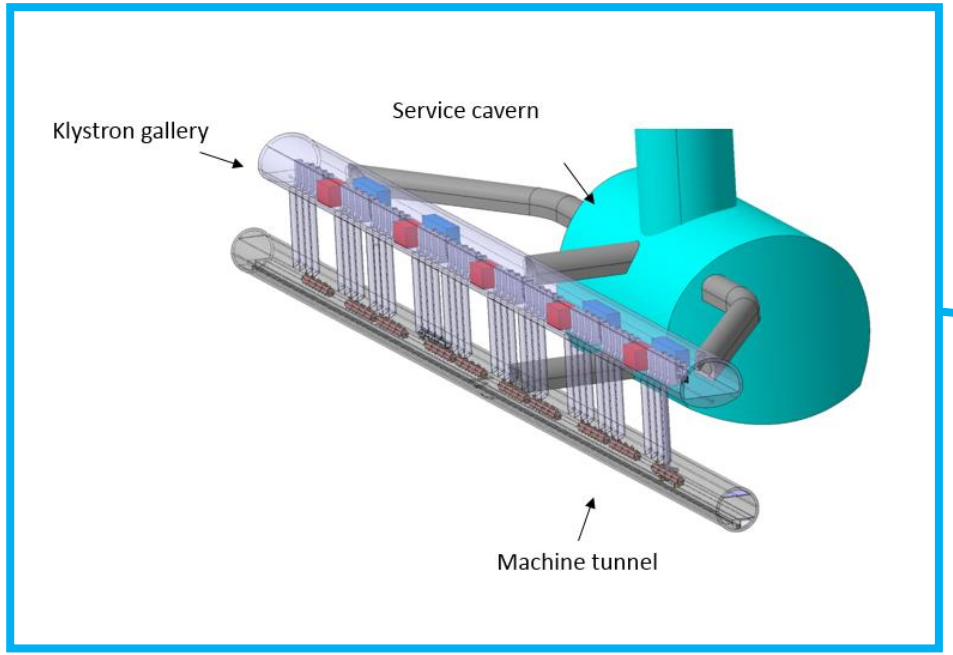


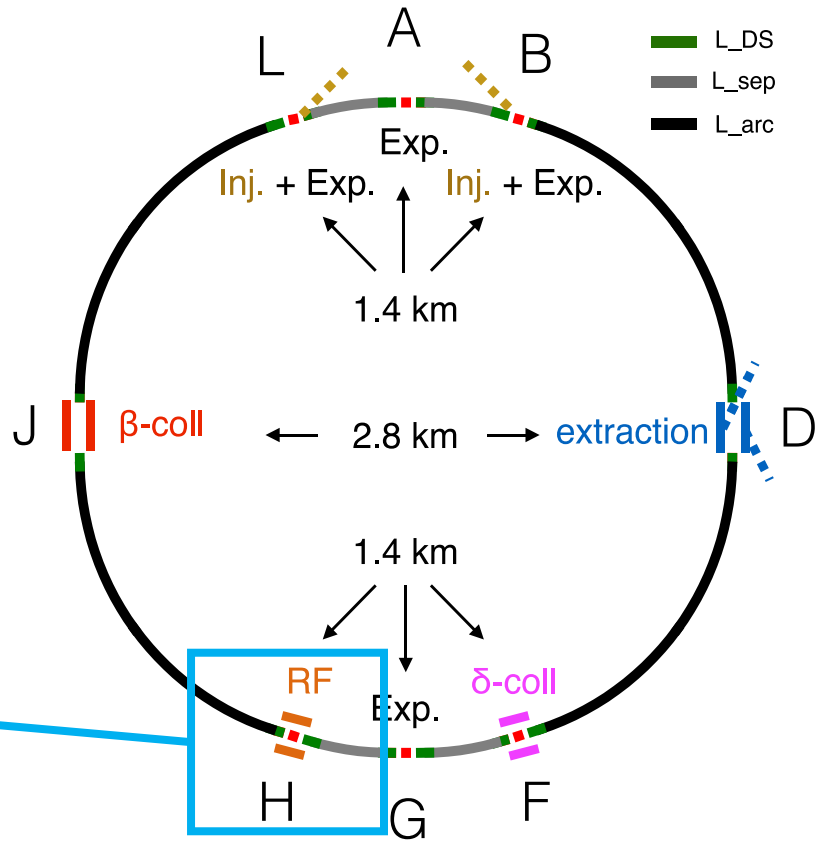

# FCC-hh

- Voltage requirements defined by:
  - Filling factor of the RF bucket (0.9/0.8 in ramp/physics)
  - Longitudinal emittance sufficiently large to prevent TMCI
- Final RF power requirements depend on:
  - total voltage V and power loss (SR)
  - acceleration rate (optimisation of voltage program)
  - number of RF cavities (voltage/cavity: 1 - 2 MV)
  - coupling $Q_L$

Ivan Karpov, *Longitudinal dynamics and RF requirements,* Thursday FCC-hh session

# FCC-ee

- 2 RF sections
  - Each 2.8 km length
  - symmetric wrt IPs
- Number and type of cavities evolves with FCC-ee program

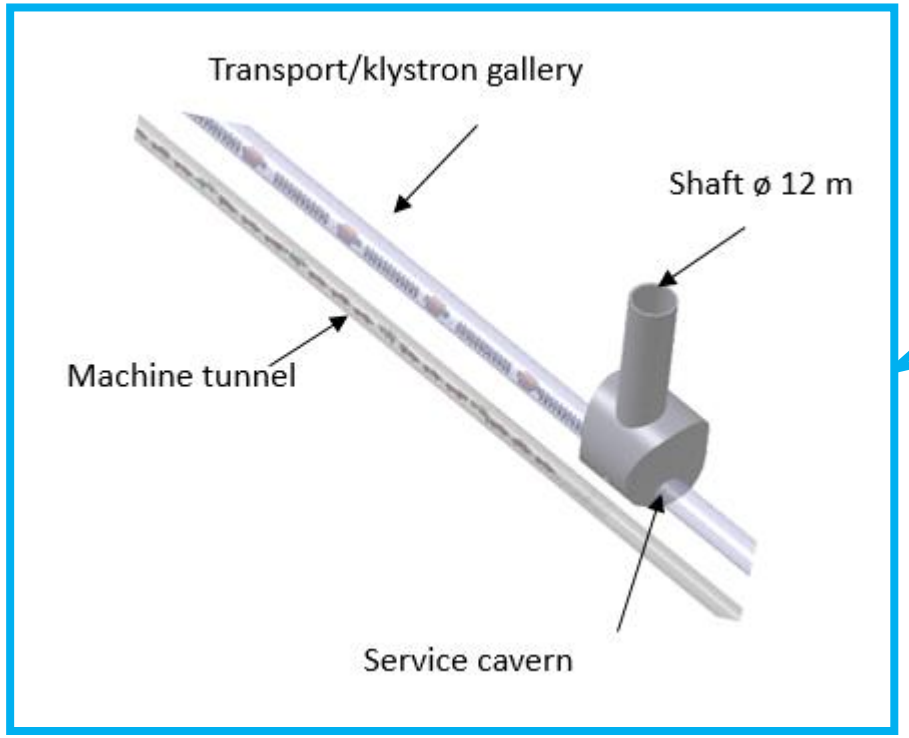


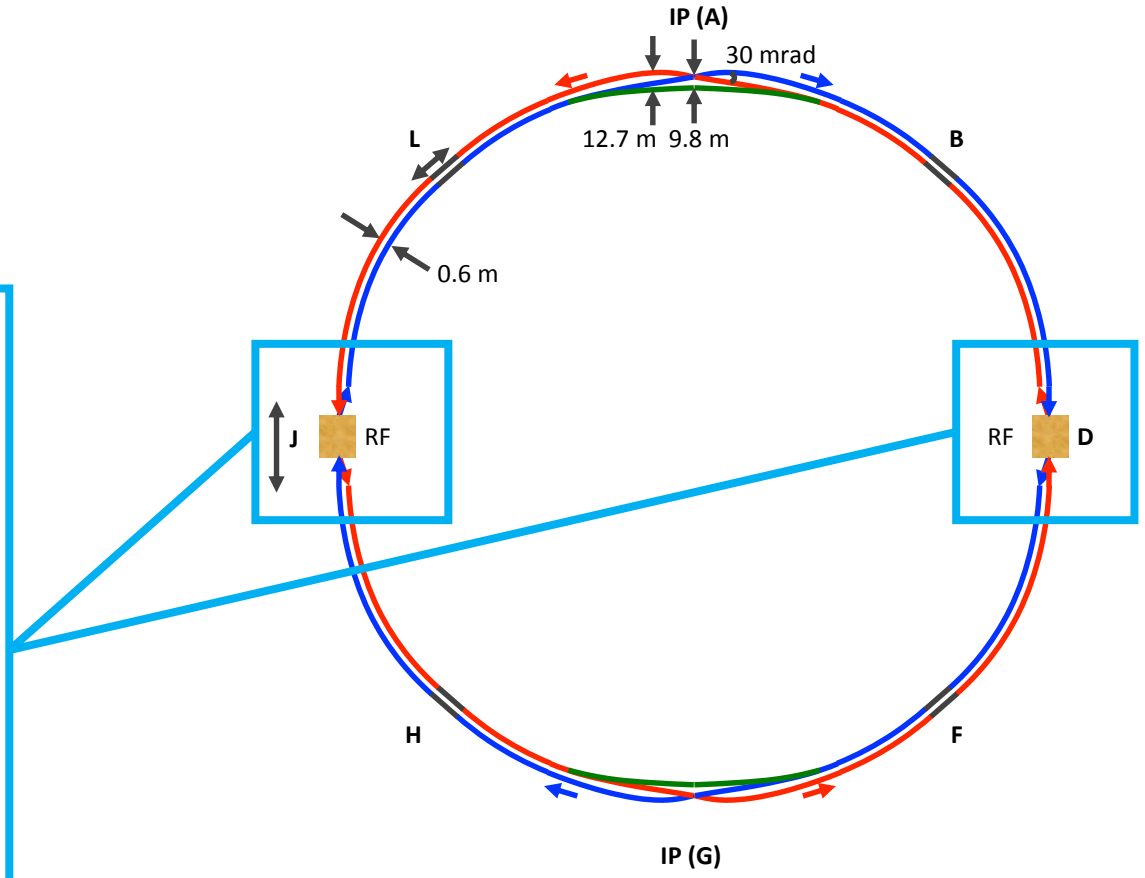

# FCC-ee RF operating modes

| Parameter | Z | W | H | $t\bar{t}_1$ | $t\bar{t}_2$ |
|---|---|---|---|---|---|
| Beam Energy [GeV] | 45.6 | 80 | 120 | 175 | 182.5 |
| Beam current [mA] | 1390 | 147 | 29 | 6.4 | 5.4 |
| Number of bunches | 16640 | 2000 | 328 | 59 | 48 |
| Bunch length (SR / BS) [mm] | 3.5 / 12.1 | 3.3 / 7.65 | 3.15 / 4.9 | | 2.5 / 3.3 |
| Beam RF voltage [MV] | 100 | 750 | 2000 | 9500 | 10930 |
| Runtime [year] | 4 | 1 | 3 | 1 | 3 |

- All operation modes assume 50 MW/beam of SR power
- Extreme range of beam intensities and energies between Z and $t\bar{t}$ modes
- "One size fits all" RF system not possible
- Each operating mode is a different machine
- 3 types of cavity to cover different requirements
- Staged installation + removal of cavities throughout the FCC-ee program

# Cavities: Z machine

- Low RF voltage → not limited by gradient
- Highest beam intensity
  → Fundamental power couplers: max 1 MW CW per coupler (challenging)
- Strong HOM damping, low longitudinal loss factor
  → low frequency, large aperture, low number of cells per cavity

- Baseline FCC–ee Z: single cell 400 MHz "LHC-like" cryomodule
  - Nb/Cu @ 4.5K
  - 10 MV/m (5.1 MV/m in Z operation)
  - intended as baseline for further studies (impedance, HOM damping)
  - possible re-use for FCC-hh

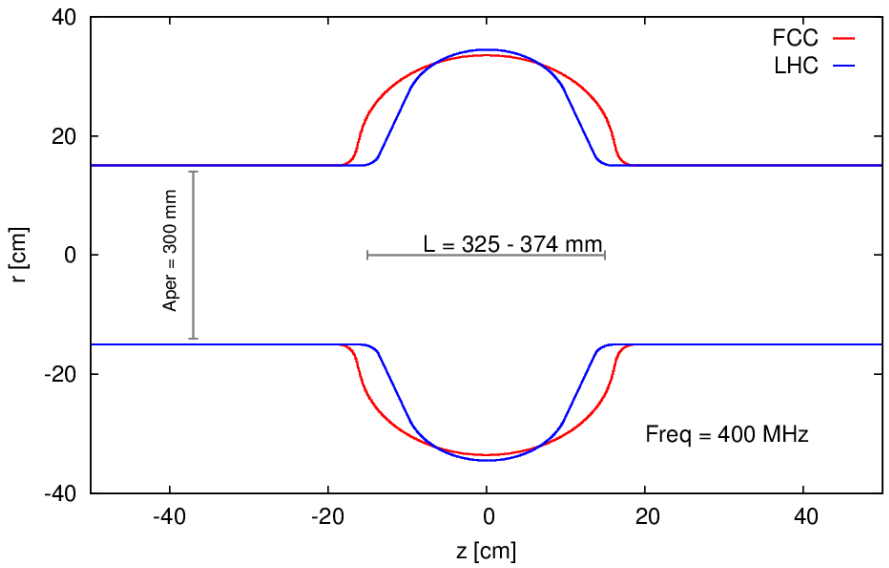


FCC 400MHz single-cell cavity

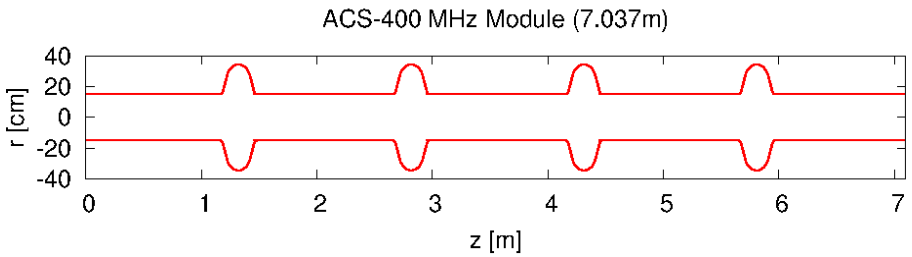


Inter-cell distance ~1m
End tapers (not shown) ~0.4 m

4-cavity cryomodule layout

Ivan Karpov, *Beam-cavity interaction challenges for FCC_ee cavities*

R. Calaga

# Cavities: $t\bar{t}$ machine

- Lowest beam intensity
  → Moderate fundamental and HOM powers
  - Modest power requirement per cavity → smaller RF power sources
- Highest RF voltage
  - Optimize: RF section length, cost, cryogenic power
- Material options:
  - Nb/Cu 400 MHz (10 MV/m) @ 4.5K
  - Bulk Nb 800 MHz (20 MV/m) @ 2K
  - With optimistic assumptions about long term Nb film cavity performance, the 2 options are roughly equivalent in overall cost and cryogenic power requirements

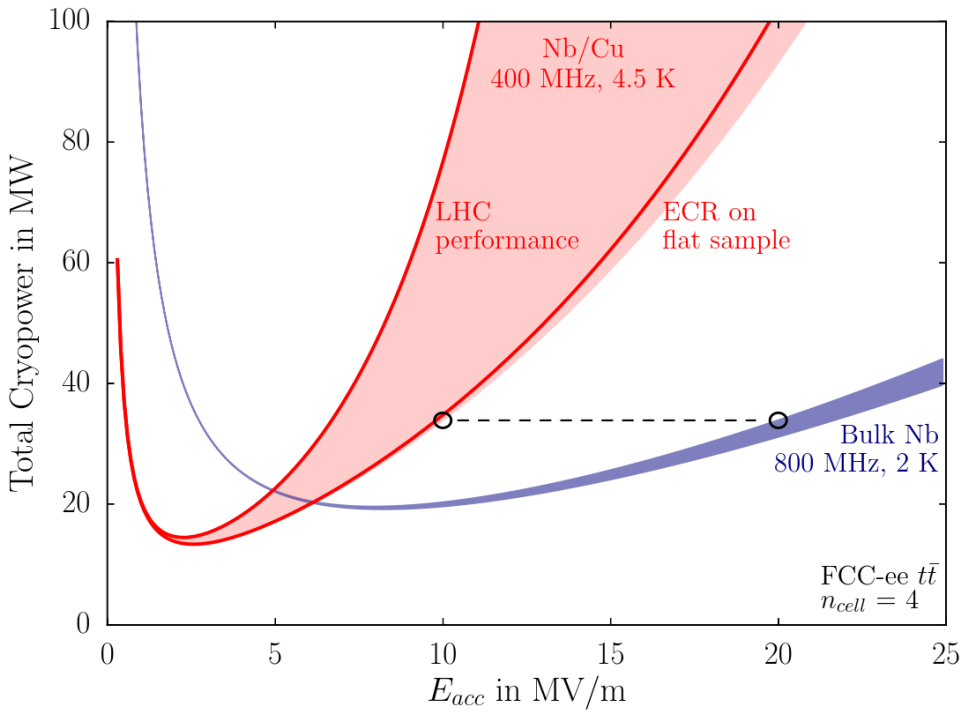


| | Nb/Cu | Bulk Nb |
|---|---|---|
| Number of cells per cavity | 4 | |
| Required cryogenic power | 34 MW | 32 MW |
| Frequency | 400 MHz | 800 MHz |
| Operating temperature | 4.5 K | 2 K |
| Accelerating gradient | 10 MV/m | 20 MV/m |
| Total number of cavities | 889 | |
| RF installation length | 1.9 km | 1.4 km |

Comparison of cavity material options for $t\bar{t}$

S. Aull

# Cavities: $t\bar{t}$ machine

- Baseline chosen for FCC–ee $t\bar{t}$ is 5-cell 800 MHz due to other advantages:
  - 5-cell cavity has ~20% better real-estate gradient
    → RF sections shorter by few 100m
  - Smaller waveguides: better for radiation shielding
  - More compact power sources
- But small decrease in luminosity (~7%)

- Detailed study and design of 4 and 5 cell cavities by S. Gorgi Zadeh (Uni. Rostock)

Shahnam Gorgi Zadeh, *Accelerating cavity and HOM coupler design study for the Higgs and top operation modes of FCC-ee*

4-cell 800 MHz cavity with HOM couplers and input coupler

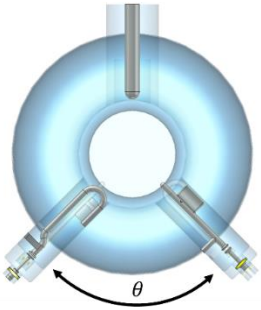


Side view of the HOM couplers

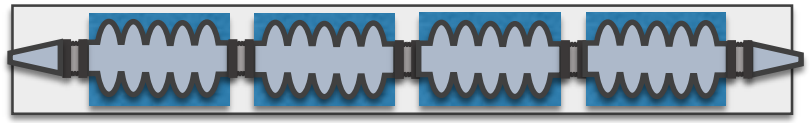

ESS-like CM @ 800MHz

# Cavities: W machine

- High RF voltage (4 times more than for Z)
  - → need to run close to maximum available gradient
  - → multi-cell cavities
- Moderately high beam intensity
  - → W machine still at the limit of fundamental power couplers
  - → Higher order mode power still an issue at W

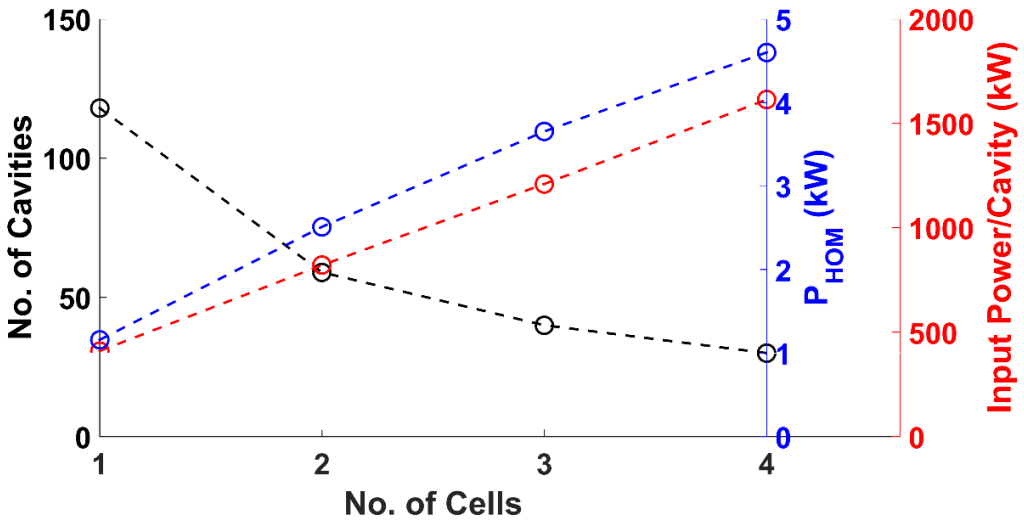


Number of cavities, HOM power and input power vs. number of cells per cavity ($E_{acc}$ = 10 MV/m @ 400 MHz, W beam parameters with SR bunch length )

- Baseline FCC–ee W: 4-cell 400 MHz "LEP-like" cavity
  - Nb film @ 4.5K, 10 MV/m
- Detailed study and design by S. Gorgi Zadeh (Uni. Rostock)

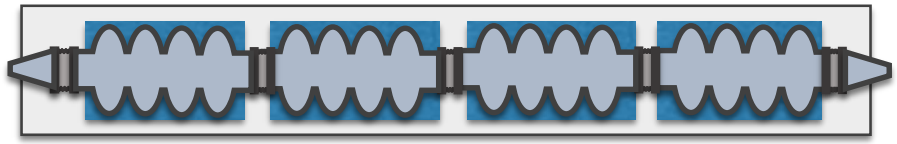

LEP-like CM @ 400MHz

Shahnam Gorgi Zadeh, *Accelerating cavity and HOM coupler design study for the Higgs and top operation modes of FCC-ee*

# Cavities: H machine

- Using the same arguments as for $t\bar{t}$ :
- Nb/Cu 400 MHz and bulk Nb 800 MHz options are roughly equivalent in cryogenic power consumption

- Baseline FCC–ee H: 4-cell 400 MHz Nb/Cu cavity as for W
- lower longitudinal loss factor, HOM power advantage
- re-use of 400 MHz RF power installation

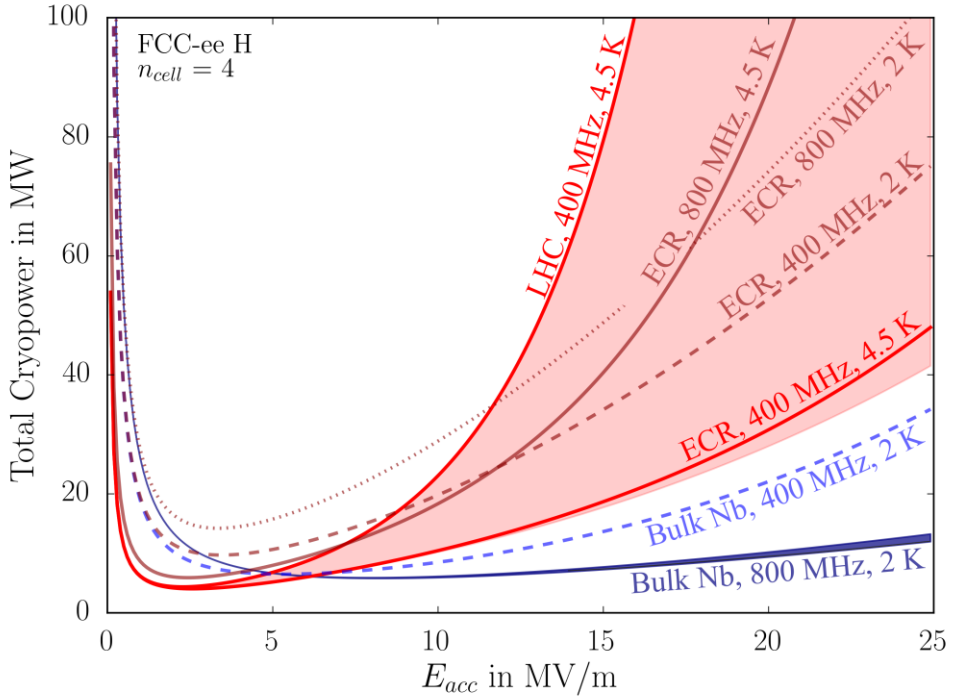


| | Nb/Cu | Bulk Nb |
|---|---|---|
| Number of cells per cavity | 4 | |
| Required cryogenic power | 10 MW | 9 MW |
| Frequency | 400 MHz | 800 MHz |
| Operating temperature | 4.5 K | 2 K |
| Accelerating gradient | 10 MV/m | 20 MV/m |
| Total number of cavities | 200 | |
| RF installation length | 500 m | 350 m |

S. Aull

# Booster ring

- Fast repetition rate booster for top-up injection at collision energy
- RF voltage approximately same as collider ring
- Low beam loading → can use multi-cell cavities at all energies
- In order to optimize the cryogenic system and distribution, it is proposed to use the same technology at each stage as for the collider-ring itself
  - 4-cell 400 MHz Nb/Cu @ 4.5K and 5-cell 800 MHz Nb @ 2K
- Modest beam current and duty cycle (~10%) offers the possibility to use compact RF power systems

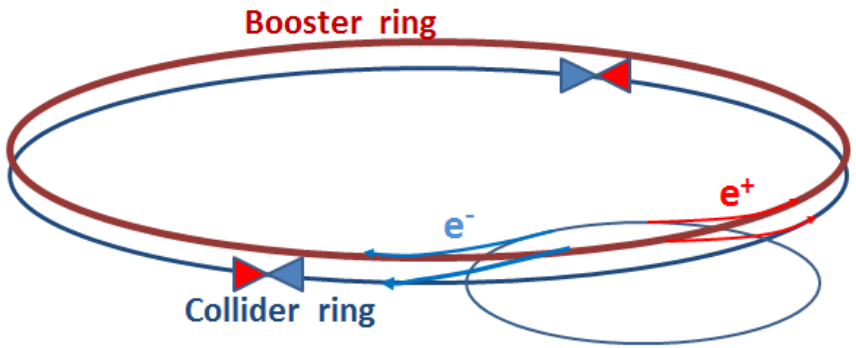

# RF system staging
## CDR baseline

400 MHz cavities

800 MHz cavities

| | Z | | W | | H | | $t\bar{t}_1$ | | $t\bar{t}_2$ | |
|---|---|---|---|---|---|---|---|---|---|---|
| | per beam | booster | per beam | booster | per beam | booster | 2 beams | booster | 2 beams | booster |
| Total RF voltage [MV] | 100 | 36 | 750 | 750 | 2000 | 1720 | 9500 | 7800 | 10930 | 9210 |
| **frequency [MHz]** | **400** | | | | | | | | | |
| RF voltage [MV] | 100 | 36 | 750 | 750 | 2000 | 1720 | 4000 | 1720 | 4000 | 1720 |
| $E_{acc}$ [MV/m] | 5.1 | 6 | 9.6 | 9.6 | 9.8 | 9.9 | 10 | | 10 | |
| # cell / cav | 1 | 4 | 4 | | 4 | | 4 | | 4 | |
| $V_{cavity}$ [MV] | 1.92 | 9 | 14.4 | 14.4 | 14.7 | 14.8 | 15 | | 15 | |
| # cavities | 52 | 4 | 52 | 52 | 136 | 116 | 272 | 116 | 272 | 116 |
| # CM | 13 | 1 | 13 | 13 | 34 | 29 | 34 | 29 | 68 | 29 |
| T operation [K] | 4.5 | | 4.5 | | 4.5 | | 4.5 | | 4.5 | |
| dyn losses/cav [W]* | 14 | 11 | 210 | 26 | 202 | 29 | 210 | 30 | 210 | 30 |
| stat losses/cav [W] | 8 | | 8 | | 8 | | 8 | | 8 | |
| $Q_{ext}$ | $4.4\ 10^4$ | | $6.6\ 10^5$ | | $1.9\ 10^6$ | | $4.0\ 10^6$ | | $4.7\ 10^6$ | |
| $P_{cav}$ [kW] ** | 962 | 125 | 1000 | 21 | 368 | 4.5 | 21 | | 21 | |
| # RF source | 52 | | 52 | | 136 | | 272 | | 272 | |
| | | | | | | | | | | |
| **frequency [MHz]** | **800** | | | | | | | | | |
| RF voltage [MV] | | | | | | | 5500 | 6080 | 7000 | 7580 |
| $E_{acc}$ [MV/m] | | | | | | | 19.8 | 19.8 | 19.8 | 19.8 |
| # cell / cav | | | | | | | 5 | | 5 | |
| $V_{cavity}$ [MV] | | | | | | | 18.6 | 18.6 | 18.6 | 18.6 |
| # cavities | | | | | | | 296 | 328 | 376 | 408 |
| # CM | | | | | | | 74 | 82 | 94 | 102 |
| T operation [K] | | | | | | | 2 | | 2 | |
| Q dyn/cav [W]* | | | | | | | 66 | 10 | 66 | 10 |
| Q stat [W] | | | | | | | 8 | | 8 | |
| $Q_{ext}$ | | | | | | | $7.9\ 10^6$ | | $7.9\ 10^6$ | |
| # RF source | | | | | | | 296 | | 376 | |
| $P_{cav}$ [kW] ** | | | | | | | 88 | 1.6 | 88 | 1.6 |
| | | | | | | | | | | |

# RF system staging: Z → W → H

**Z:**

- 52 single-cell 400 MHz cavities per beam
  - total 26 cryomodules
- 1 cryomodule (4 x 4-cell cavities) in booster

**W:**

- All 26 CM are replaced by 4-cell cavity cryomodules
  - RF power plant unmodified
- 12 additional cryomodules in booster

**H:**

- 42 additional 400 MHz cryomodules installed
- Existing RF power units are split and moved to power new cryomodules
- 14 additional cryomodules in booster

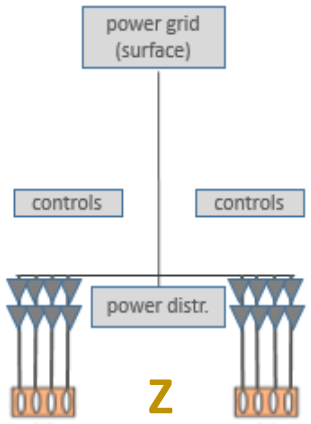


single cell 400 MHz

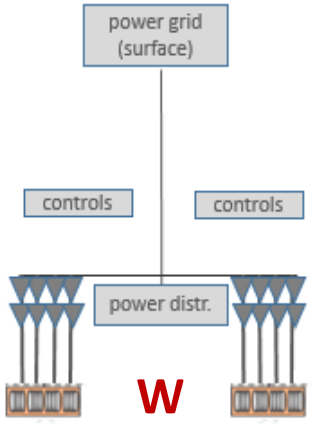


four cell 400 MHz

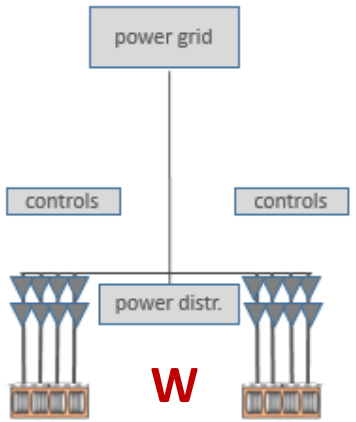


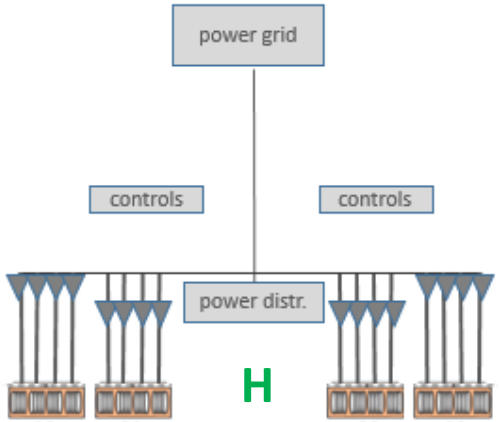

# RF system staging : H → $t\bar{t}$

- Small number of bunches
  - arrange filling pattern so no bunches collide in RF sections
- Rearrange existing RF system to share it between the two beams
  - doubles the RF voltage available for each beam
  - beam crossing removed, separators installed at the entrance and exit of each RF straight section

**$t\bar{t}$1:** (long shutdown)

- 74 new 800 MHz cryomodules (4 x 5-cell) installed
- 82 new 800 MHz cryomodules in booster
  - may be installed earlier

**$t\bar{t}$2:**

- 20 additional 800 MHz cryomodules installed
- 20 additional 800 MHz cryomodules in booster

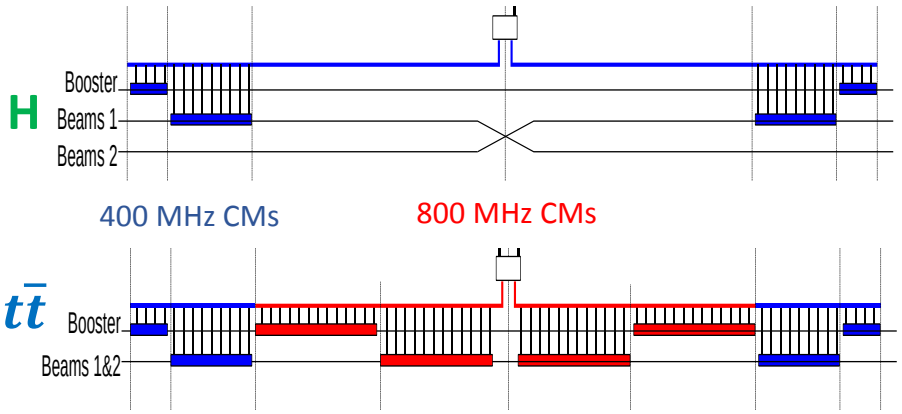


L. Tavian

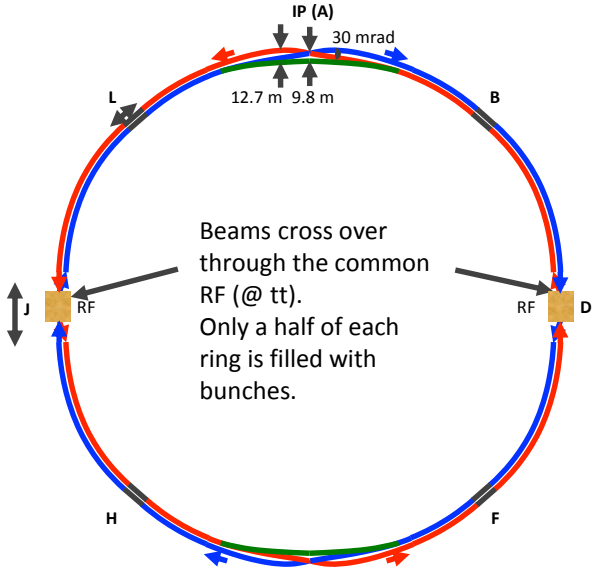


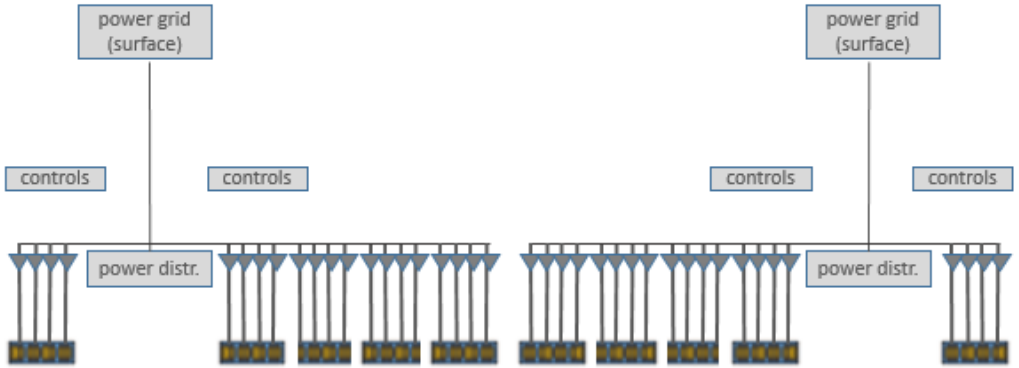

# FCC-ee vs LEP2

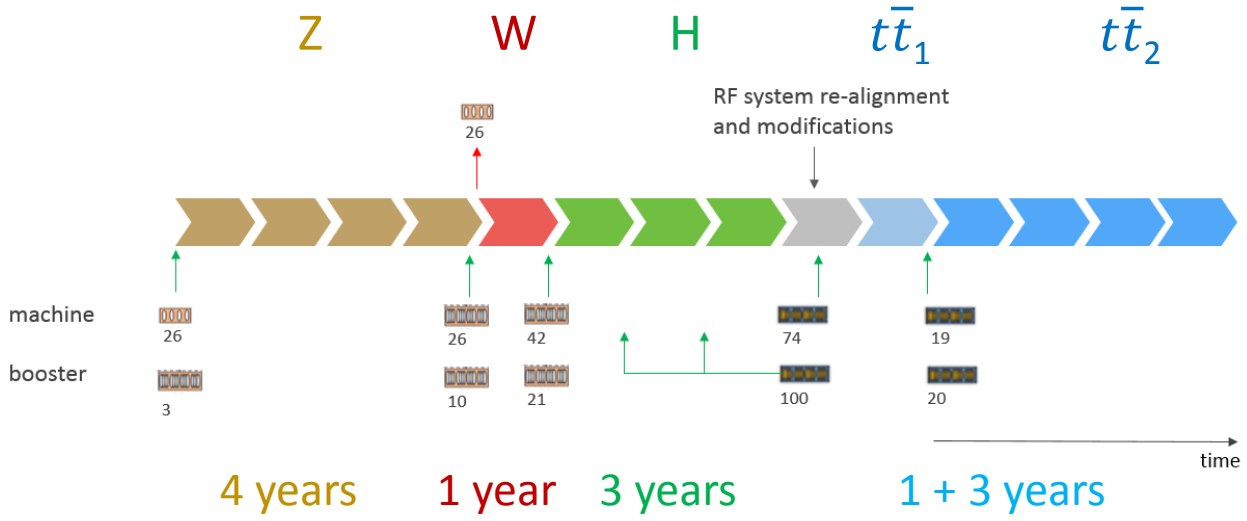


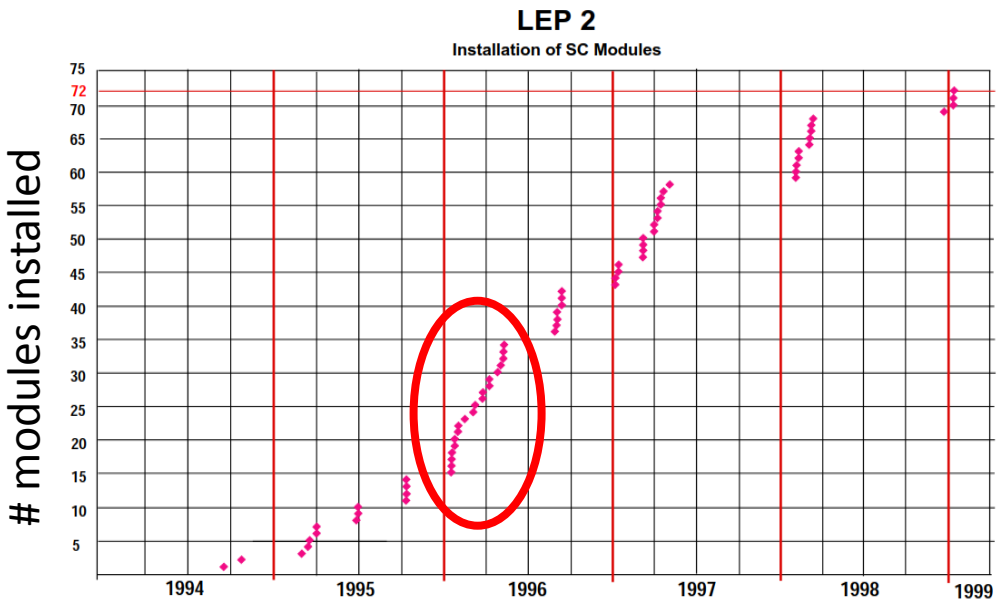


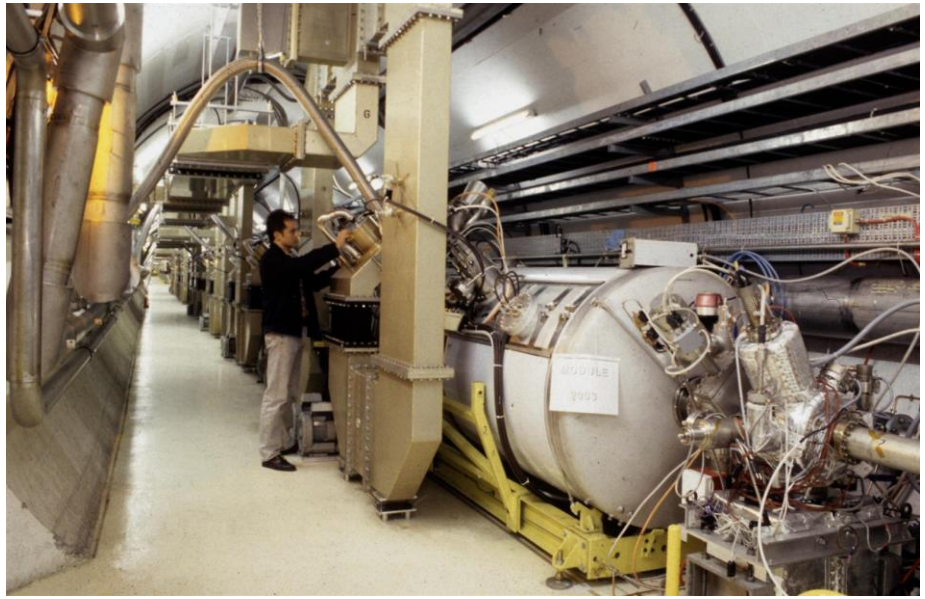

- LEP2: 20 cryomodules installed during winter shutdown 1996
- FCC-ee: between 2 and 3 times as many to install during each winter shutdown

# Summary

- A baseline scenario has been prepared for gradual evolution of the FCC-ee complex
  - step-wise expansion and reconfiguration of the superconducting RF system
  - matches the latest FCC-ee parameters and timeline
- A series of cavity designs comprising single-cell and 4-cell 400 MHz and 5-cell 800 MHz is being developed to cover the different operation energies
- Use of a 400 MHz RF system for the Z, W, H and FCC-hh maximizes the re-use of the existing hardware
- A hybrid 400/800 MHz system offers the best perspectives for the highest energy $t\bar{t}$ machine
  - cost, diversity of technology and integration constraints
- Each of the transitions between stages requires extensive installation work to be carried out in a very short time frame
  - feasible, but management and organization of the workload remains a major challenge

Thank you for your attention

# FCC-ee parameters (4 machines)

| Parameter | Z | W | H | ttbar |
|---|---|---|---|---|
| beam energy [GeV | 45.6 | 80 | 120 | 182.5 |
| momentum compaction [$10^{-5}$] | 1.48 | 0.73 | 0.73 | 0.73 |
| horizontal emittance [nm] | 0.27 | 0.28 | 0.63 | 1.45 |
| synchrotron tune | 0.0125 | 0.0115 | 0.018 | 0.035 |
| longitudinal damping time [ms] | 414 | 77 | 23 | 6.6 |
| SR energy loss / turn [GeV] | 0.036 | 0.34 | 1.72 | 9.21 |
| total RF voltage [GV] | 0.1 | 0.44 | 2 | 10.93 |
| RF acceptance [%] | 1.9 | 1.9 | 2.3 | 4.9 |
| energy acceptance [%] | 1.3 | 1.3 | 1.5 | 2.5 |
| energy spread (SR / BS) [%] | 0.038/0.132 | 0.066/0.153 | 0.099/0.151 | 0.15/0.20 |
| bunch length (SR / BS) [mm] | 3.5/12.1 | 3.3/7.65 | 3.15/4.9 | 2.5/3.3 |
| bunch intensity [$10^{11}$] | 1.7 | 1.5 | 1.5 | 2.8 |
| no. of bunches / beam | 16640 | 2000 | 393 | 39 |
| beam current [mA] | 1390 | 147 | 29 | 5.4 |

4 years 1 year 3 years 1 + 3 years