YNU Initiative for Global Arts & Sciences
YOKOHAMA National University

13th European Conference on Applied Superconductivity,
Geneva, 17-21 September 2017

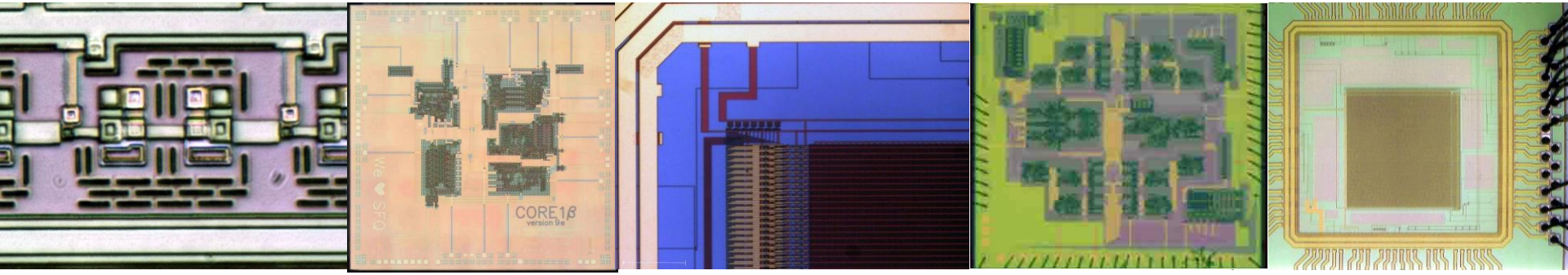

Recent research developments of adiabatic quantum-flux-parametron circuits technology toward energy-efficient high-performance computing

N. Yoshikawa[1,2], N. Takeuchi[2], C.L. Ayala[2], Q. Xu[2], K. Fang[1], N. Tsuji[1], F. China[1], Y. Murai[1], T. Ortlepp[2,3], Y. Yamanashi[1,2]

[1]Department of Electrical and Computer Engineering, Yokohama National University, Japan

[2]Institute of Advanced Sciences, Yokohama National University, Japan

[3]The CiS Research Institute for Microsensor Systems GmbH, Germany

EUCAS 2017

The circuit was fabricated using ISTEC standard process (STP2). National Institute of Advanced Industrial Science and Technology partially contributed to the circuit fabrication.

Institute of Advanced Sciences
Yokohama National University

Outline

- Background and motivation
- Operation principle of adiabatic quantum flux parametron (AQFP)
- AQFP as an energy-efficient logic circuit
  - Evaluation of AQFP as a logic circuit
- Design methodology of AQFP logic circuits
- EDA tools for Top-Down design
- Summary

Background

Estimated power consumption to realize an exa-scale computer

> 100 MW
~ $million/100 MW per year

K computer (Japan)

Peak performance: 10.5 PFLOPS
Power consumption: 12.6 MW

1st-ranked computers in recent TOP500

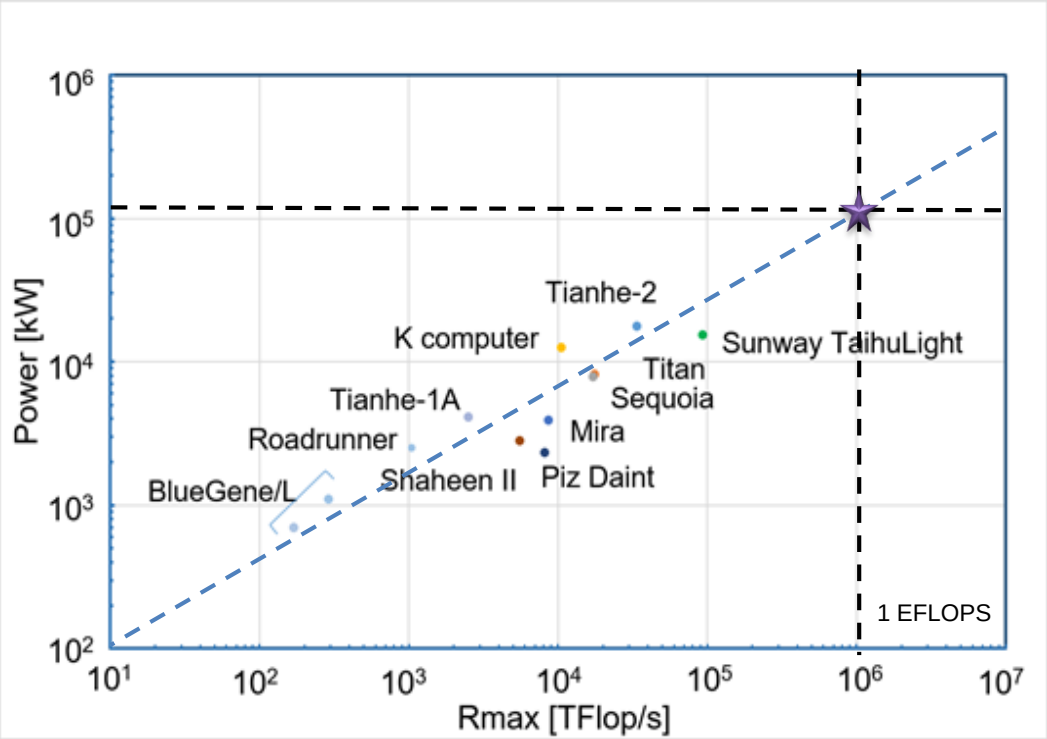

http://www.top500.org/

Low-Power Logic Devices is highly demanded.

Energy-Efficient SFQ Circuits

DC Powered

ERSFQ (Hypres)

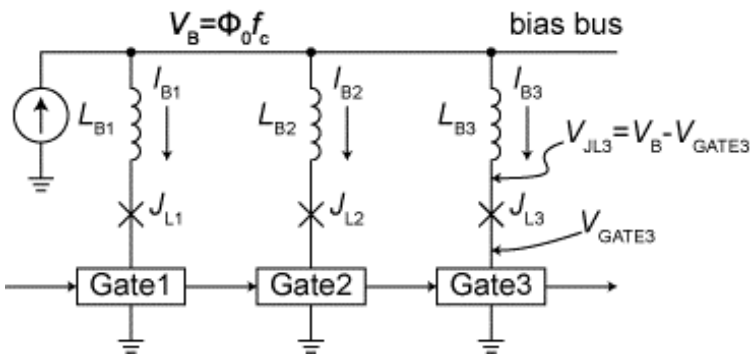

$P_S \sim P_D \sim I_c\Phi_0 f$

O. A. Mukhanov, *IEEE Trans. Appl. Supercond.* **21**, 760 (2011).

AC Powered

RQL (Northrop Grumman)

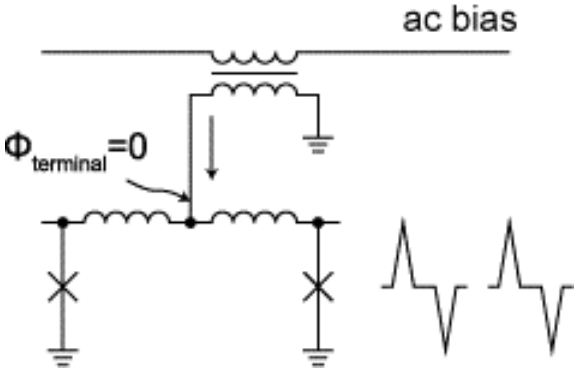

$P_S \sim 0,\ P_D \sim I_c\Phi_0 f$

Q. P. Herr *et al.*, *J. Appl. Phys.* **109**, 103903 (2011).

LV-SFQ (Nagoya Univ.)

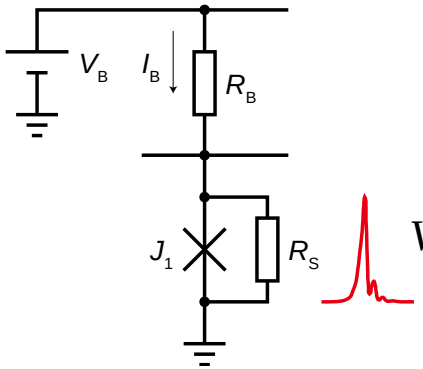

$P_S \sim 5P_D,\ P_D \sim I_c\Phi_0 f$

$$V=\frac{\Phi_0}{2\pi}\frac{d\varphi}{dt}$$

M. Tanaka *et al*. *JJAP* **5** 1053102 (2012)

AQFP (Yokohama National Univ.)

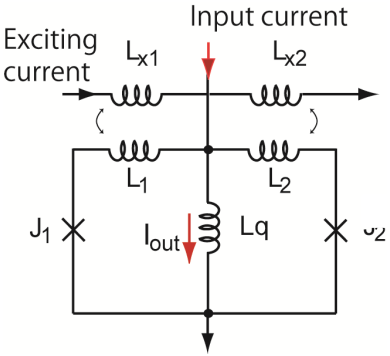

$P_S \sim 0,\ P_D < I_c\Phi_0 f$

N. Takeuchi, *et. al.*, *SUST*, 26, 035010 (2013).

YNU YOKOHAMA National University

Comparison of Energy-Delay Product

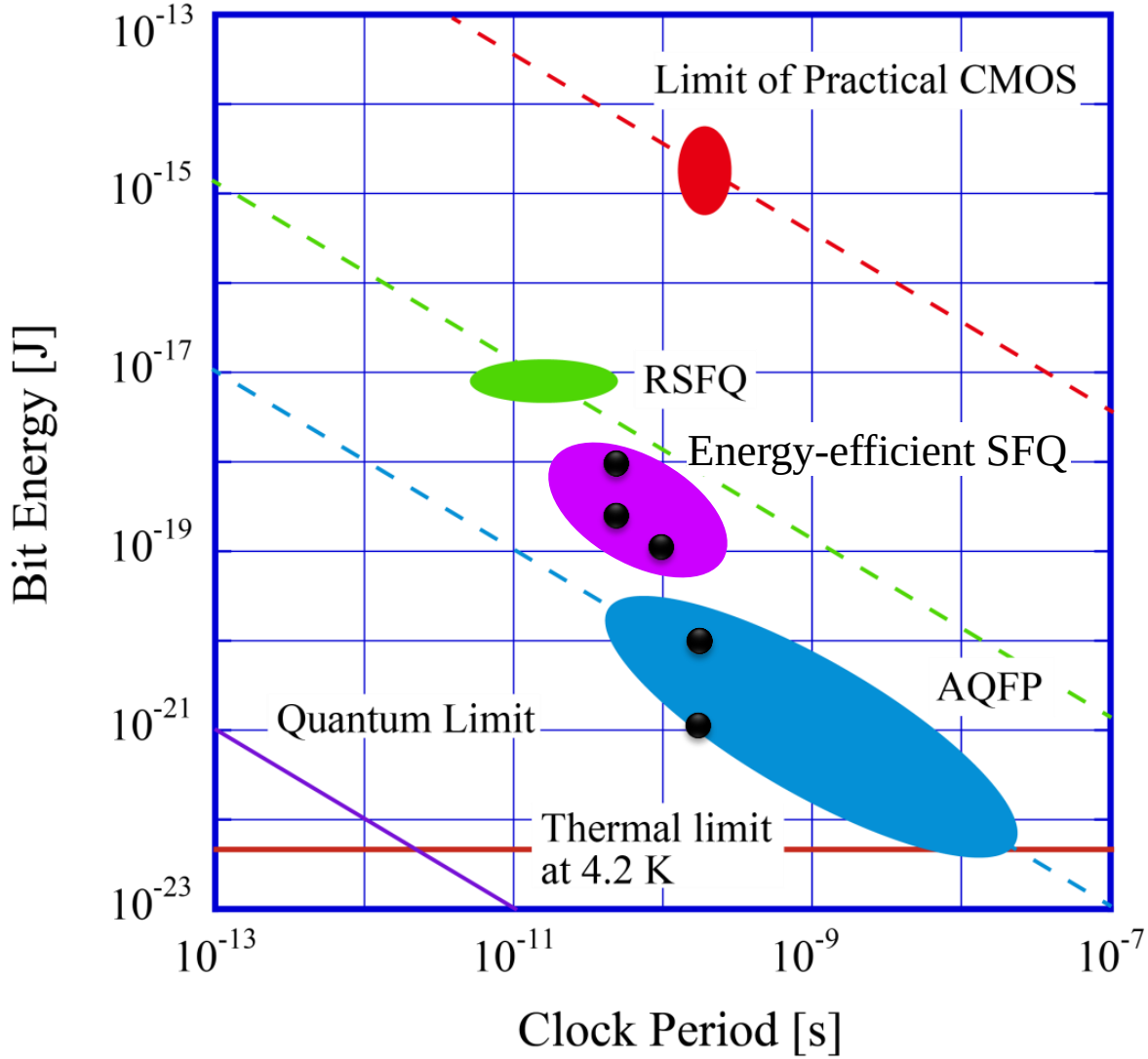

Adiabatic Quantum-Flux-Parametron (AQFP)

AQFP gate

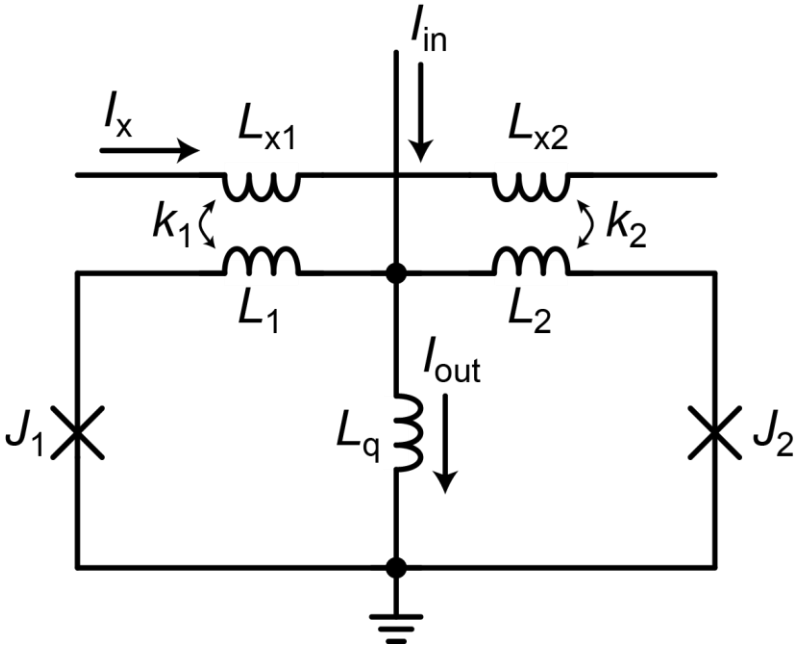

An SFQ is stored in the right or left loop depending on I_{in}.

Potential energy of the gate

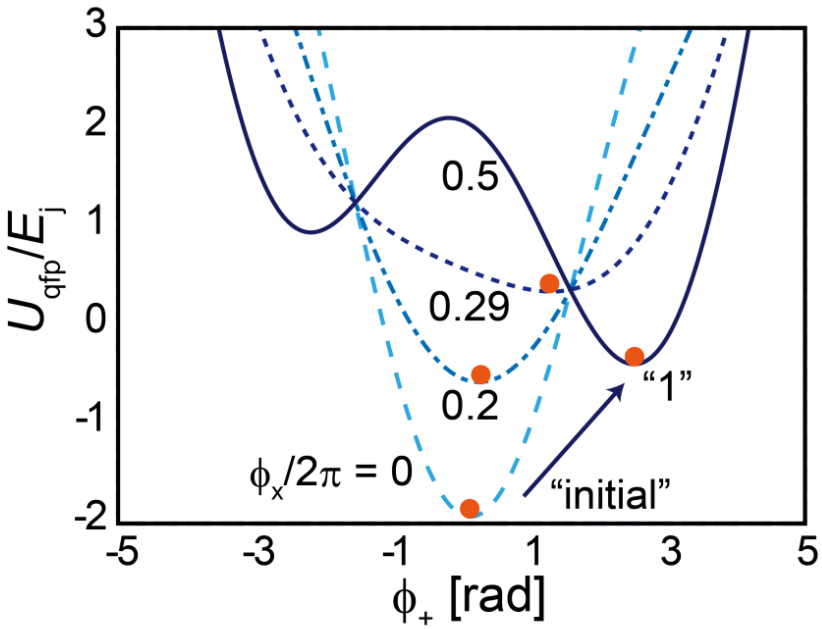

Potential energy changes adiabatically during switching.

Operation principle is based on QFP gates.

M. Hosoya et al., *IEEE Trans. Appl. Supercond*. 1, 77–89 (1991).

Adiabatic Quantum-Flux-Parametron (AQFP)

AQFP gate

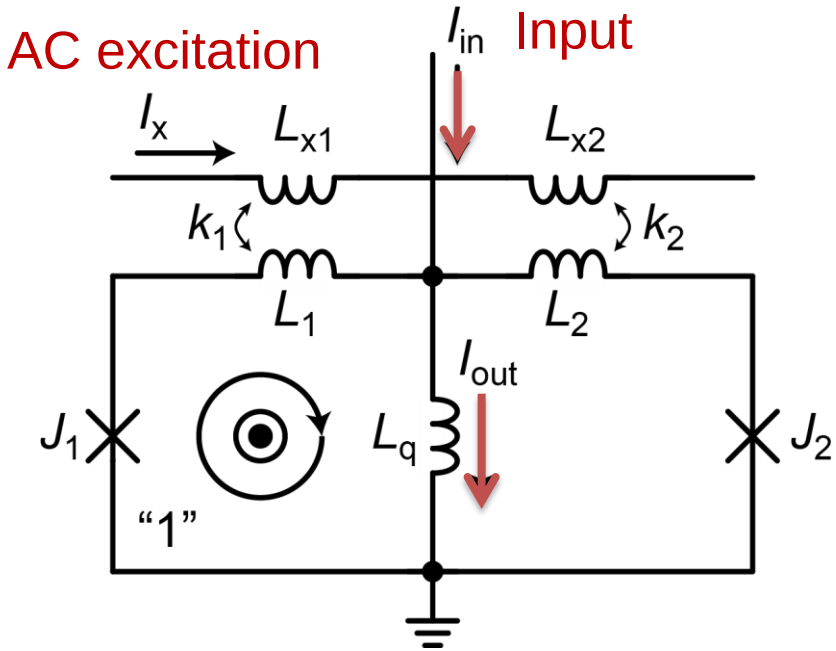

I_{out} flows downward.

Potential energy of the gate

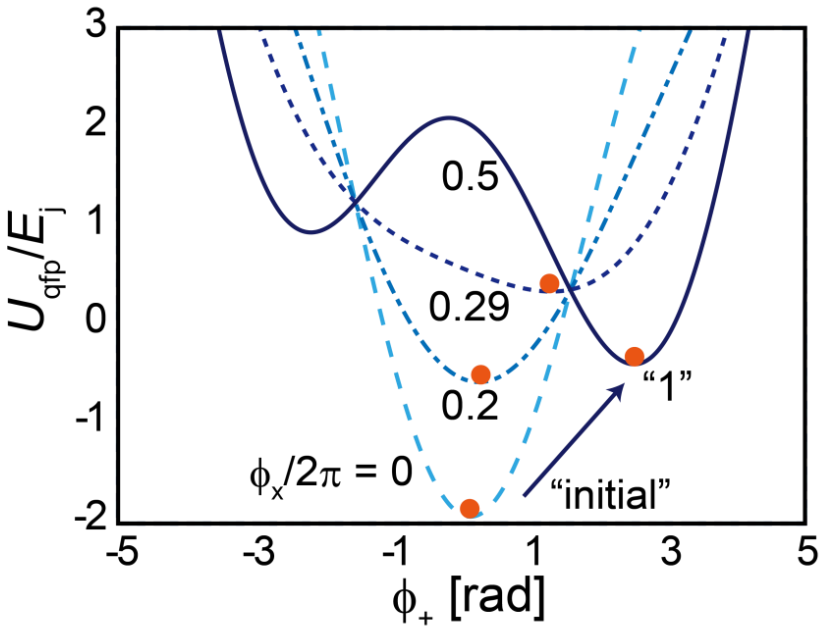

Potential energy changes adiabatically during switching.

Operation principle is based on QFP gates.

M. Hosoya et al., *IEEE Trans. Appl. Supercond*. 1, 77–89 (1991).

Adiabatic Quantum-Flux-Parametron (AQFP)

AQFP gate

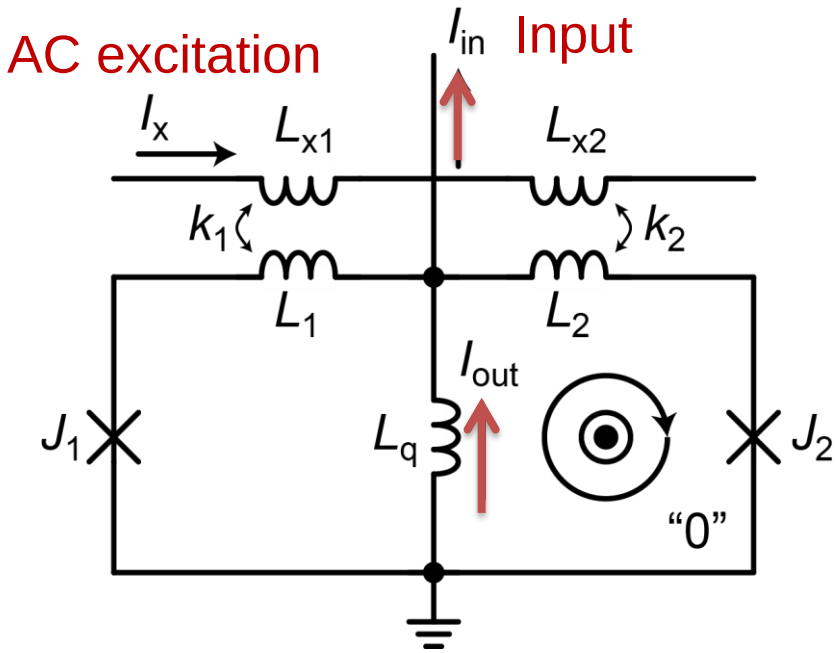

I_{out} flows upward.

Potential energy of the gate

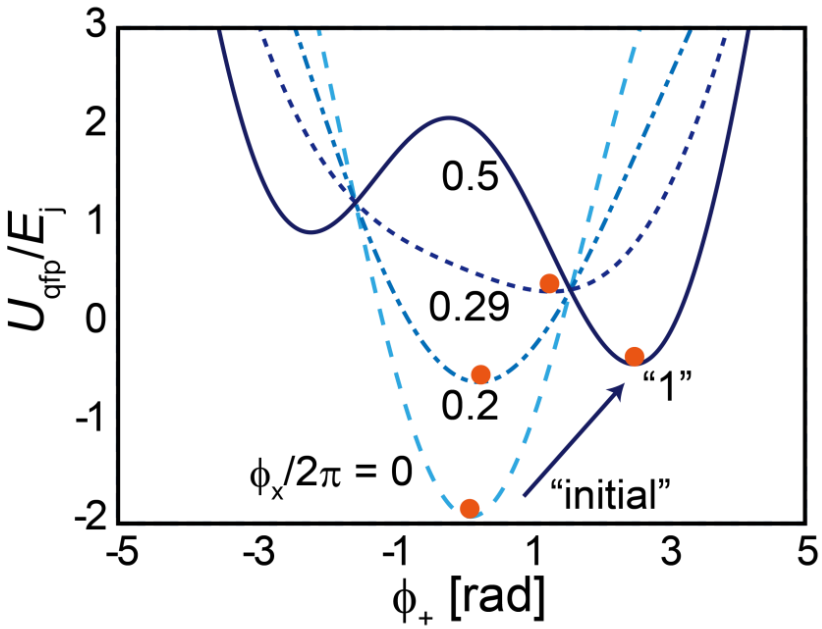

Potential energy changes adiabatically during switching.

Operation principle is based on QFP gates.

M. Hosoya et al., *IEEE Trans. Appl. Supercond.* 1, 77–89 (1991).

Evolution of Junction Phase at 4.2 K

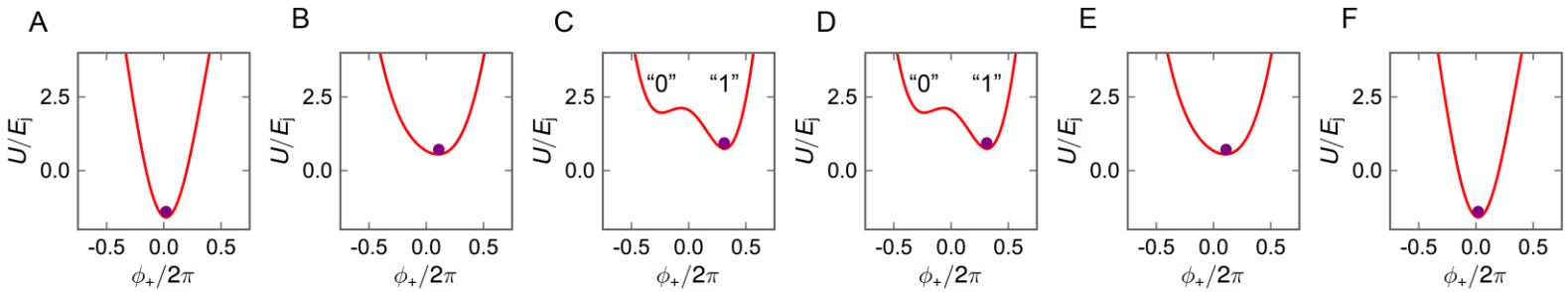

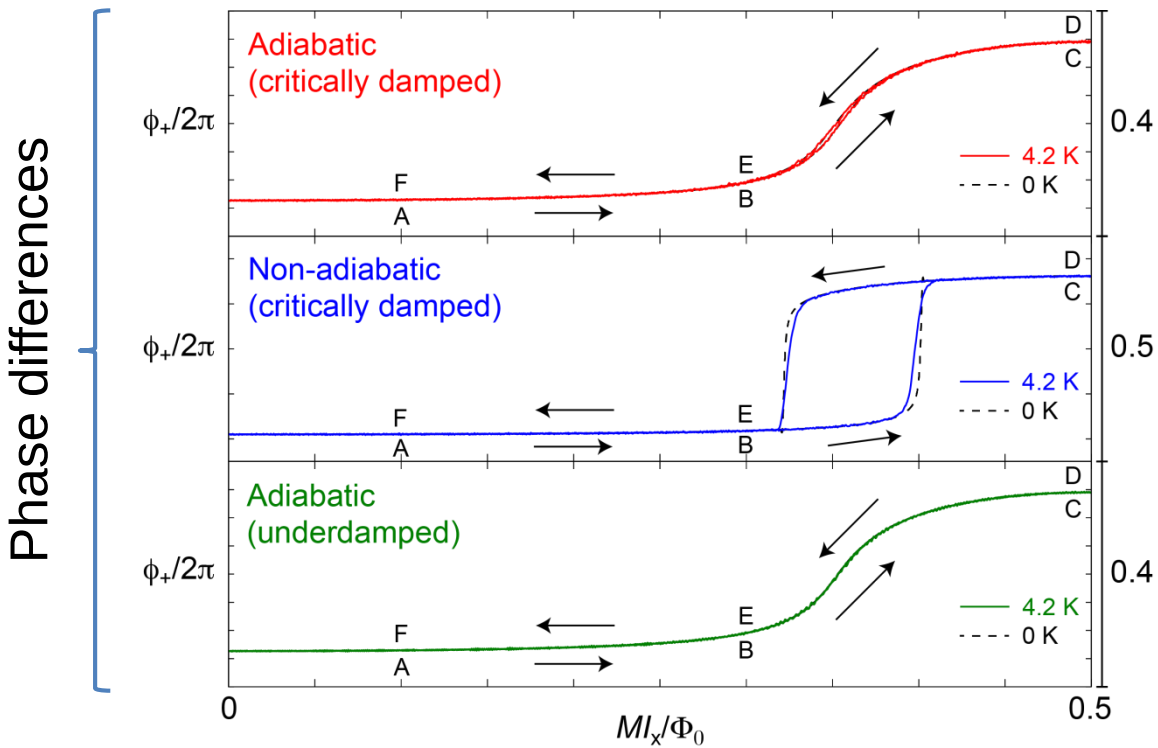

The phase of junctions in AQFP gates change adiabatically even at a finite temperature.

Bit Energy vs. Clock Period of AQFP

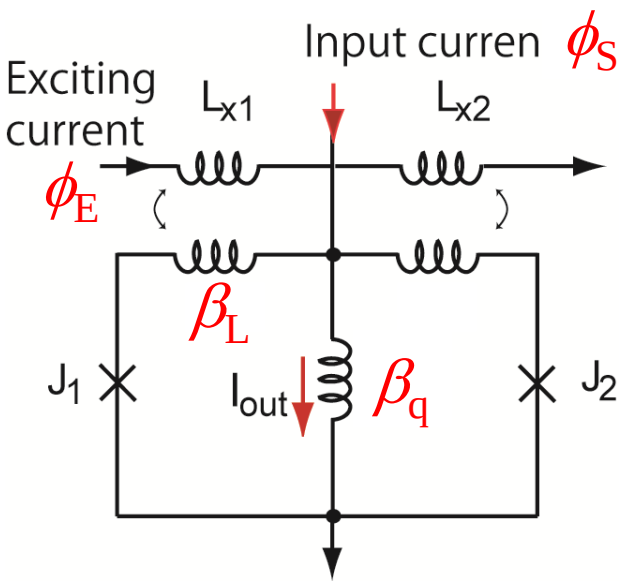

Energy dissipation $\propto f$

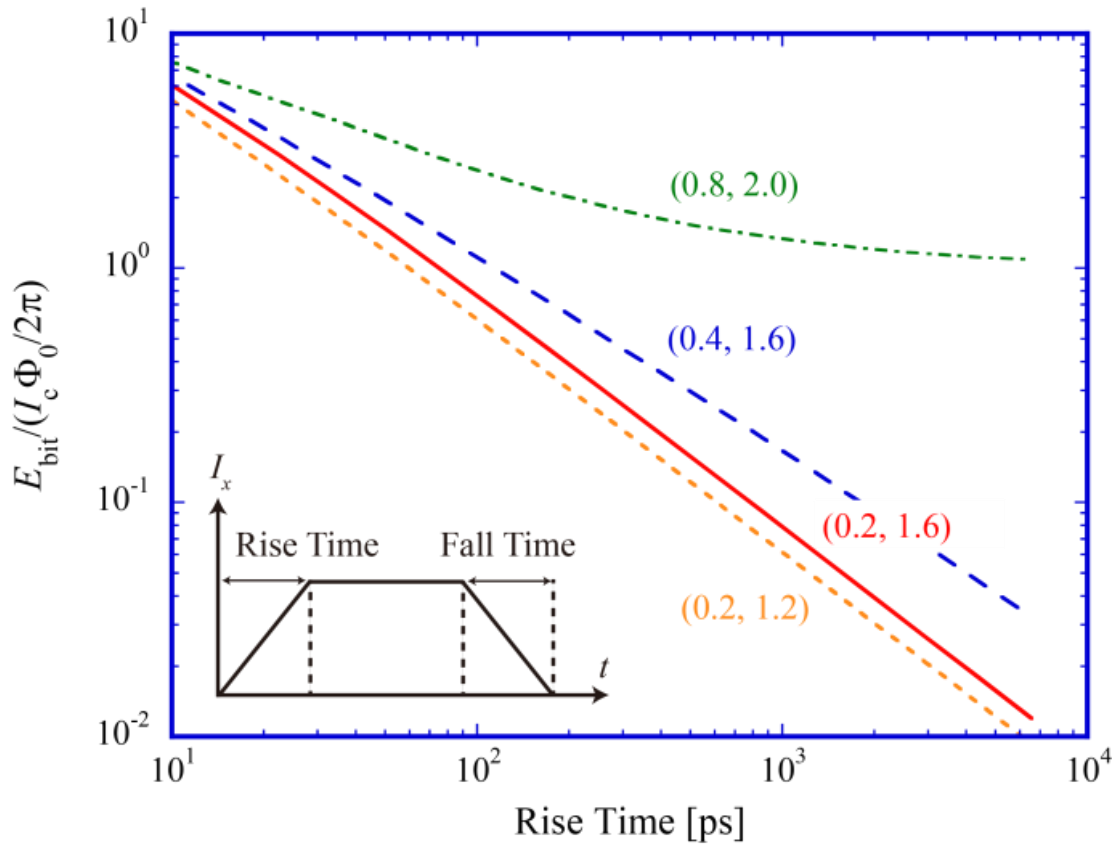

When rise time is 1000 ps, $E_{bit} = 0.023\, I_c\Phi_0$ (~ $20k_BT$).

→ 1/1000 of RSFQ

N. Takeuchi, *et. al.*, *SUST*, 26, 035010 (2013).

Bit Energy Measurement of AQFP using a Superconducting Resonator

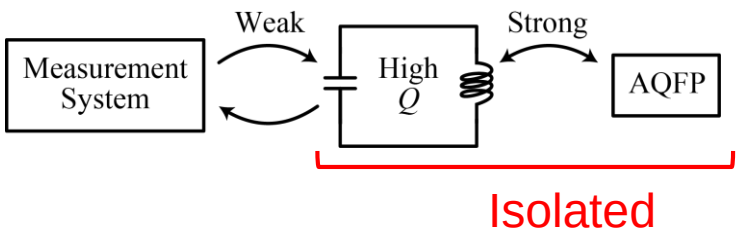

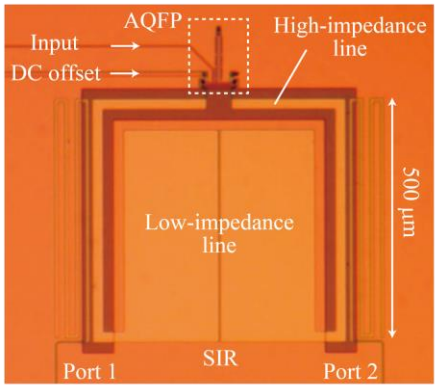

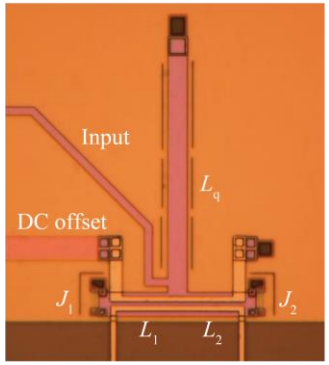

Closeup of the AQFP gate

Clock frequency: 4.998 GHz
Q of resonator : 357

Measured power consumption of AQFP

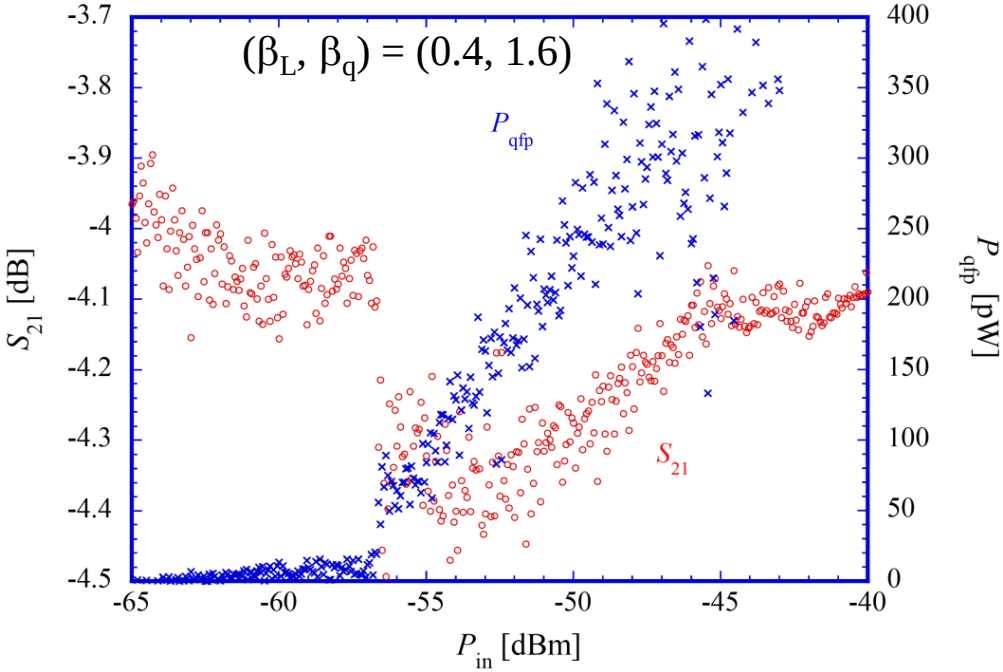

P_{qfp} ~ 50 pW

E_{bit} ~ 10 zJ ~ 170k_BT

AIST Nb Josephson standard process (STP2) was used.

N. Takeuchi, *et. al.*, *Appl. Phys. Lett.*, 102, 052602 (2013).

YNU YOKOHAMA National University

Comparison of Superconducting Logics

Logic	Clock Freq. [GHz]	$E_{bit} / I_c\Phi_0$	Typical I_c [mA]	EDP [aJ·ps]
CMOS	4	-	-	~10^5
RSFQ [1]	50	19	150	120
eSFQ [2]	20	0.8	150	12
RQL [3]	10	0.33	150	10
LV-RSFQ [4]	20	3.5	150	54
AQFP [5]	5	0.0083	50	0.086
Quantum limit	-	-	-	5.3×10^{-5}

[1] X. Peng et al., IEICE Trans. Electron. **E97.C**, 188 (2014).
[2] M. H. Volkmann et al., Supercond. Sci. Technol. **26**, 015002 (2013).
[3] Q. P. Herr et al., J. Appl. Phys. **109**, 103903 (2011).
[4] M. Tanaka et al., IEEE Trans. Appl. Supercond. **23**, 1701104 (2013).
[5] N. Takeuchi et al., Supercond. Sci. Technol. 28, 015003 (2015).

Evaluation of AQFP as a Logic Circuit

Important metrics as a logic circuit

- Gain
- Functionality
- Speed
- Energy consumption
- Driving ability
- Connectability
- Error rates
- Robustness
- Density

Gain

- Current gain of AQFP is considerably large.

Current gain vs. input current at T = 0K

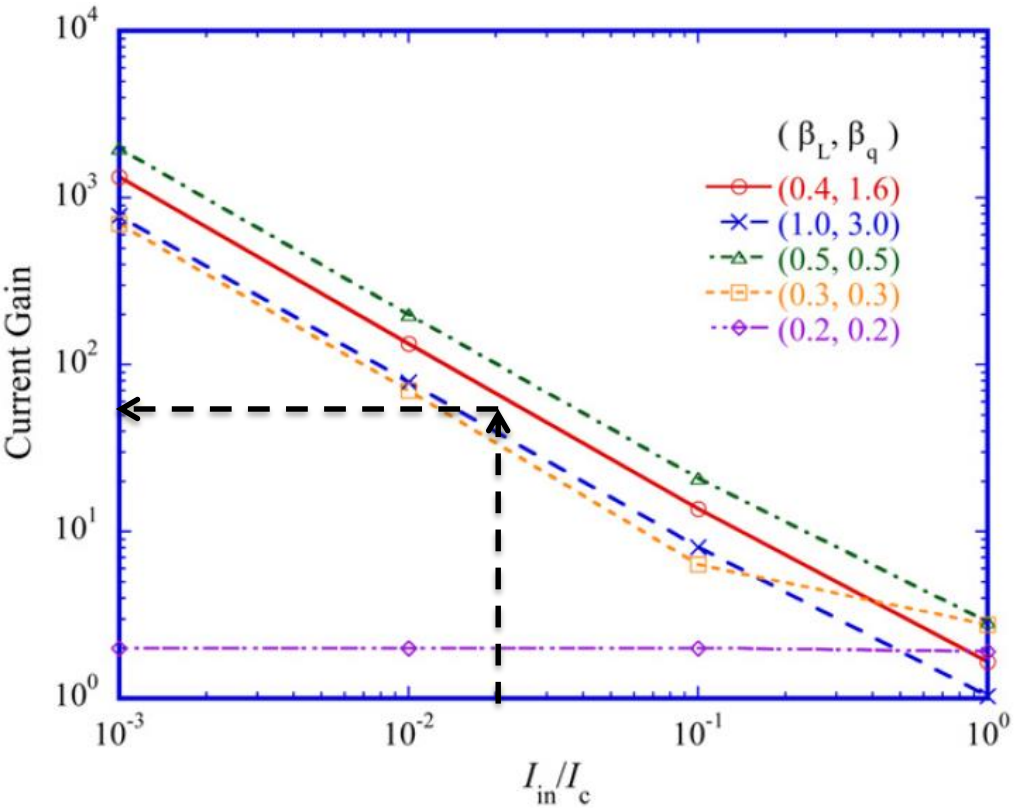

If we assume

δI_{in} ~ 1 μA, and I_c = 50 μA,

the current gain is given by

$I_c / \delta I_{in}$ ~ 50.

δI_{in}: input thermal noise

cf. In RSFQ circuits with

I_{in} ~ 20 μA, I_c = 100 μA,

the current gain is ~ 5.

N. Takeuchi, *et. al.*, *SUST*, 26, 035010 (2013).

Functionality

- NOT gate is cost free.
- Majority gate is a basic logic gate.

NOT gate is made by using a transformer with negative coupling.

Majority gate is made by connecting three buffer in parallel.

Buffer

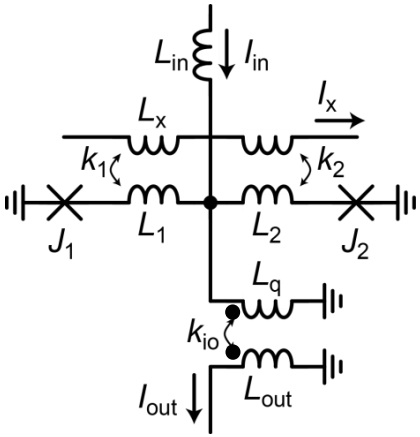

NOT

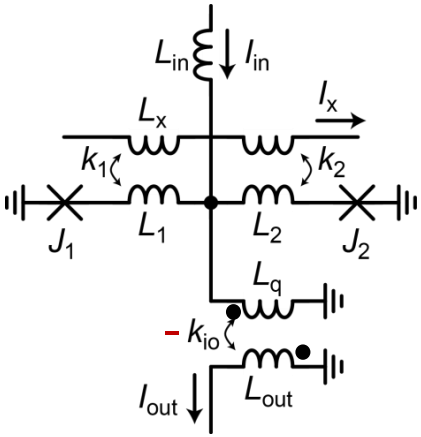

Majority

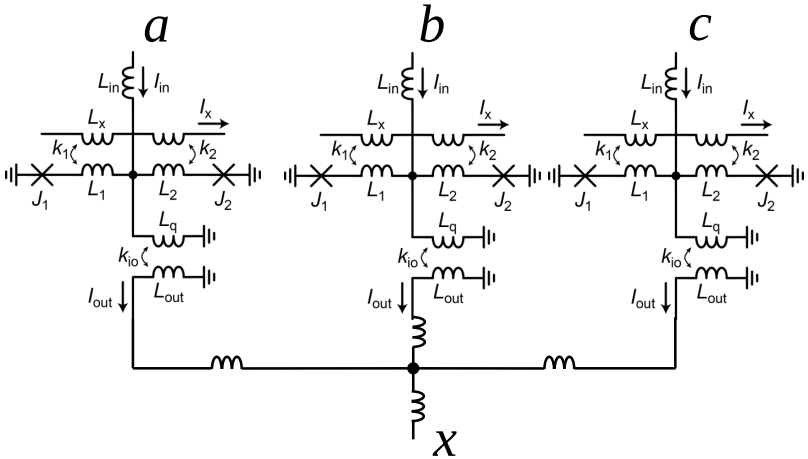

$$x = \mathrm{MAJ}(a, b, c) = ab + bc + ac$$

K. Inoue, *et al*. IEEE Trans. Appl. Supercond., **23**, 1301105 (2013).

Speed

- AQFP is driven by multi-phase clocks. (4-phase is typically used.)
- Target clock frequency is 5 GHz.
- Double excitation method can increases the clock frequency [1].
- Latency is improved by increasing the number of phase.

Clocking of AQFP gates

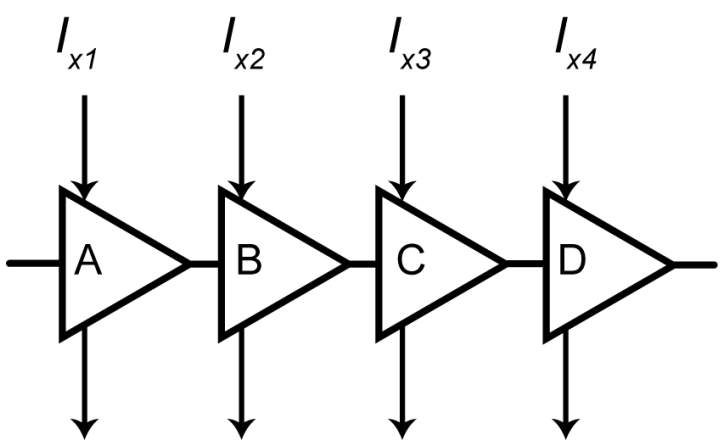

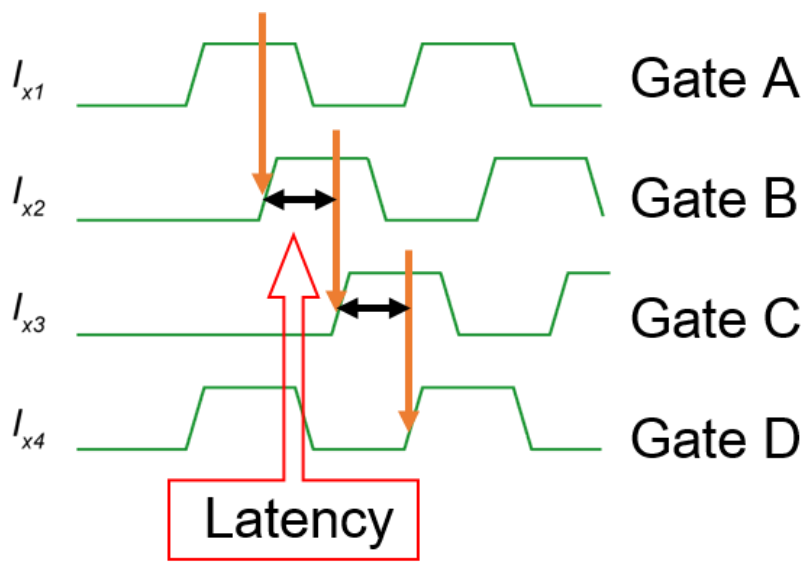

$$Latency = \frac{clock\ period}{number\ of\ phase}$$

[1] K. Fang, J. Appl. Phys., **121**, 143901 (2017).

Energy Consumption

- The static energy consumption is zero, the dynamic energy consumption is proportional to the clock frequency.
- The energy consumption is decreased by using high-J_c and high-β_c junctions.

β_c Dependence Bit-Energy of AQFP

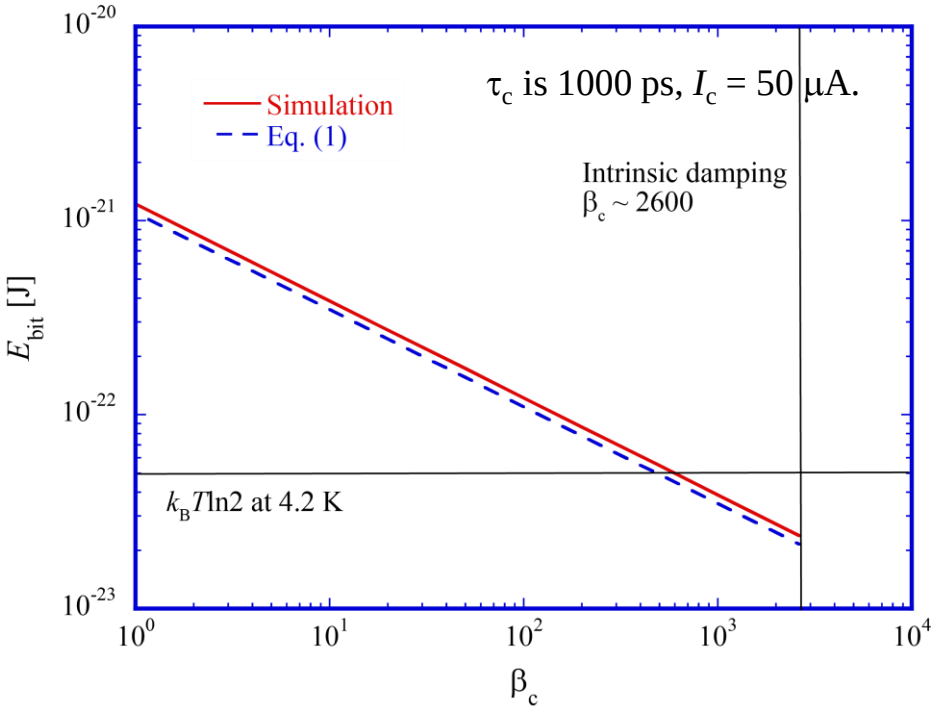

Bit energy:

$$E_{bit} = 2I_c\Phi_0 \frac{\tau_{sw}}{\tau_{rf}}$$

Intrinsic switching time:

$$\tau_{sw} \approx \frac{\Phi_0}{I_c R} = \sqrt{\frac{2\pi\Phi_0 c}{\beta_c j_c}}$$

Driving Ability

- Fan-out of AQFP gate is large (4 ~ 16).

1:8 splitter

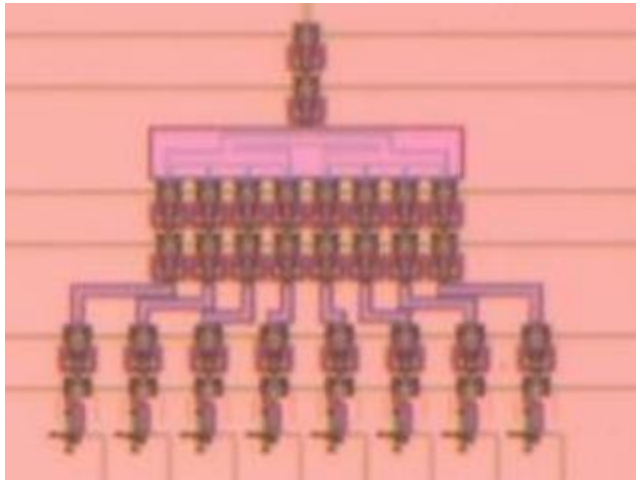

1:16 splitter

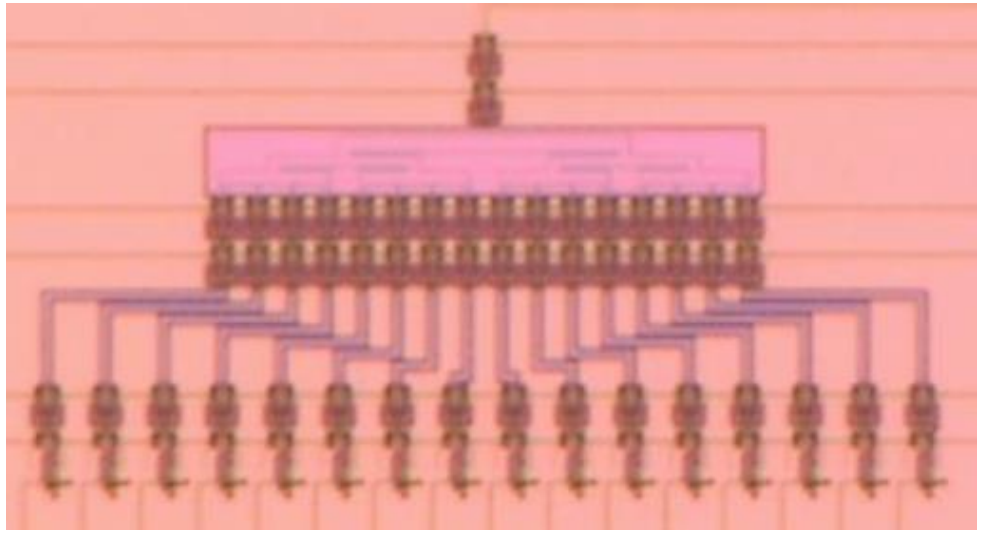

(cf. Fan-out of RSFQ circuits: 2 ~ 3.)

Connectability

- The output current of AQFP gate decreases with increase of interconnect inductance, which limits the wire length.
- L_{max} ~ 1 mm.

I_{out} vs. L_{wire}

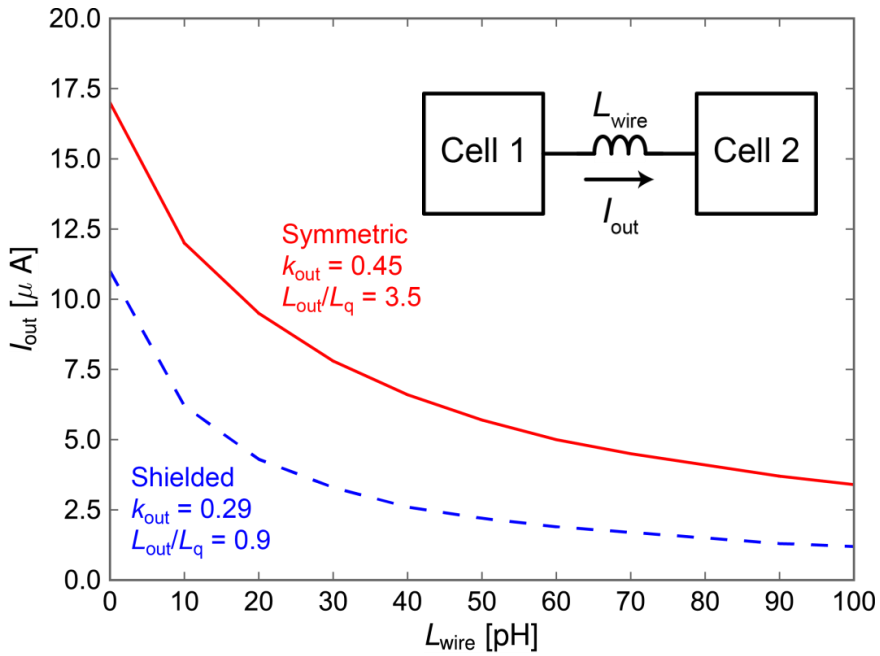

Testing of maximum wiring length

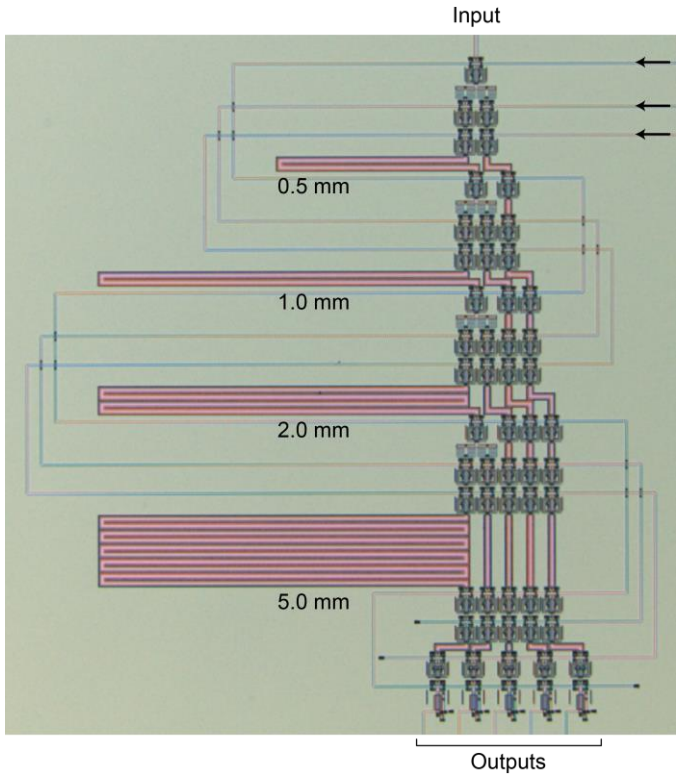

Error Rates

- Bit-error-rate of AQFP gate is quite small when $E_J >> k_B T$.

2 GHz bit-error-rate test results

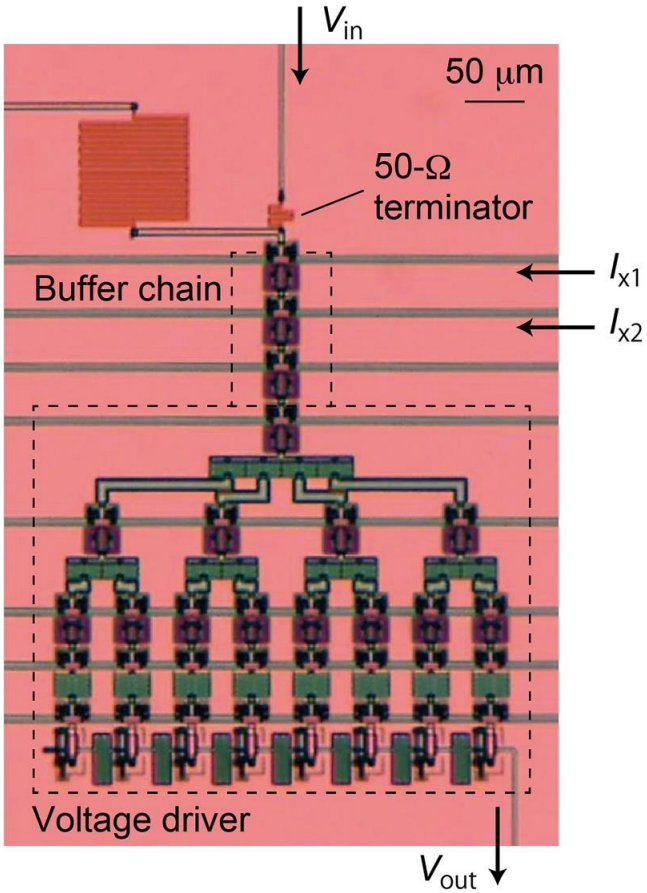

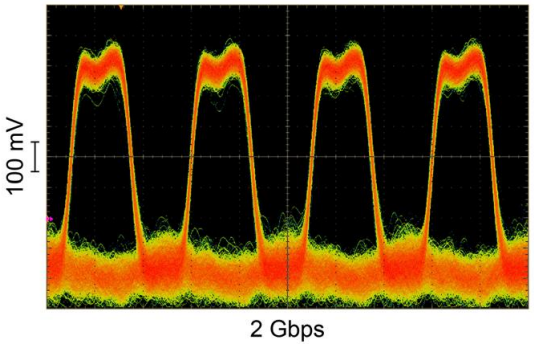

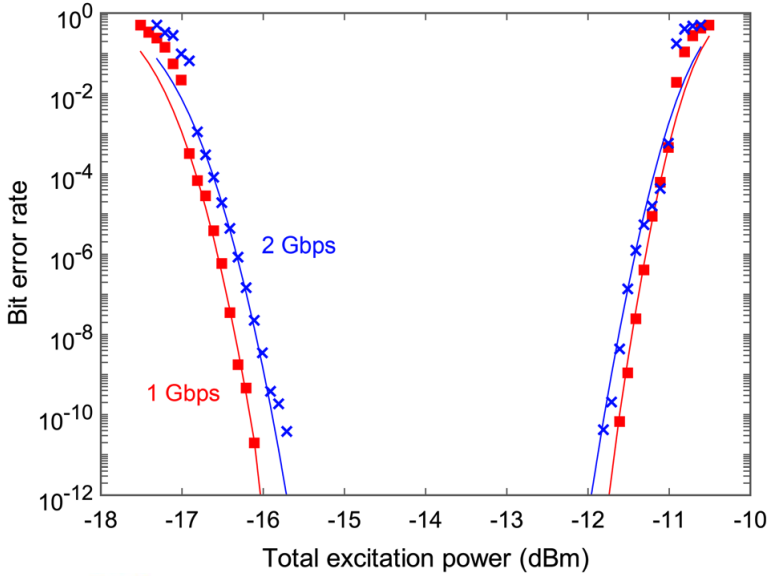

N. Takeuchi, *et al.*, Appl. Phys. Lett., **110**, 202601 (2017).

Robustness

Demonstrated 84k-Junction AQFP buffer array

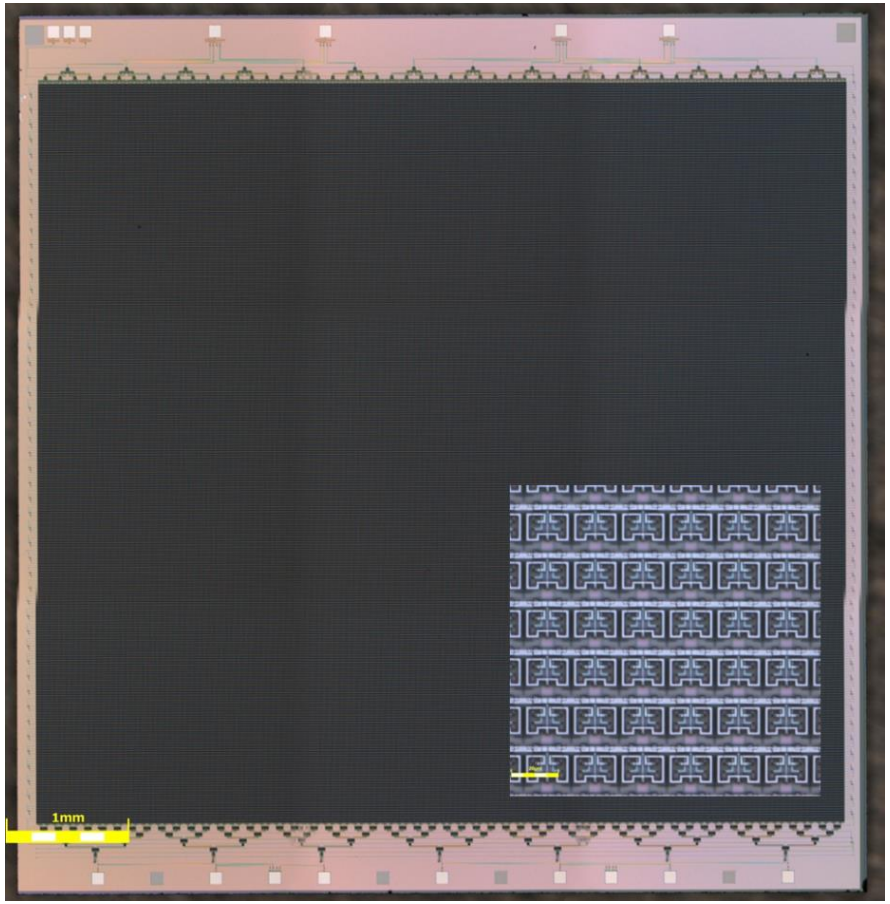

- AQFP is robust because
  - The operation is based on differential pairs of junctions and inductances.
  - The critical current of all junctions is the same.

Area	6.68×6.23 mm^2
Bias Current	3.60 mA
JJ number	83736

AIST 10 kA/cm^2 high-speed standard process (HSTP) was used.

Density

- Multi-layer processes improve the circuit density.

4-metal layer process

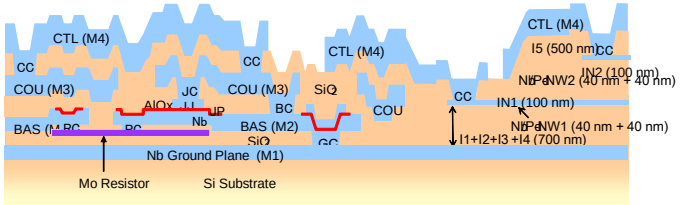

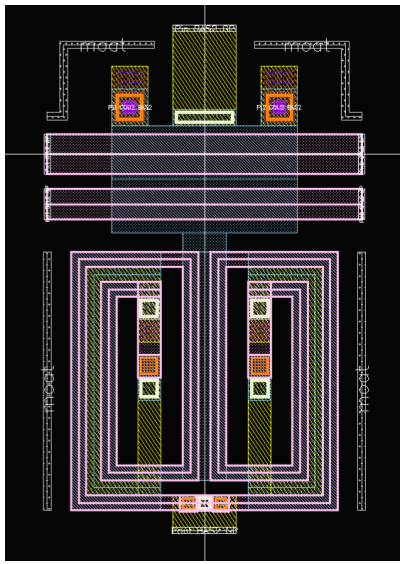

40 × 25 μm²

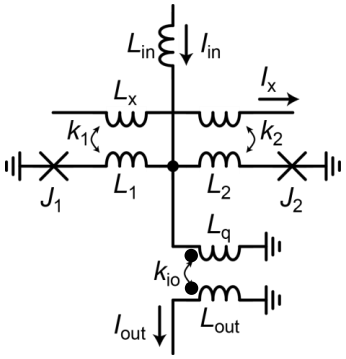

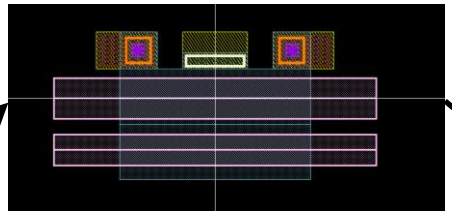

Excitation line
(upper layers)

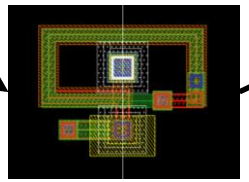

Transformer
(lower layers)

7-metal layer process

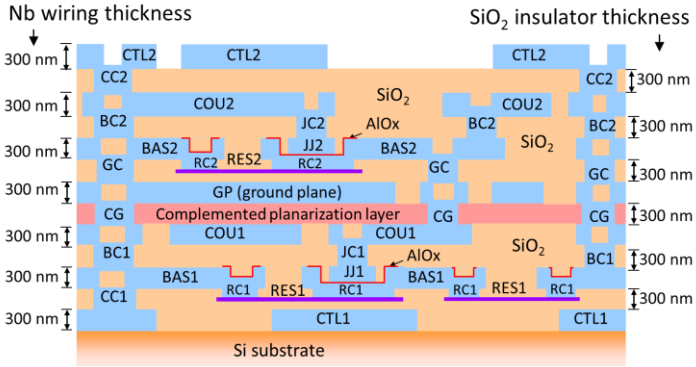

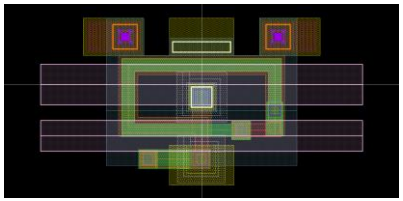

13 × 25 μm²
(-67.5% area reduction)

~ 0.3M gate/cm²

Design Methodology

- Logic cells can be designed by placing four building blocks: Buffer, NOT, Constant, Branch

Majority

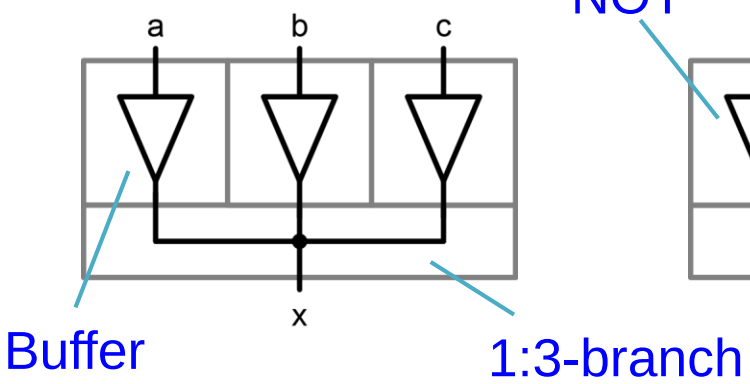

$$x = \mathrm{MAJ}(a, b, c)$$
$$= a \cdot b + b \cdot c + c \cdot a$$

NAND

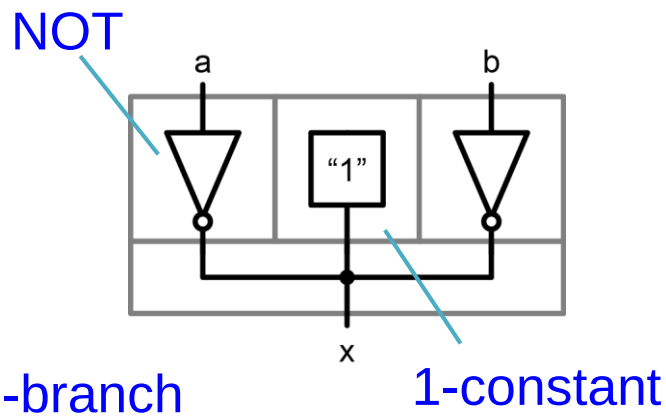

$$x = \mathrm{MAJ}(\bar{a}, 1, \bar{b})$$
$$= \bar{a} + \bar{b}$$
$$= \overline{ab}$$

Splitter

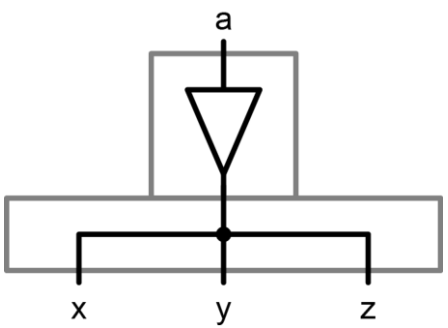

$$x = y = z = a$$

N. Takeuchi *et al.*, J. Appl. Phys. **117**, 173912 (2015).

Layout of Basic Cells

- Symmetric design prevents the parasitic coupling between the excitation and output inductance

Building block cells

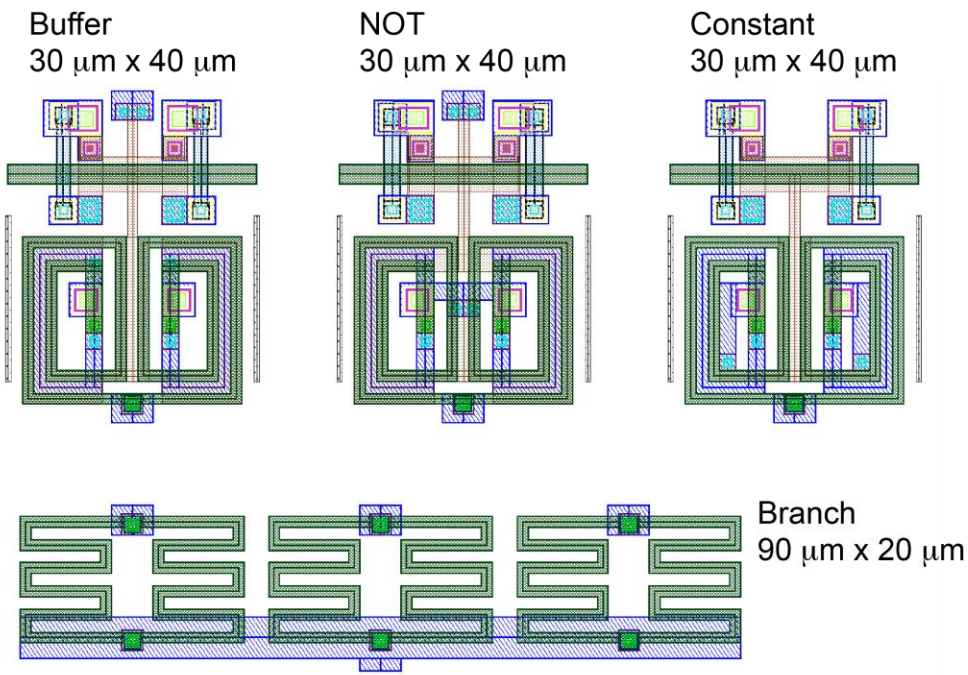

Majority cell

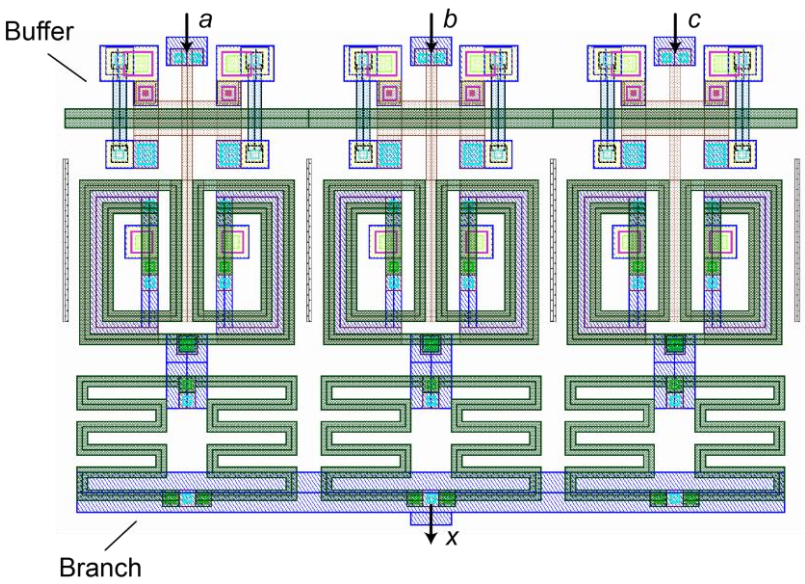

N. Takeuchi *et al.*, J. Appl. Phys. **117**, 173912 (2015).

AQFP Logic Design

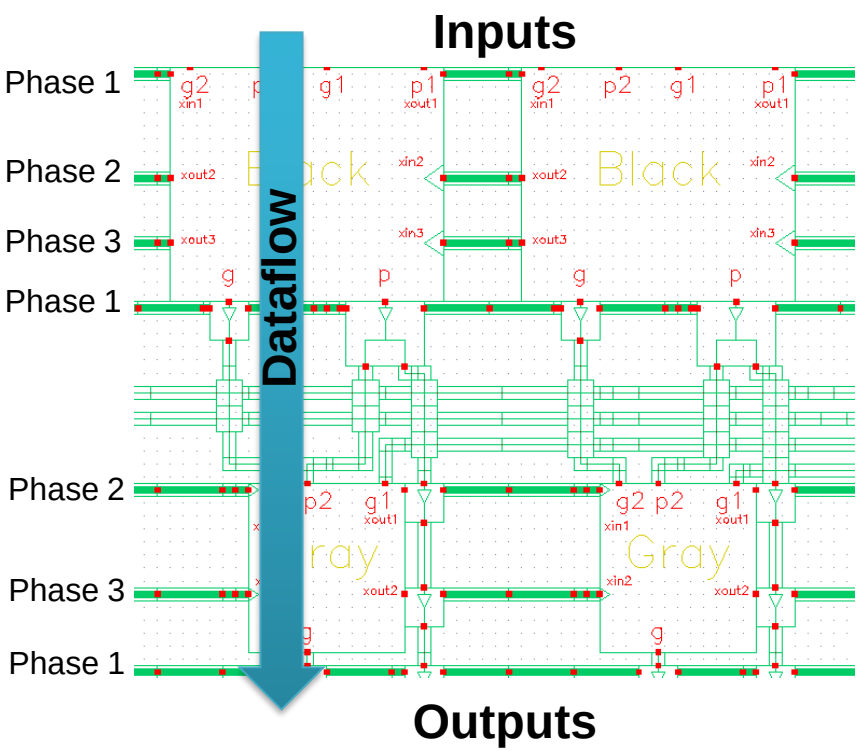

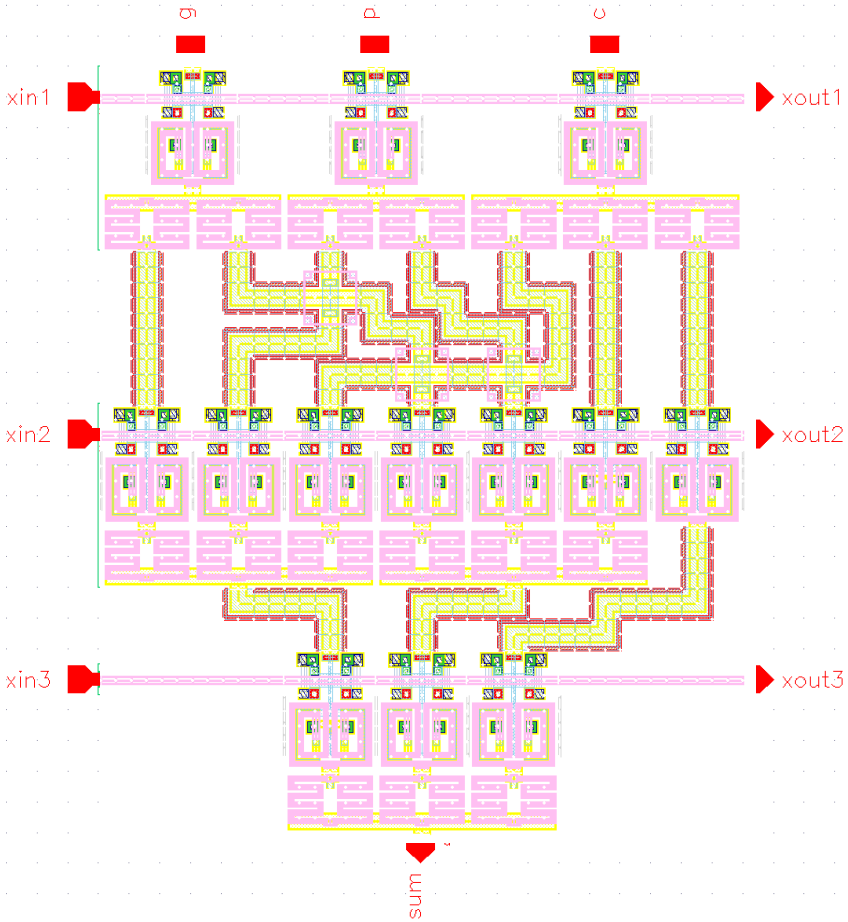

AQFP design flow

- Logic cells are placed together like Lego blocks
- Logic gates grouped by phase & data flow

Demonstrated AQFP Circuits

16-word by 1-bit register file

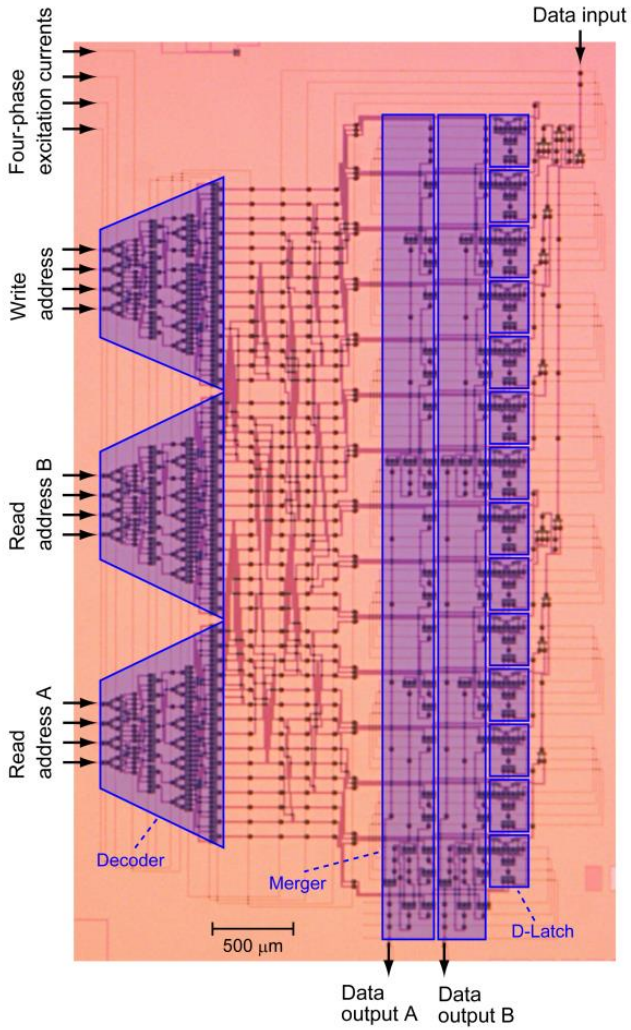

N. Tsuji et al., IEEE Trans. Appl. Supercond., **27** (2017).

8-bit carry look-ahead adder

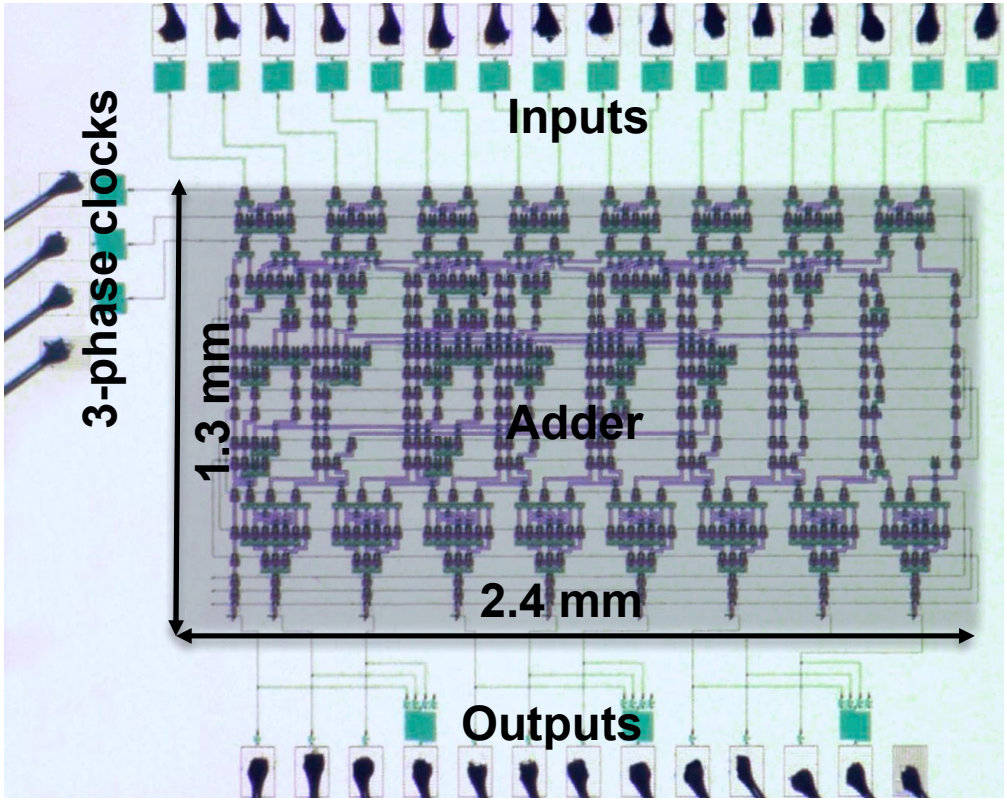

C. L. Ayala et al., IEEE Trans. Appl. Supercond., **27** (2017).

4-bit AQFP RISC Microarchitecture

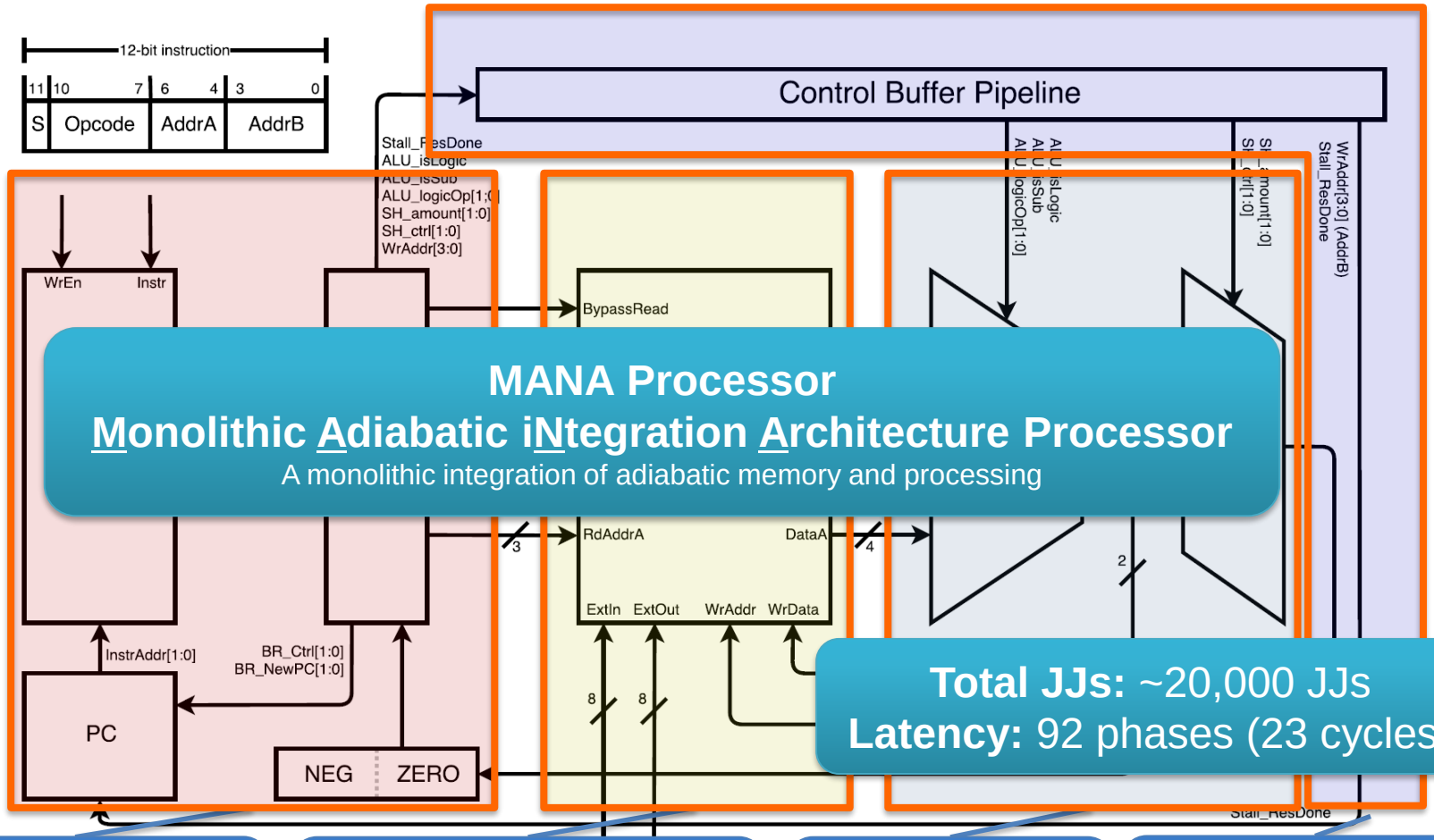

MANA Processor

Monolithic Adiabatic iNtegration Architecture Processor

A monolithic integration of adiabatic memory and processing

Total JJs: ~20,000 JJs
Latency: 92 phases (23 cycles)

Instruction Buffer, Decode, and Issue
4988 JJs, 22 phases

Register File with bypass Ext. I/O
7892 JJs, 20 phases

ALU, Shifter
1556 JJs, 20 phases

Control Pipeline, Routing
5148 JJs, 66 phases*

*overlapped with pipeline

EDA Tools for Top-Down Design

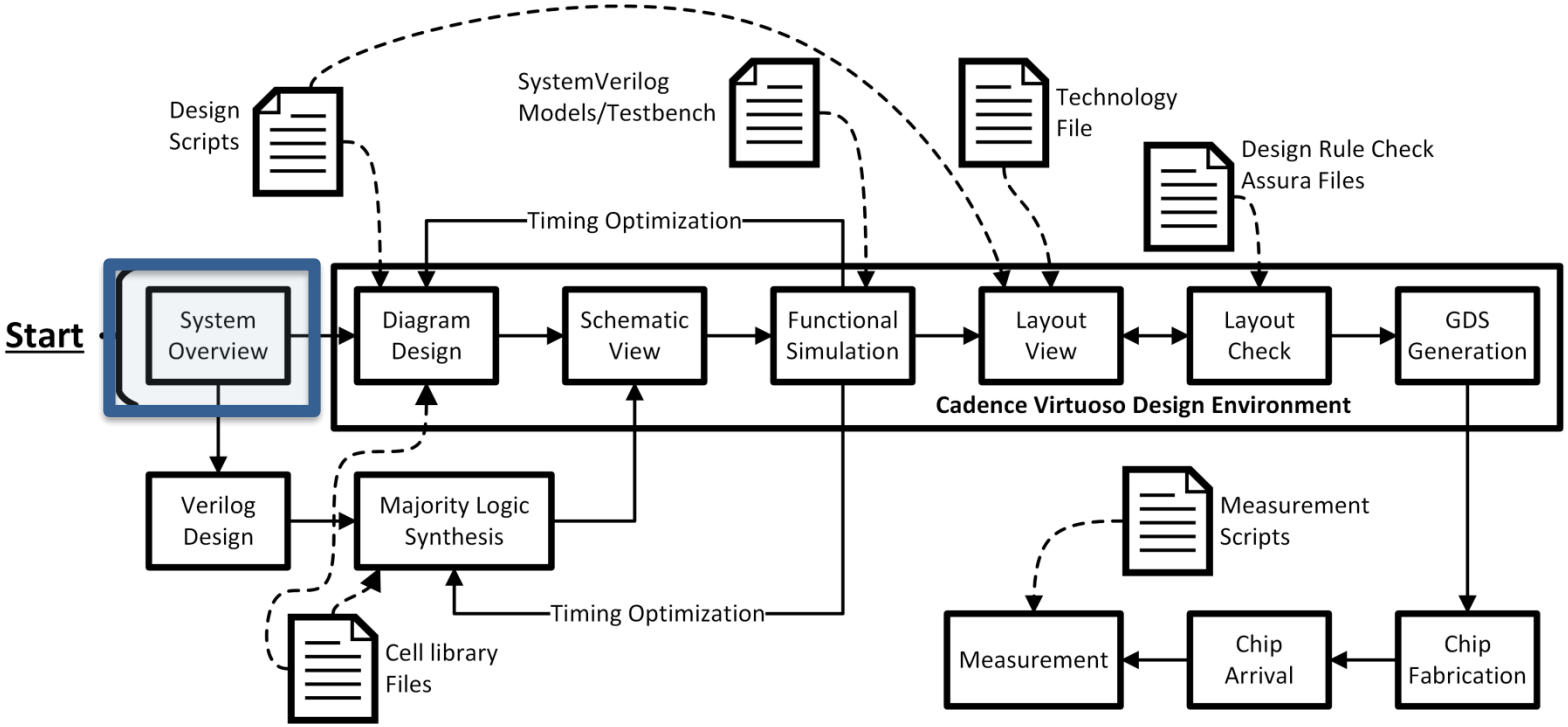

Verilog/VHDL | Schematic | Digital Sim. | Layout | Chip

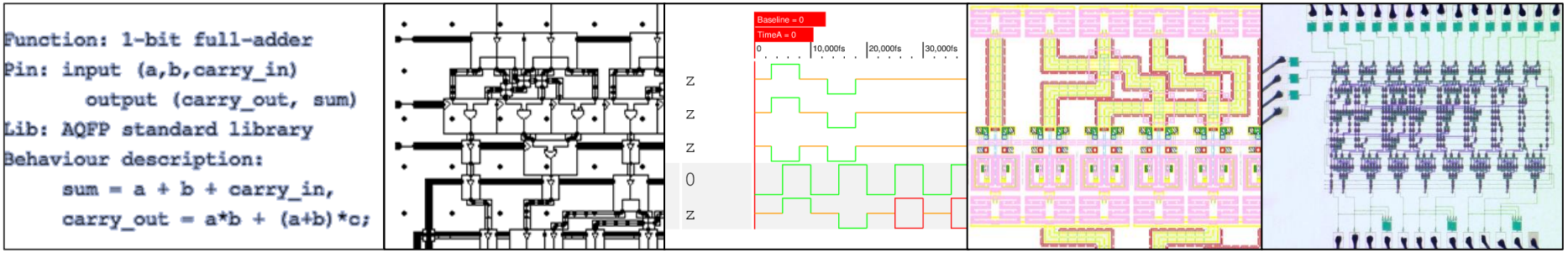

Qiuyun Xu, *et al*., IEEE Trans. Appl. Supercond., **27**, 1301905, (2017).

YNU YOKOHAMA National University

AQFP Circuit Design using EDA Tools

Layout of 16-b AQFP carry-look-ahead adder

Data input

Excitation current: Phase 1 - 3

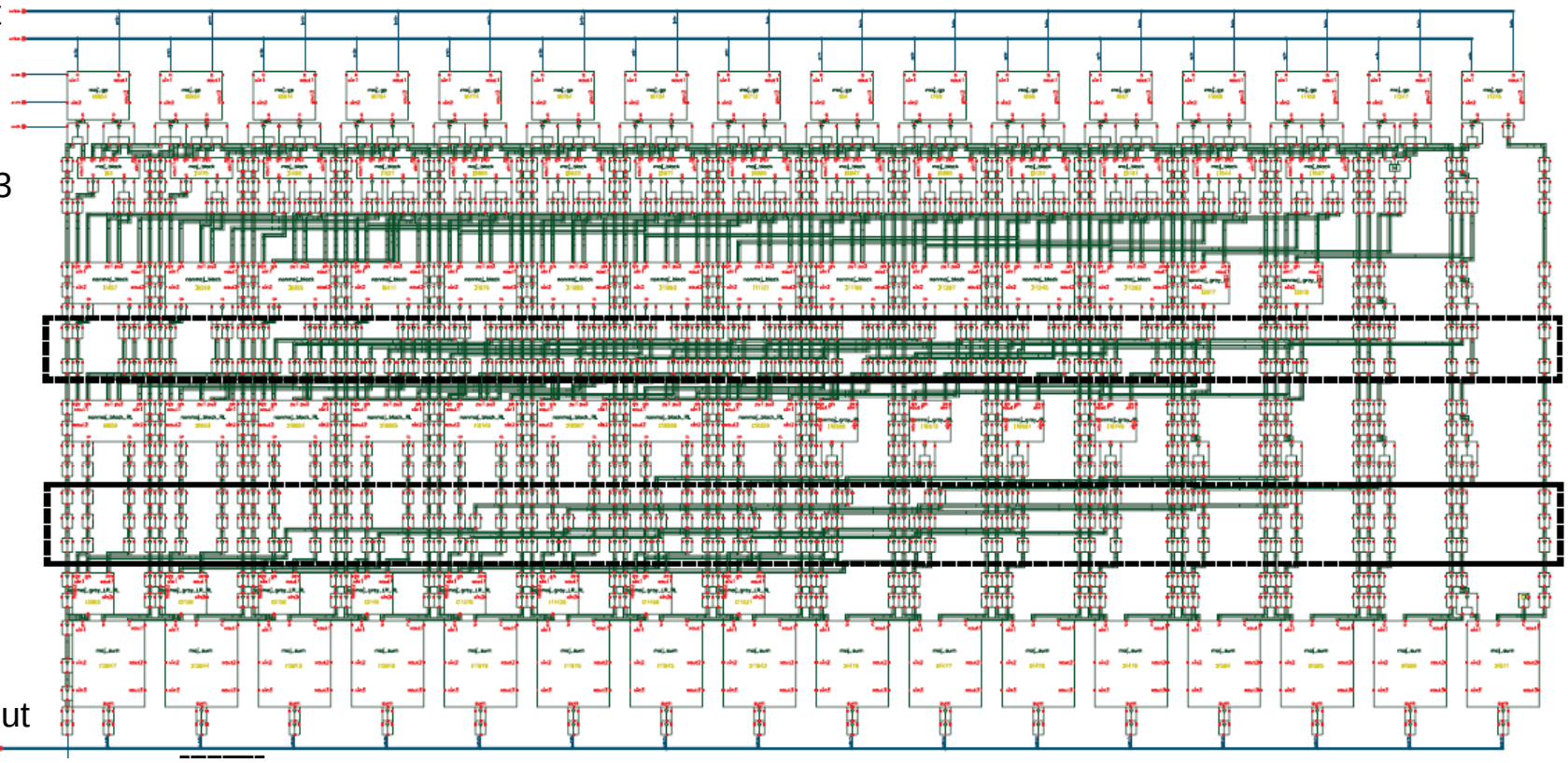

Data output

Y. Murai, et al., IEEE Trans. Appl. Supercond., **27**, 1302209 (2017).

Future Directions

- Investigation of design methodology and EDA tools for large-scale AQFP integrated circuits
  - Wire-length limitation
  - Multi-phase clock distribution
  - Majority-based logic synthesis
  - Microprocessor architecture
- More energy efficient logic
  - Use reversible QFP (RQFP) circuits [1].
- New applications
  - Control and readout circuits for Quantum computers.
  - Read out circuits for superconducting sensor arrays

[1] N. Takeuchi, *et al*. Scientific Reports, **4**, 6354 (2014).

Summary

- Adiabatic quantum flux parametron (AQFP) is extremely energy efficient logic.
  - ~1 zJ/bit @5 GHz
  - Three orders of magnitude smaller than energy-efficient SFQ logic
  - Six orders of magnitude smaller than CMOS logic
- AQFP has excellent properties as a logic circuit in terms of gain, functionality, speed , energy consumption, driving ability, error rates, robustness, and density.
- AQFP microprocessors are under development based on CMOS-like design methodology and top-down EDA tools.

Thank you for your attention.

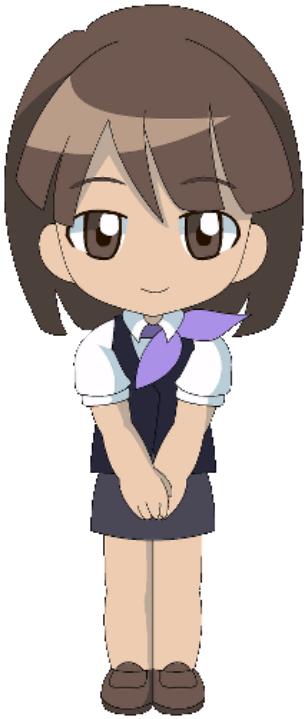

BACK UP

Energy and Speed of AQFP Logic

- Extremely small energy consumption
  - Zero static energy
  - Small dynamic energy due to adiabatic operations

$$E_b << I_c\Phi_0$$

- Medium clock speed

  ~ 5 GHz (4-phase)
- High gain
- High robustness

Bit Energy vs. Clock Period

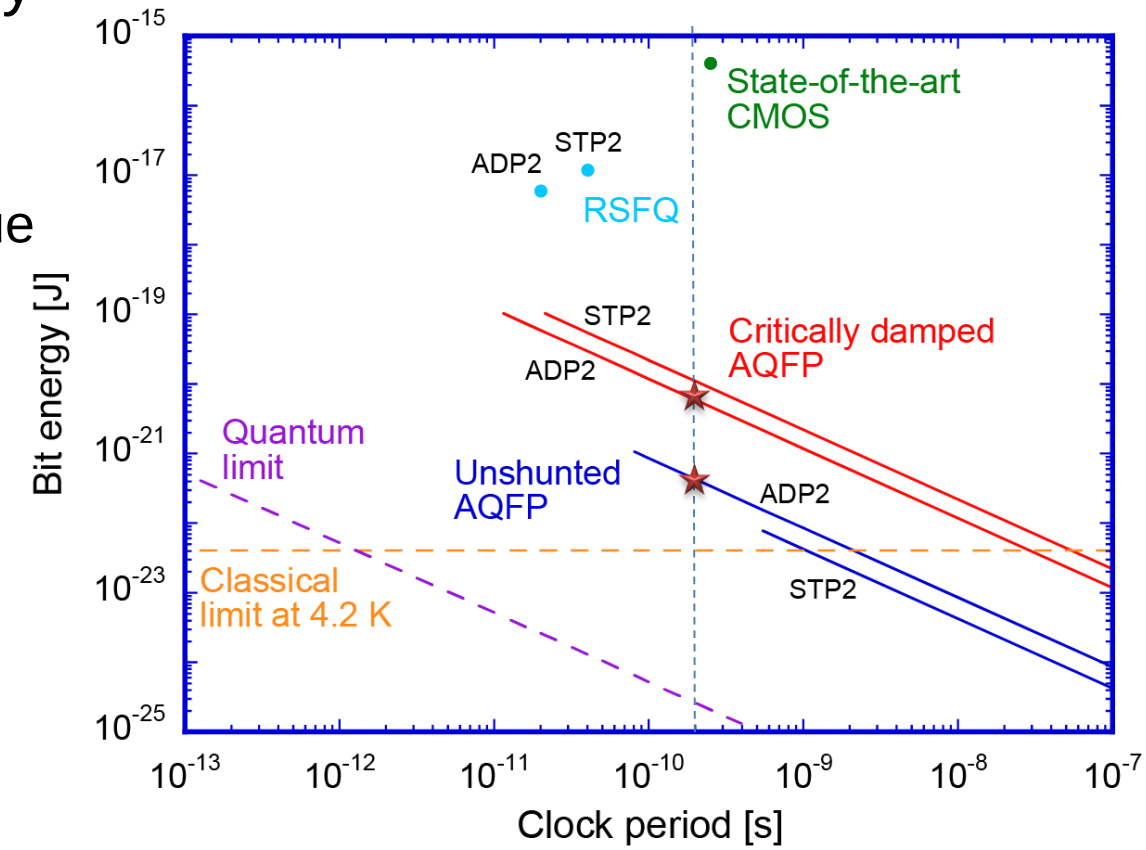

N. Takeuchi et al., Supercond. Sci. Technol. 28, 015003 (2015).