Comparative Analysis of Finite-Element Method and Volume-Element Method for Thermal Modeling of Superconducting DC Transmission Systems

D.I. Doukas[1], G.K. Papadopoulos[1], A.I. Chrysochos[2], T.A. Papadopoulos[3], D.P. Labridis[1]

[1] Power Systems Laboratory, School of Electrical and Computer Engineering, Aristotle University of Thessaloniki, Thessaloniki, Greece
[2] Cablel Hellenic Cables S.A., Viohalco Group, Sousaki Korinthias, Korinthos, Greece
[3] Power Systems Laboratory, Department of Electrical and Computer Engineering, Democritus University of Thrace, Xanthi, Greece

INTRODUCTION

Superconducting transmission lines are a promising alternative for cost-efficient and high-capacity power transmission. In the upcoming years, grid penetration of high temperature superconducting (HTS) dc cables, especially for bulk power transmission, is expected to increase. Although HTS cables present significant advantages, such as near-zero transmission losses, the special characteristic of varying performance under critical temperature conditions needs to be studied thoroughly by detailed thermal analysis. Considering that need, this paper brings validation to a recently proposed volume-element method (VEM) by the use of the finite-element method (FEM). By utilizing both approaches, temperature and pressure distribution over length and time for a 2D axisymmetric cable model is identified. For the VEM and FEM methods, the flexible parabolic-elliptic partial differential equations (PDEPE) solver of MATLAB and COMSOL Multiphysics are used, respectively. The analysis is conducted for a bipolar cable suggested by EPRI for long-distance HTS dc transmission.

VEM ANALYSIS

A. The partial differential equations (PDEs) representing thermodynamics and heat transfer laws are written in the form of (1) and are introduced to the PDEPE solver of MATLAB. PDEPE solver deals with initial-boundary value problems for varying space z and time t.

$$c\left(z,t,T,\frac{\partial T}{\partial z}\right)\frac{\partial T}{\partial t} = z^{-m}\frac{\partial}{\partial z}\left(z^{m} f\left(z,t,T,\frac{\partial T}{\partial z}\right)\right) + s\left(z,t,T,\frac{\partial T}{\partial z}\right) \quad (1)$$

Initial conditions for $t = t_0$ and all z are given by (2).

$$T(z,t_0) = T_0(z) \quad (2)$$

Boundary conditions for all t and for one of the cable terminations a or b are determined by (3) and are expressed in terms of the flux term f.

$$p(z,t,T) + q(z,t) f\left(z,t,T,\frac{\partial T}{\partial z}\right) = 0 \quad (3)$$

B. VEM analysis divides cable layers in finite volumes using cylindrical coordinates for simultaneous discretization over time and space. Energy equations in terms of thermodynamics and heat transfer are solved in order to identify the variation of properties, such as temperature and liquid coolant pressure, over the cable length and time. The analysis that follows results in a system of PDEs representing heat transfer, between VEs in r and z directions.

C. The cable geometry, shown in Fig. 1, is based on a project conducted by EPRI focused on long-distance, high-power HTS dc transmission, which enables bidirectional power transfer with one cable and utilizes liquid Nitrogen (LN_2) as coolant. This geometry results in a more cost-efficient approach, since the cooling circuit is the same for both power flow directions. YBCO is considered as the HTS material, while XLPE is used for insulation.

CASE STUDY – VEM ANALYSIS

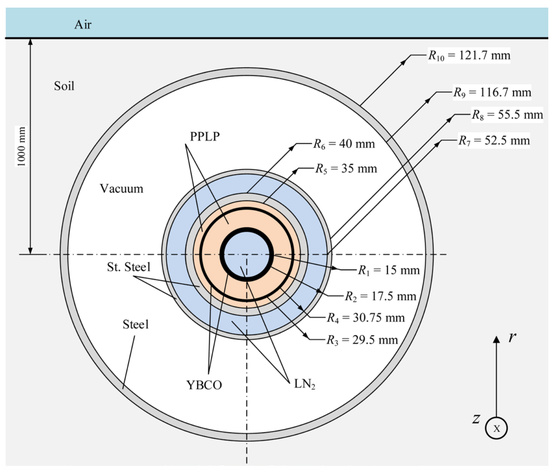

Fig. 1. HTS cable cross-section.

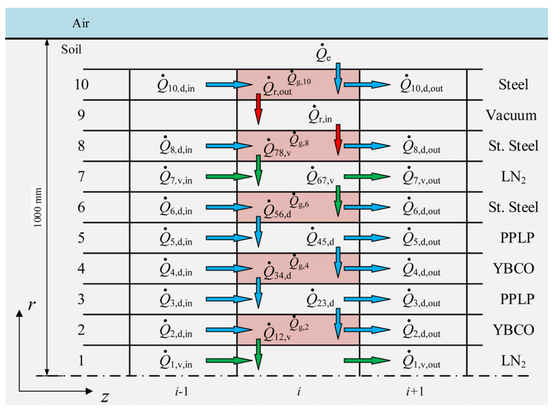

Fig. 2. Heat transfer and VE discretization.

FEM VALIDATION

Considering the need for accurate thermal analysis as well as the absence of laboratory facilities, validation of the accuracy to the proposed VEM by the use of FEM is carried out. By utilizing both approaches, temperature and pressure distribution over length and time for the same HTS cable, presented in Fig. 1, is identified.

COMSOL Multiphysics is used for the analysis of heat transfer by conduction, convection and radiation with the FEM approach. All material properties are temperature dependent and the study is coupled, since both "Heat Transfer" and the "L-VEL Turbulent Flow" components are included. Similar initial and boundary conditions are adopted as with VEM. Finally, the HTS cable of Fig. 1, of 10-m length and for 600 s is studied with the mesh to be physics-controlled.

In Figs. 3 and 4, the temperature distribution for the HTS dc cable at $t = 0$ s and $t = 6000$ s, as solved by FEM, is illustrated, respectively. It is evident that in Fig. 3 the HTS layers are not frozen yet, whereas in Fig. 4 all layers are already cooled.

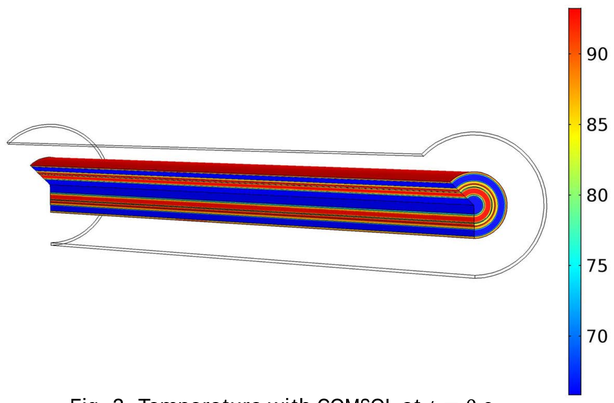

Fig. 3. Temperature with COMSOL at $t = 0$ s.

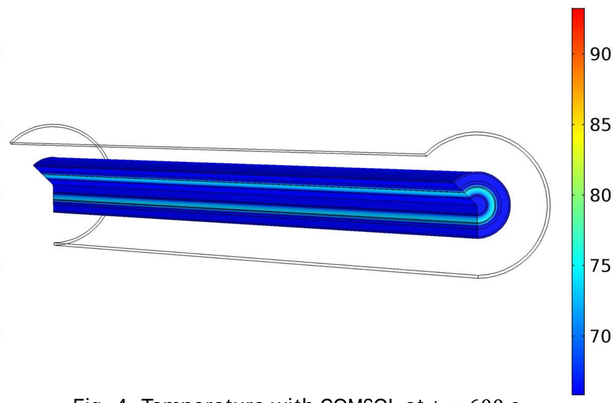

Fig. 4. Temperature with COMSOL at $t = 600$ s.

RESULTS

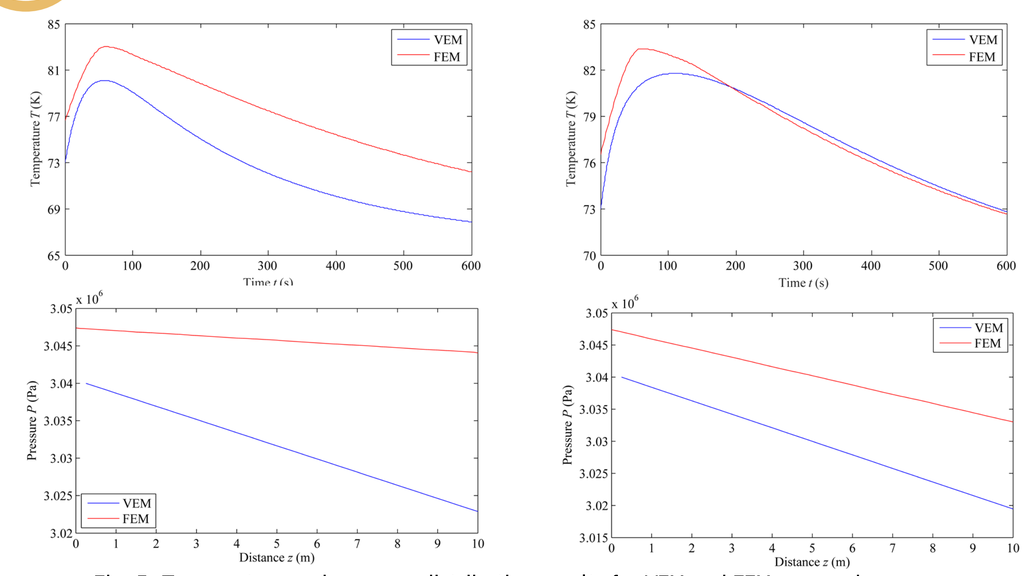

Fig. 5. Temperature and pressure distribution results for VEM and FEM approaches.

In Fig. 5, results considering temperature and pressure distribution for various time instants and cable positions for both approaches are compared. Considering temperature, in Figs. 5a and 5b, it is evident that the maximum deviation is approximately 6 K, which is less than 10 % and occurs at the beginning of the cable, where LN_2 is channeled. For $z = 10$ m, the resemblance between the results obtained by the two approaches is remarkable, even during the heat transient period.

As for the pressure drop calculation, a similar trend is evident whereas deviations exist mainly due to the short HTS cable length examined.

CONCLUSIONS

A detailed mathematical formulation for thermal modeling of HTS dc cables, based on VEM is presented and solved. It focuses on a geometry presented by EPRI for long-length, high-power HTS dc transmission. The temperature distribution over space and time is obtained by properly solving a system of PDEs. Furthermore, modeling of the HTS cable with FEM revealed small deviations with the VEM approach, verifying the accuracy of VEM modeling in a previous work. Especially for the thermal analysis and for symmetric configurations, VEM provides similar results in reduced time. On the other had, for more accurate CFD and irregular geometries, FEM is more reliable.

***Contact details*:** Dr. Dimitrios Doukas
Power Systems Laboratory,
Aristotle University of Thessaloniki,
Thessaloniki, Greece

Aristotle University of Thessaloniki
University Campus, Bldg. D,
54124 Thessaloniki, Greece

tel. +30-2310-996325
e-mail: doux@auth.gr
website: power.ee.auth.gr