# ILU industrial electron accelerators.


Aleksandr Bryazgin

Budker Institute of Nuclear Physics

Novosibirsk, Russia


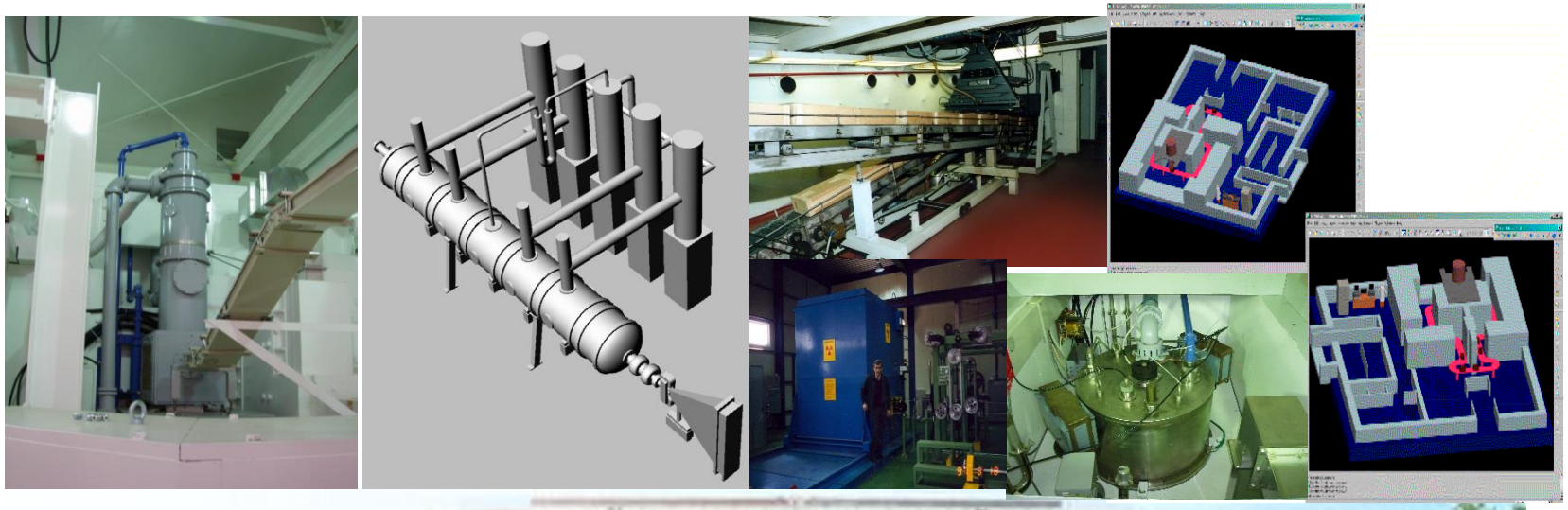

# Content

- Ordinary ILU accelerators.
  - ILU-8 (1 MeV, 20 kW)
    - Design and Main features.
    - Examples in real industry
  - ILU-10 (5 MeV, 50 kW)
    - Design and main features.
    - Examples in real industry
- New multi-cavity ILU accelerators.
  - Reasons for developing
  - Design
  - ILU-14 (10 MeV, 100 kW)
  - ILU-12 (7.5 MeV, 40 kW)

# ILU-8 1 MeV 20 kW

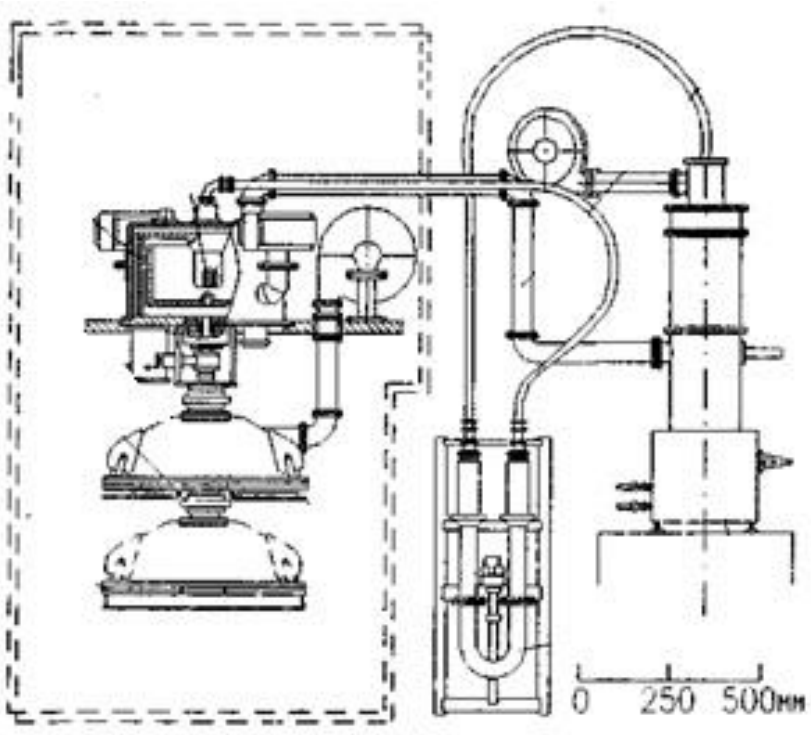


Compact – Local shielding,
RF-triode - cheaper operation,
Self-excitation of RF - wide temperature diapason,
Pulse – better efficiency

RF-triode GI-50A
With 2 MW RF power

Pulse duration 800 mks
Pulse repetition 1-50 Hz
RF frequency 175 MHz
Dim D800x800 mm

# ILU-8 1 MeV 20 kW

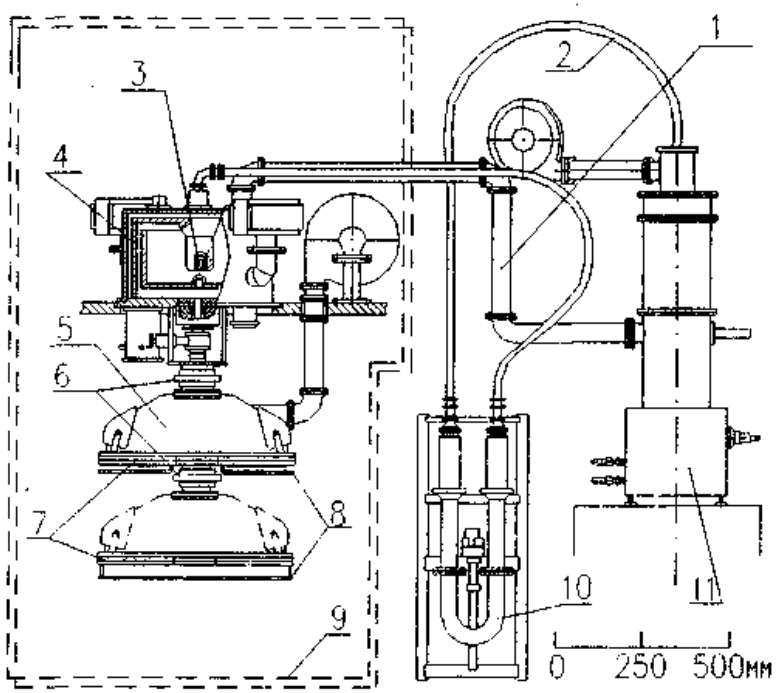


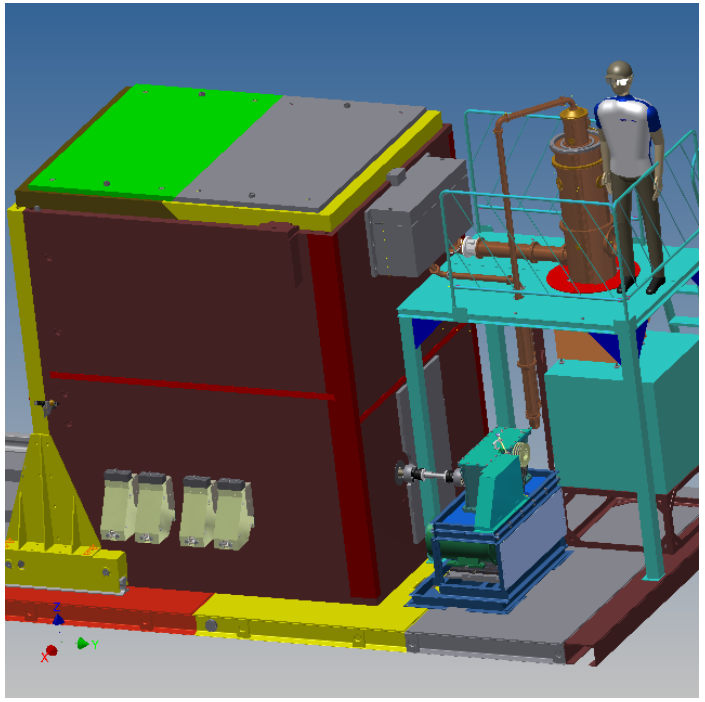

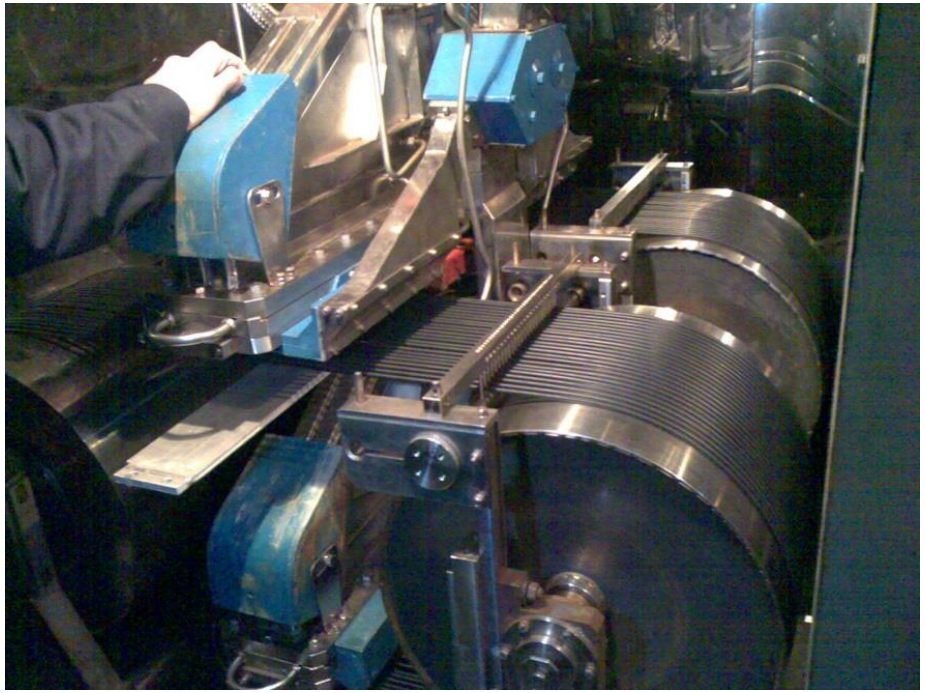

# 4-sided cable irradiation on ILU-8

- Beam extraction device for 4-sided irradiation

  allows to increase

  beam usage efficiency

  comparing with

  2 sided irradiation
- No cable twist

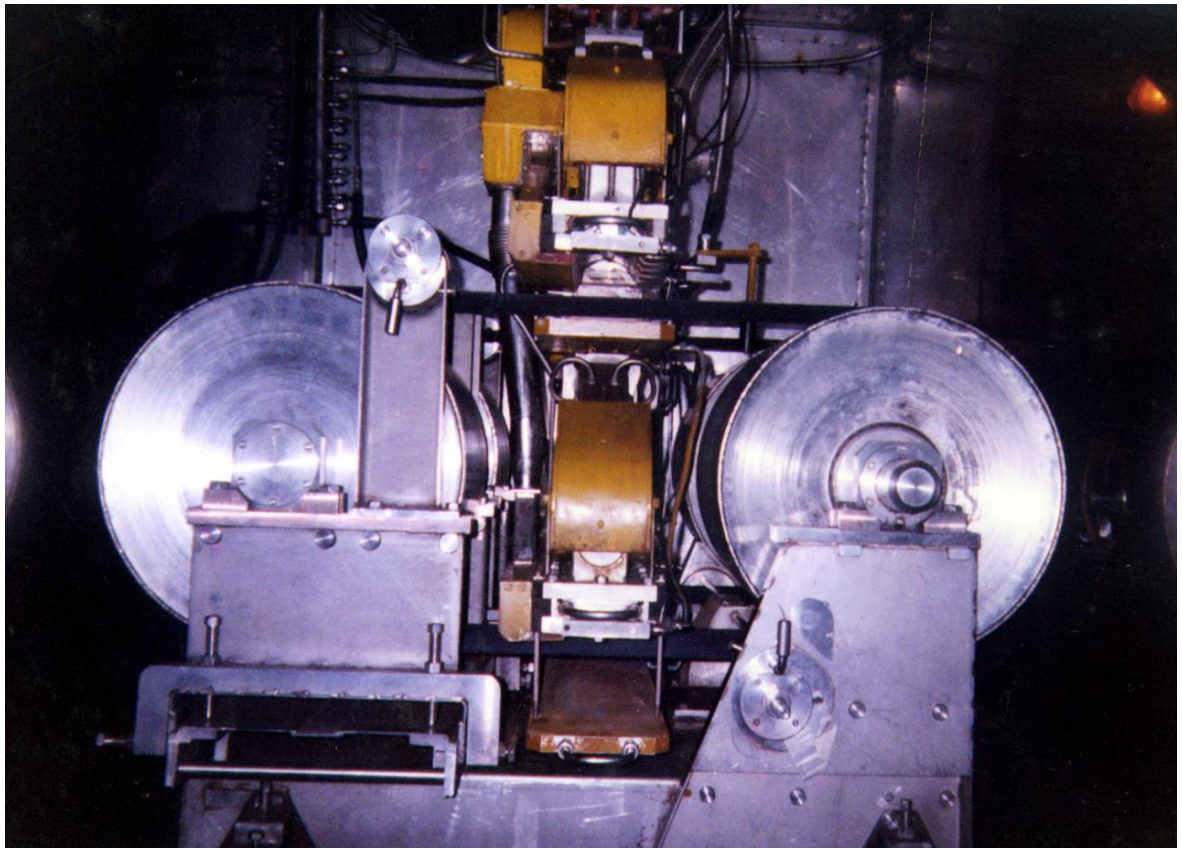

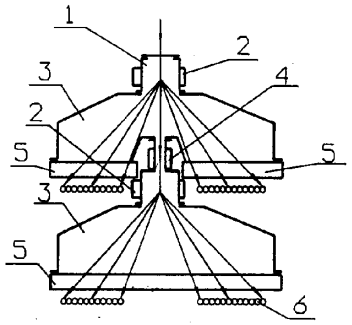


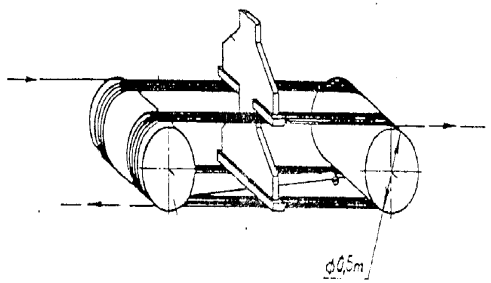

# ILU-10 5 MeV 50 kW

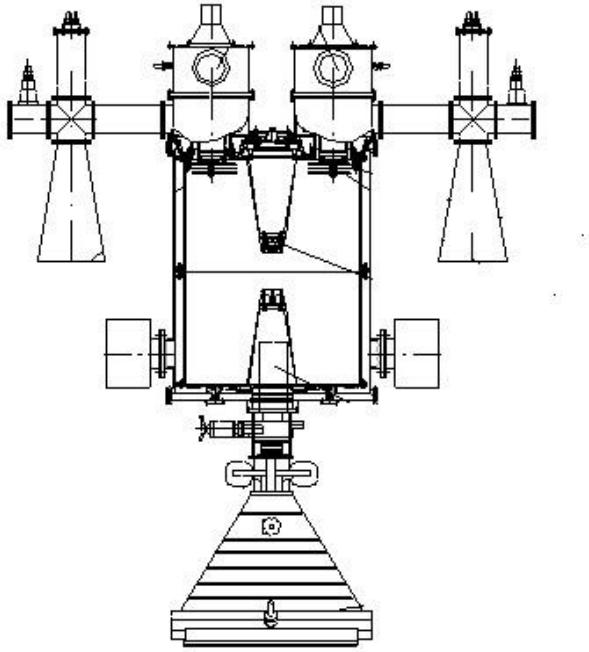

- Pulse duration 500 mks
- Pulse repetition 1-50 Hz
- RF frequency 115 MHz
- Dim. D1280x1480 mm

# Centre of radiation technologies in Novosibirsk.

# Centre of radiation technologies in Novosibirsk.


Conveyor load/unload zone.


Entrance to labyrinth.

# Sterilization center based on ILU-10 in Semipalatinsk nuclear test site (STS) in Kazakhstan.

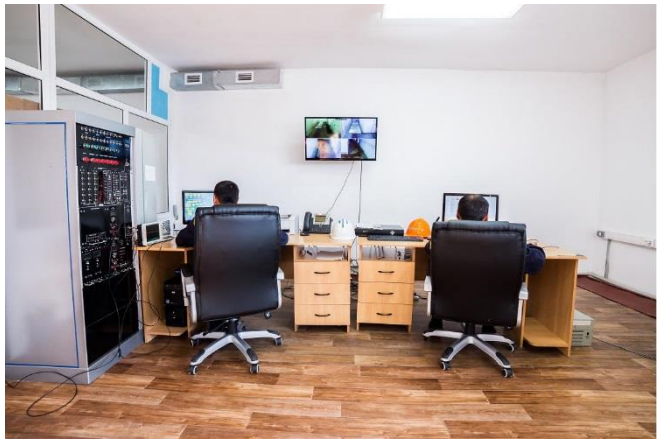

ЯДРОЛЫҚ ТЕХНОЛОГИЯЛАР ПАРКІ
PNT
PARK OF NUCLEAR TECHNOLOGIES

Парк Ядерных Технологий

# ILU-10 in Poland, RadPol SA, 2008


- Treatment of polymer pipes
- Treatment of cables
- Movable accelerator between two conveyors.

# Medical sterilization and food irradiation markets required more energy and power.

**Food irradiation requirements**

- 10 MeV E-beam → small power
- X-ray 5 MeV → huge power (conversion rate ~8%)
- X-ray (USA) 7.5 MeV → high power (conversion rate~13%)

# New multi-cavity ILU accelerator

**One cavity**

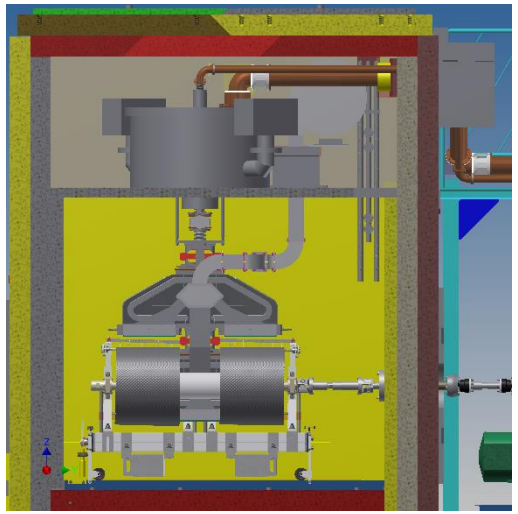

**Multi-cavity**

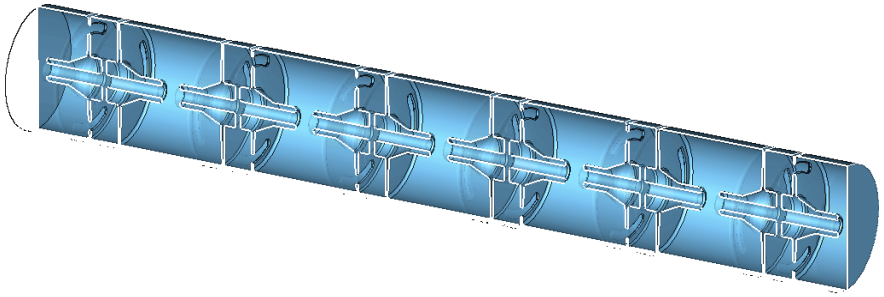

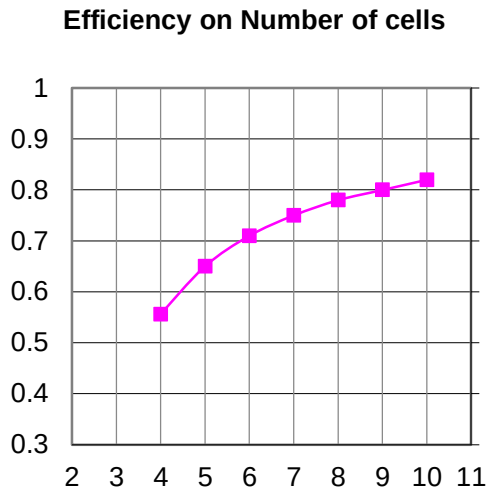


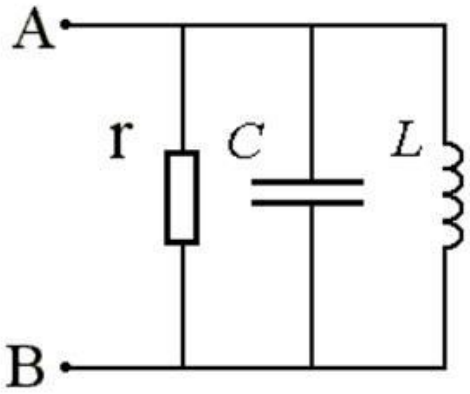


$$P_{loss} = U^2/2R_{shunt}$$

$$P_{loss} = \sum_n U^2/2R_{shunt}$$

# New multi-cavity ILU accelerator.

**Pulse mode vs CW (Constant wave)**

- $P_{losses}$ does not depend on beam current and depend on U.
- We may achieve required average power and energy by:
  - Short pulse and big pulse current
  - Long pulse and small pulse current or even CW
- Then shorter $t_{pulse}$ and more $P_{pulse}=U_{beam}*I_{beam}$ then less $P_{losses}$
- => efficiency of cavity - $\acute{\eta}_{pulse} > \acute{\eta}_{CW}$

- **Pulse Linear Accelerator PLA=ИЛУ (ILU) in Russian**

# Cavity voltage and beam current for one cavity.

CW

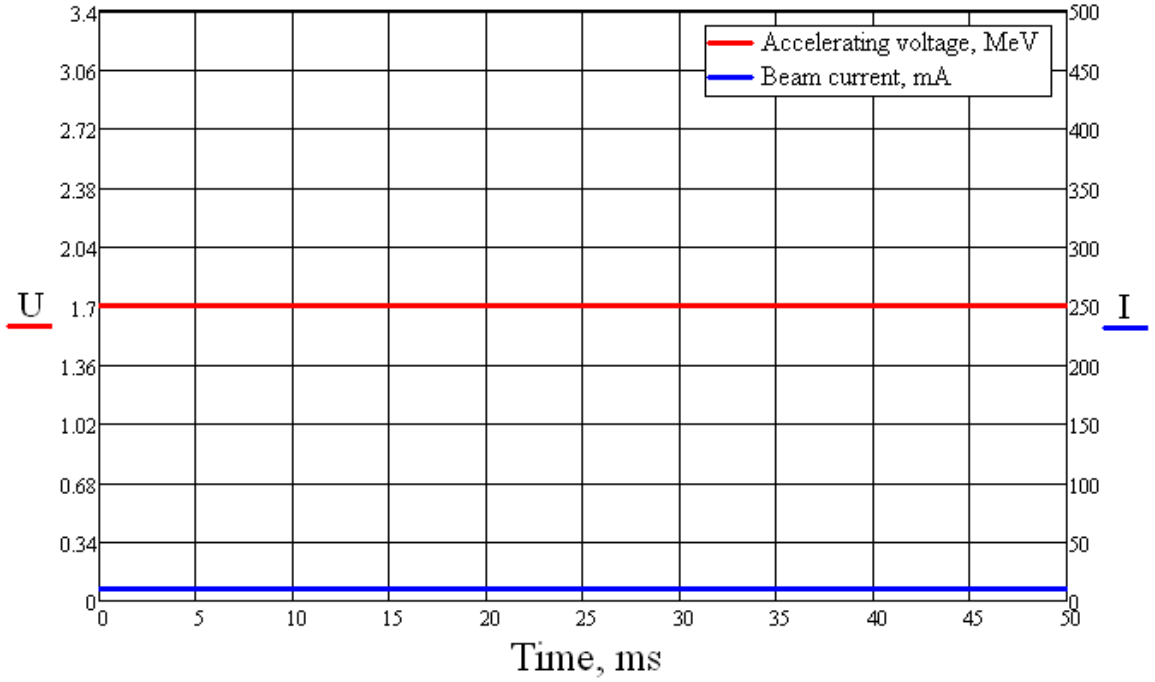


Pulse

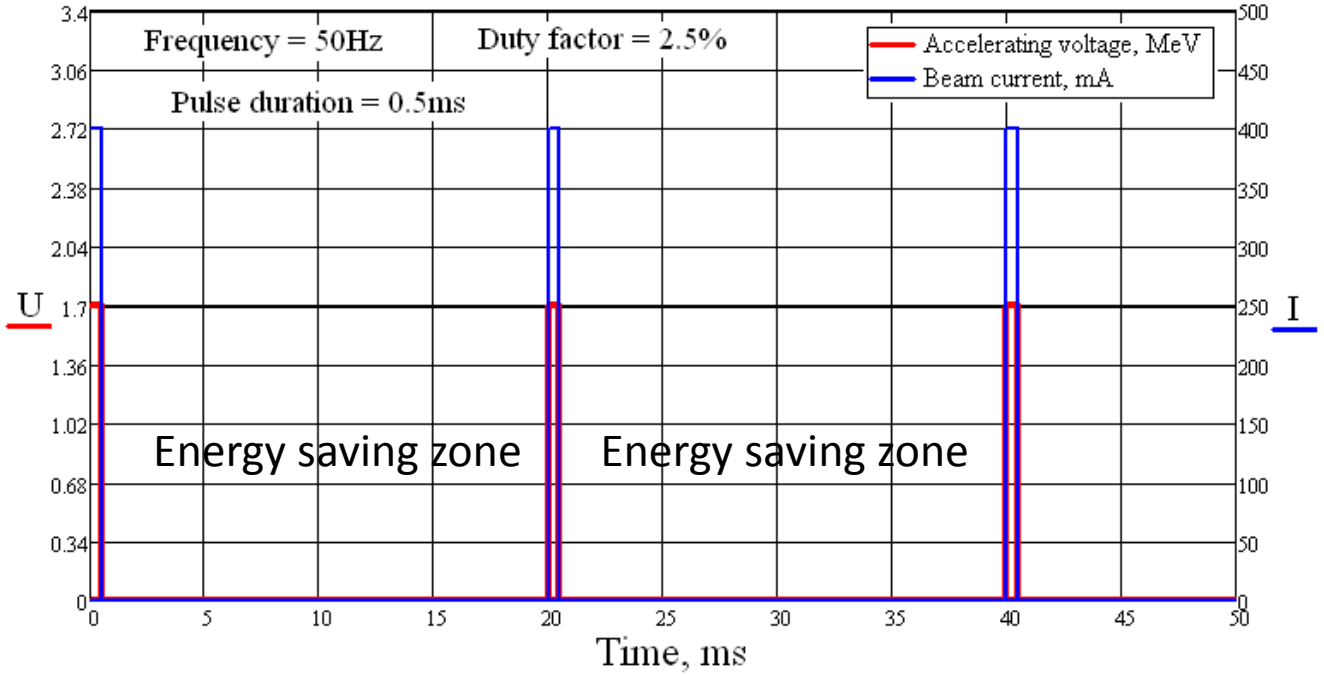

# New multi-cavity ILU accelerator.

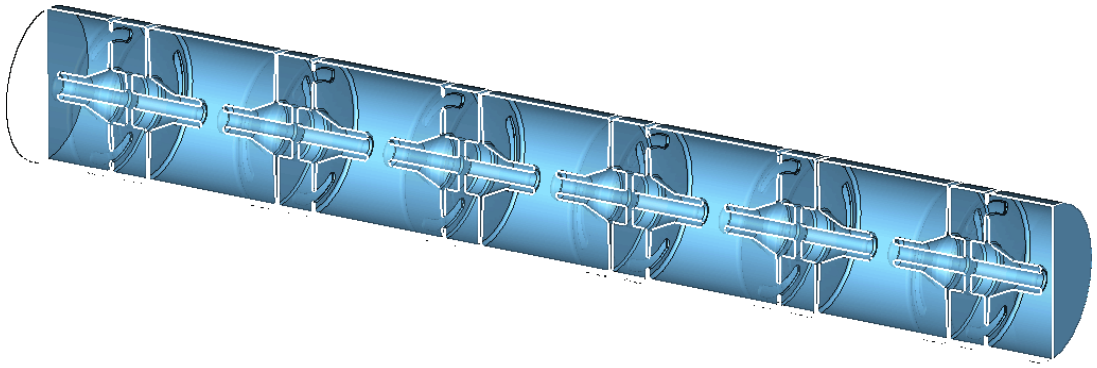

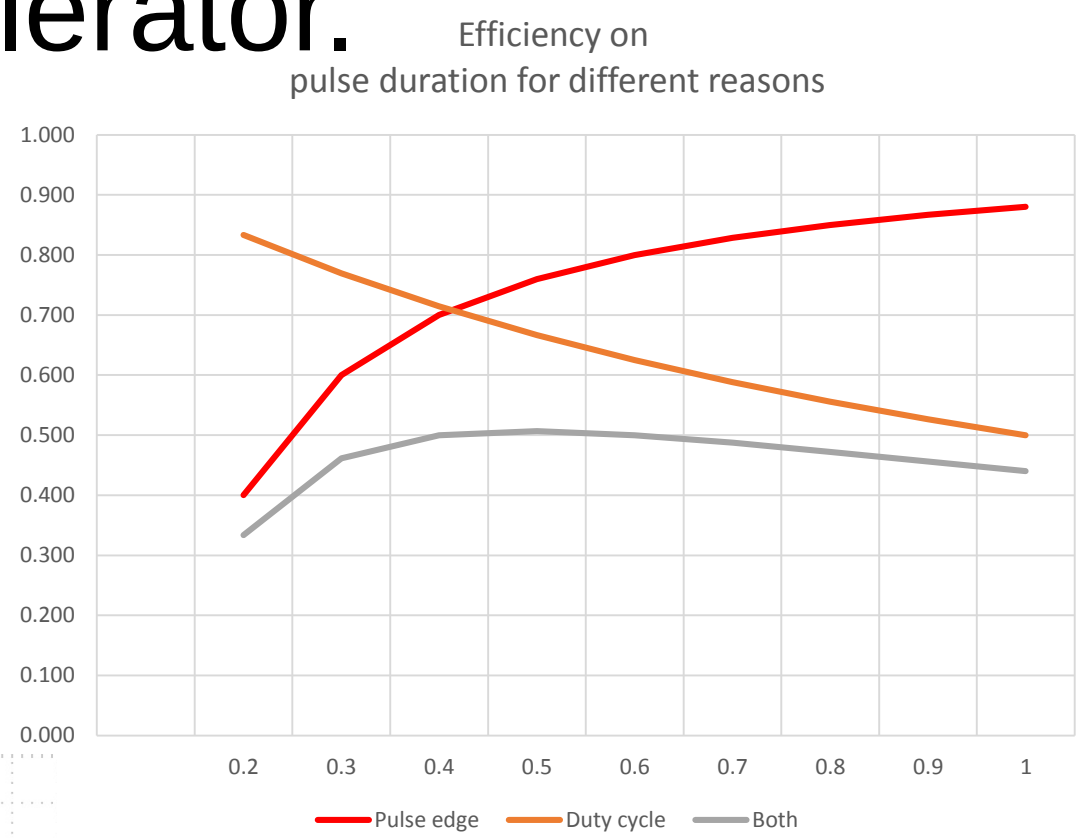


RF frequency 175 MHz

Accelerating structure with 6 cavities
4 RF-triodes – Σ8 MW of RF power

Duty cycle 2.5%
Pulse repetition rate 50 Hz
Pulse duration 500 mks
Pulse edge 50 mks

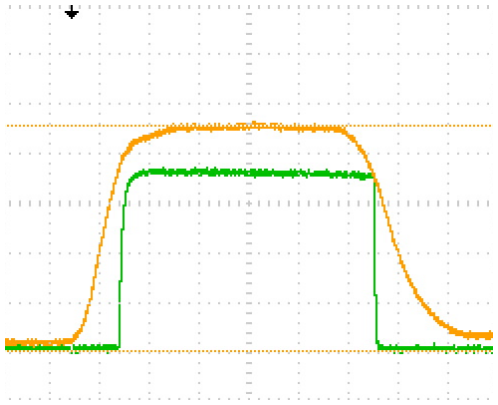

No need stainless vacuum tank.

# ILU-14 10 MeV 100 kW

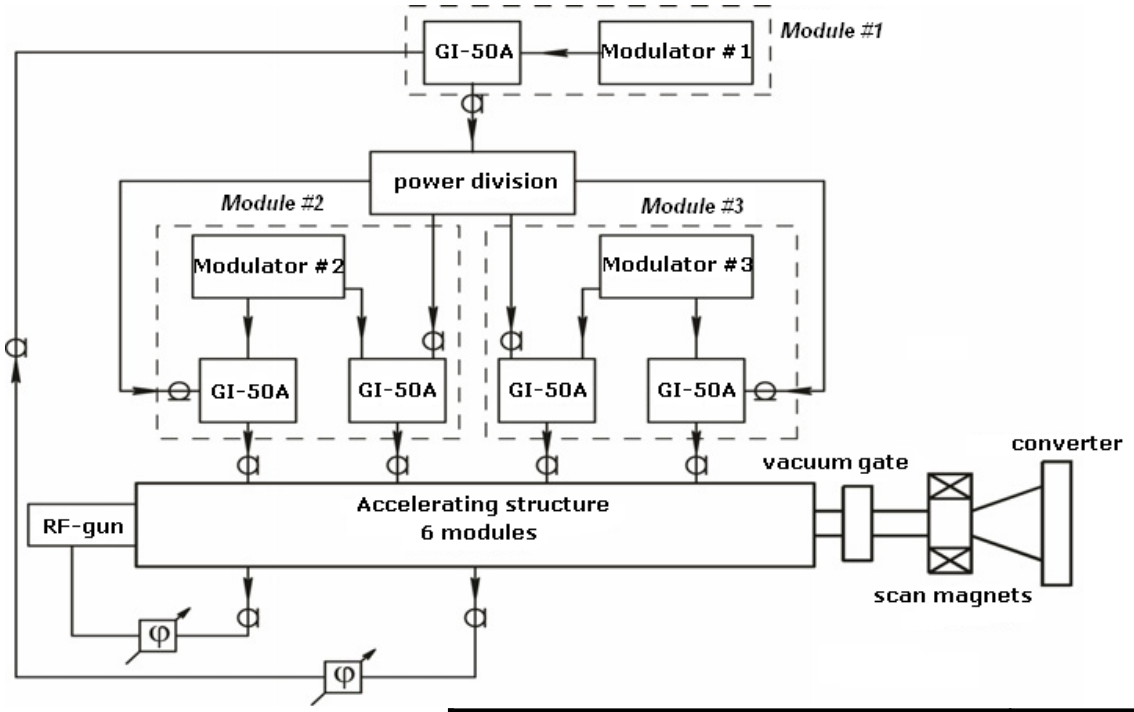


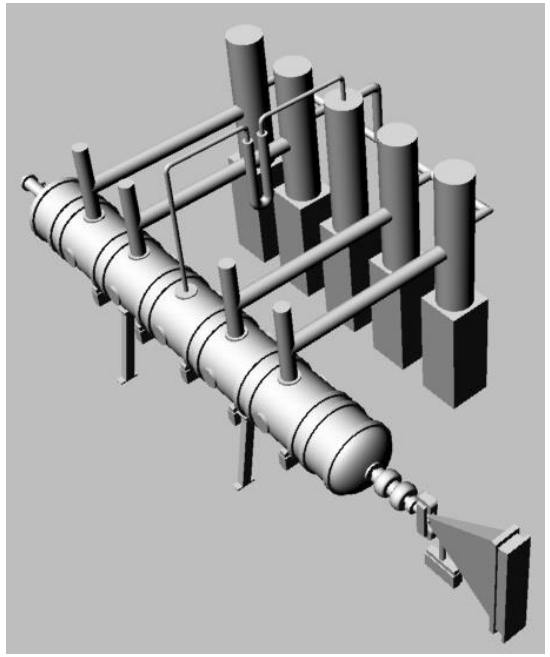

| | | | |
|---|---|---|---|
| *Operating frequency, MHz* | *176* | *Full efficiency, %* | *26* |
| *Electron energy, MeV* | *7,5-10* | *Modulator pulse duration, μs* | *500* |
| *Average beam power, kW* | *100* | *Repetition rate, Hz* | *Up to 50* |

# New multi-cavity ILU accelerator.

**In operation from 2014 in Moscow**

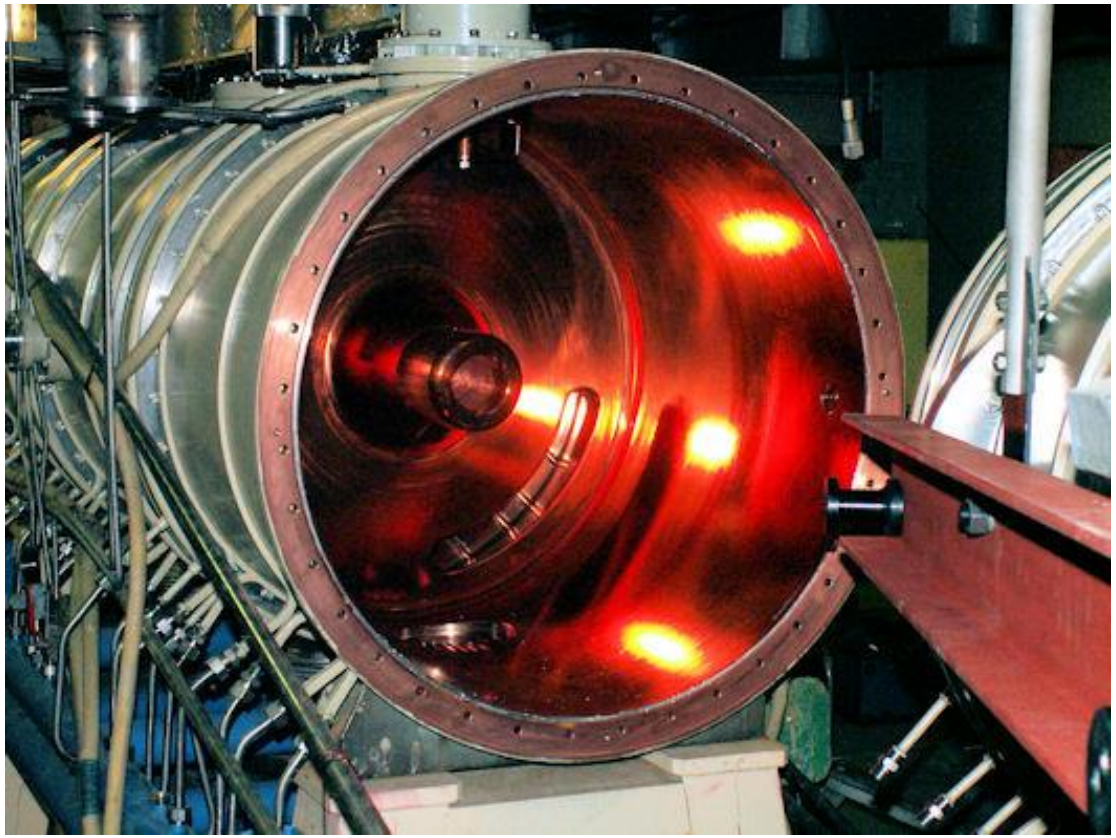

# Shorter version – ILU-12

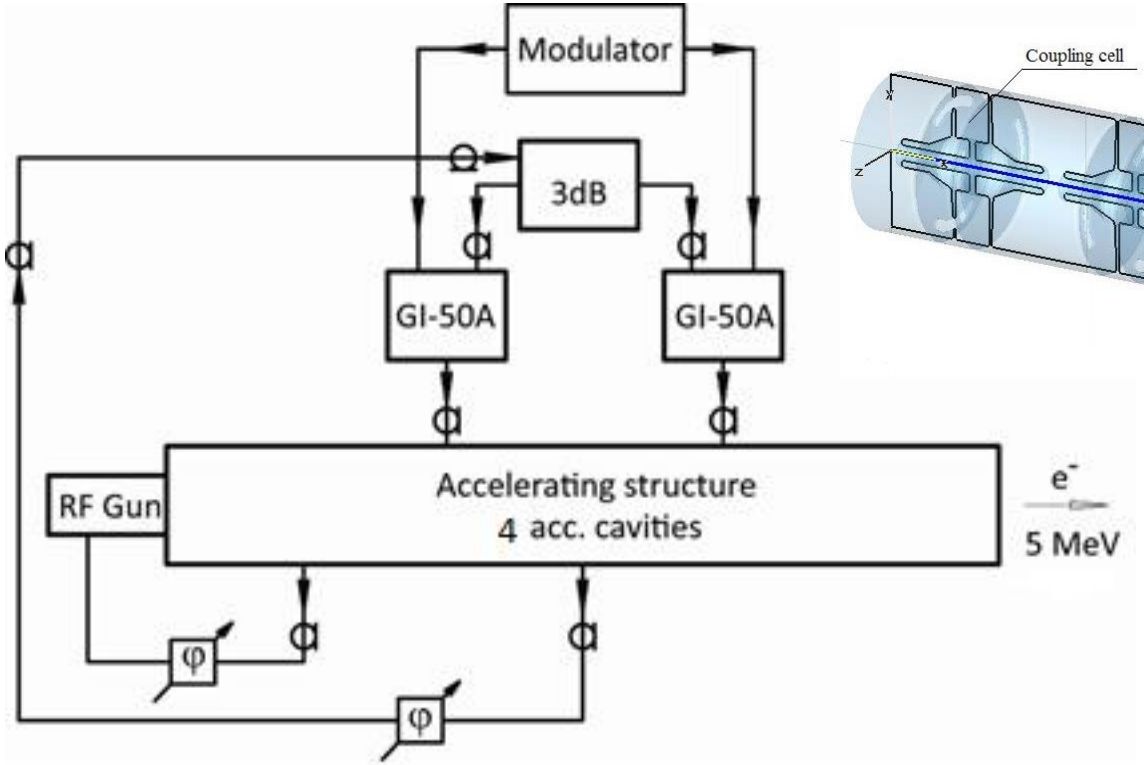


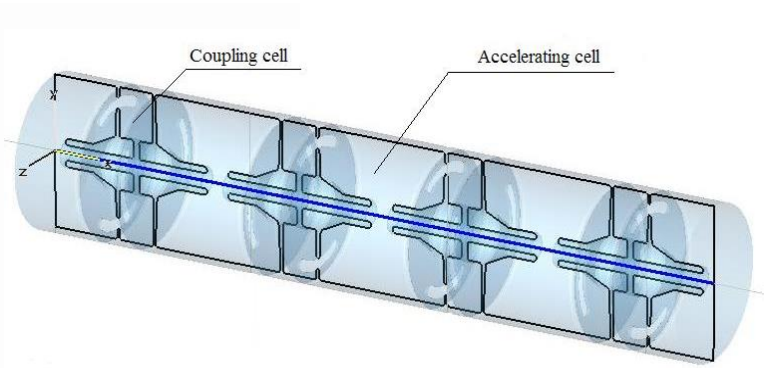


- 5 MeV 60 kW
- 7.5 MeV 40 kW
- 4 cavities
- Possible upgrade to ILU-14

# X-ray converter

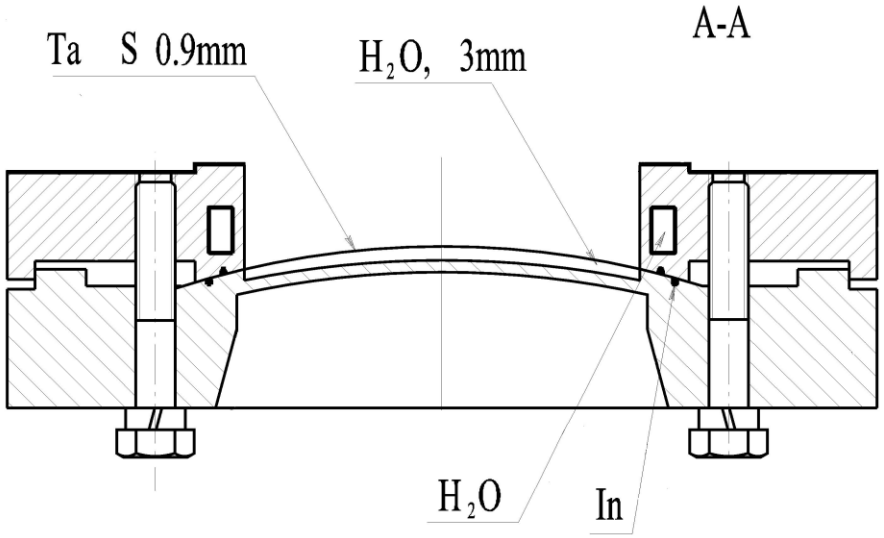


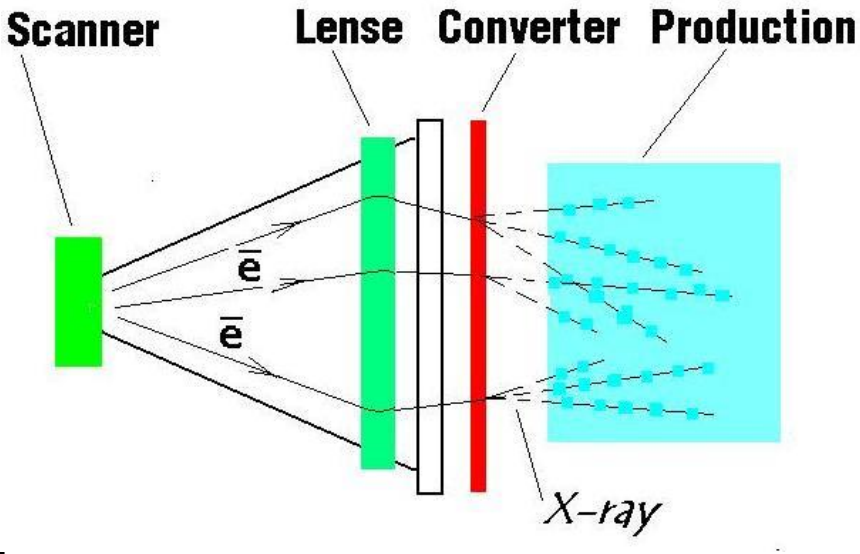


Conversion rate X/ray/Ebeam power

| E(MeV) | Ta thickness | 60 deg | 360 deg |
|---|---|---|---|
| 7.5 | 0.9 | 13,2% | 16,9 % |
| 5 | 0,7 | 8,3% | 12% |

# As conclusion – features of ILU accelerators

- RF generator with positive feedback – fast start of irradiation, soft requirements to cooling system
- Pulsed beam – High efficiency and multi-window beam extraction
- E-beam and X-ray mode – high profitability of e-beam allows compensate low profitability of X-ray
- Low RF frequency 100-200 MHz – not required high accuracy in manufacture of cavity

# Delivered ILU accelerators 2007-2017 (13 Pcs)

| Accelerator | Production | City, Country | Year of start |
|---|---|---|---|
| ILU-6 | Sterilization raw material (medecinal herbs) | Bisk, Russia | 2007 |
| ILU-8 2 Pcs | Wires crosslinking | Cheboksary, Russia | 2008, 2017 |
| ILU-10 | Plastic tubes crosslinking | Czluchow, Poland | 2008 |
| ILU-6 (Deep modernization) | Thermo-shrinkable tubes | Czluchow, Poland | 2010 |
| ILU-10, 2 Pcs | Sterilization | Novosibirsk, Russia | 2012, 2013 |
| ILU-10 | Sterilization | Kurchatov, Kazakhstan | 2013 |
| ILU-10M | R&D, food irradiation | BARC, Mumbai, India | 2014 |
| ILU-14 | Sterilization | Moscow, Russia | 2014 |
| ILU-10 | R&D, Sterilization | BINP, Novosibirsk, Russia | 2014 |
| ILU-8 | Wires crosslinking | Mytichi, Russia | 2016 |
| ILU-10 | Sterilization | Almaty, Kazakhstan | 2017(under construction) |
| ILU-10 | Sterilization | S.Korea | 2017 |

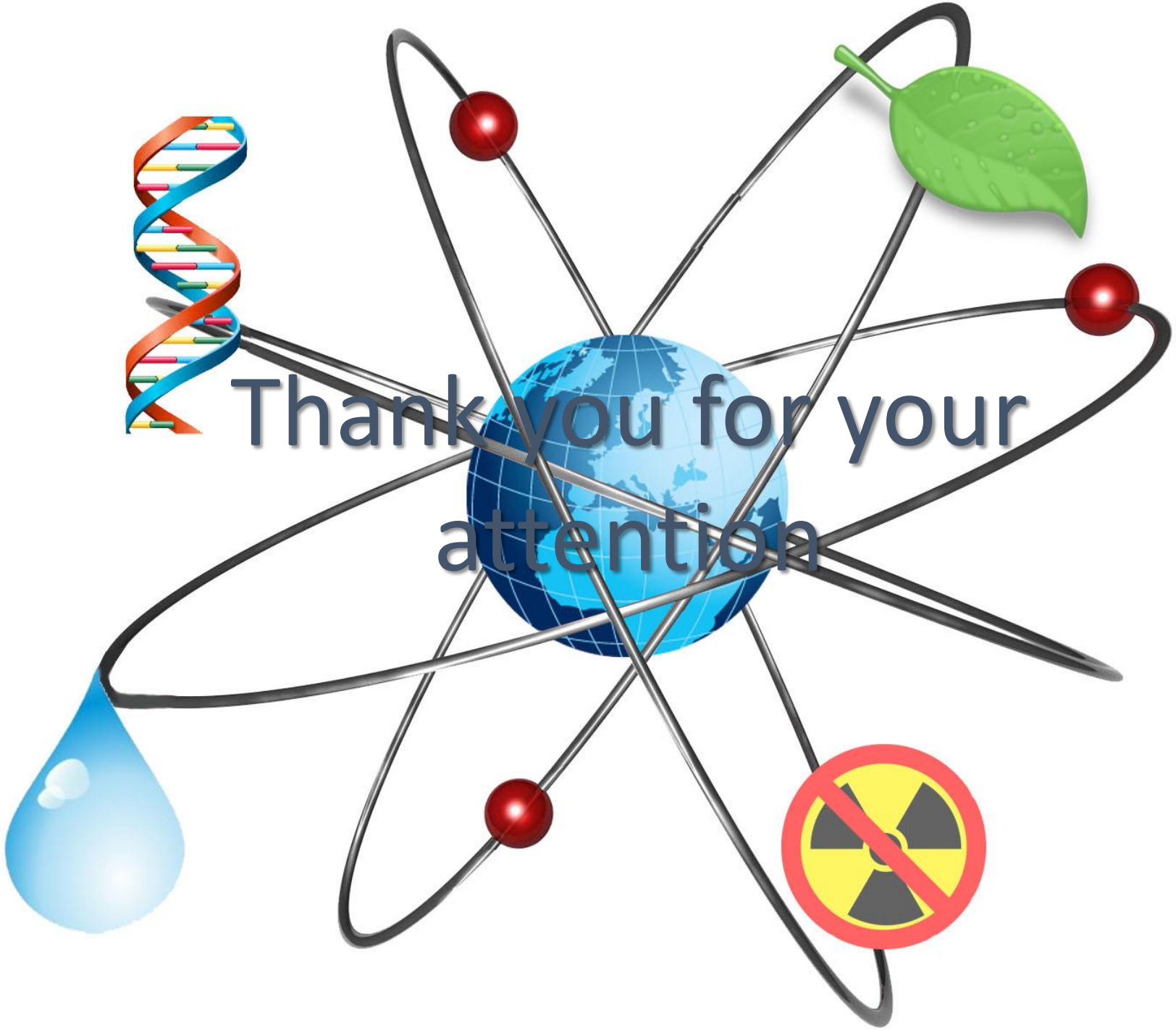

# Thank you for your attention