Weyl Symmetric SU(3) QCD Vacuum and Monopole Condensation

Y. M. Cho

School of Physics and Astronomy, Seoul National University, Seoul 08826
and
Center for Quantum Space-time, Sogang University, Seoul 04107
KOREA

July 5, 2018

Motivation and Plan

Millennium Problem: Mass Gap in QCD

1. What makes QCD so different from QED?
2. What is the QCD vacuum, and how does it make the confinement?
3. How can we generate the mass gap, and how do we verify this?
4. What are the observable consequences?

History

- Pauli first raised this issue pointing out the potential problems of the massless Yang-Mills theory.
- The problem is directly related to the creation of mass of the universe, because the visible universe is largely made of protons.
- Nambu and Mandelstam have conjectured the dual Meissner effect as the confinement mechanism. But proving this has been extremely difficult.

- Savvidy first calculated the effective action of SU(2) QCD, and has "almost" proved the magnetic condensation. Unfortunately the Savvidy vacuum was unstable. Worse, it was not gauge invariant.

- Since then there have been many attempts to cure the instability of the Savvidy vacuum, but none has been successful.

- The lattice QCD has been able to obtain the linear confining potential numerically, but unable to show what is the confinement mechanism.

Recent Progress

1. For the first time the lattice QCD calculation could pinpoint the monopole is responsible for the confinement gauge independently.

2. A new calculation of the QCD effective action which generates the stable monopole condensation and the dimensional transmutation was made.

Contents

A. Abelian Dominance

- 't Hooft conjectured the Abelian dominance. This must be true, since the non-Abelian (colored) part $\vec{X}_\mu$ should become the confined prisoner.

- The maximal Abelian gauge (MAG) condition $\hat{D}_\mu \vec{X}_\mu = 0$ has been used to separate the Abelian part, and the lattice QCD has successfully demonstrated the Abelian dominance with MAG.

- But this Abelian dominance has serious problems:

1. The MAG is ad hoc (i.e., gauge dependent). Worse, it does not determine the Abelian component.

2. It neglects the non-Abelian topology. In particular, it tells nothing about the monopole.

3. Most importantly, the Abelian dominance does not tell what is the confinement mechanism.

B. Abelian decomposition of SU(2) QCD

- Motivation

1. Proton is made of three quarks, but obviously it contains the binding gluons. However, the quark model tells that it has no valence gluons. If so, what is binding gluons inside the proton?

2. Abelian dominance asserts that only the Abelian part of the gluons is responsible for the confinement. But what is the Abelian part, and how do we separate it?

- Let $(\hat{n}_1, \hat{n}_2, \hat{n}_3 = \hat{n})$ be an orthonormal basis and $\hat{n}$ be the Abelian direction. Impose the isometry to obtain the restricted potential $\hat{A}_\mu$,

$$D_\mu \hat{n} = \partial_\mu \hat{n} + g\vec{A}_\mu \times \hat{n} = 0,$$

$$\vec{A}_\mu \to \hat{A}_\mu = A_\mu \hat{n} - \frac{1}{g}\hat{n} \times \partial_\mu \hat{n} = \mathcal{A}_\mu + \mathcal{C}_\mu,$$

$$\mathcal{A}_\mu = A_\mu \hat{n}, \quad \mathcal{C}_\mu = -\frac{1}{g}\hat{n} \times \partial_\mu \hat{n}, \quad A_\mu = \hat{n} \cdot \vec{A}_\mu.$$

$\hat{A}_\mu$ is Abelian, but has a dual structure. The topological (Diracian) $\mathcal{C}_\mu$ describes the non-Abelian monopole, but the non-topological (Maxwellian) $\mathcal{A}_\mu$ describes the neutral binding gluon (the neuron).

- Obtain the gauge independent Abelian decomposition

$$\vec{A}_\mu = \hat{A}_\mu + \vec{X}_\mu, \quad (\hat{n}\cdot\vec{X}_\mu = 0).$$
$$\vec{F}_{\mu\nu} = \hat{F}_{\mu\nu} + \hat{D}_\mu\vec{X}_\nu - \hat{D}_\nu\vec{X}_\mu + g\vec{X}_\mu\times\vec{X}_\nu,$$
$$\hat{F}_{\mu\nu} = \partial_\mu\hat{A}_\nu - \partial_\nu\hat{A}_\mu + g\hat{A}_\mu\times\hat{A}_\nu = (F_{\mu\nu} + H_{\mu\nu})\hat{n},$$
$$F_{\mu\nu} = \partial_\mu A_\nu - \partial_\nu A_\mu,\ H_{\mu\nu} = \partial_\mu\tilde{C}_\nu - \partial_\nu\tilde{C}_\mu,\ \tilde{C}_\mu = -\frac{1}{g}\hat{n}_1\cdot\partial_\mu\hat{n}_2.$$

- $\hat{A}_\mu$ has the full SU(2) gauge degrees of freedom, and $\vec{X}_\mu$ transforms covariantly and describes the colored valence gluon (the chromon).

Two Types of Gluons!

Restricted QCD (RCD)

- Define RCD which describes the Abelian sub-dynamics with $\hat{A}_\mu$,

$$\mathcal{L}_{RCD} = -\frac{1}{4}\hat{F}_{\mu\nu}{}^2 = -\frac{1}{4}(F_{\mu\nu} + H_{\mu\nu})^2$$
$$= -\frac{1}{4}F_{\mu\nu}^2 + \frac{1}{2g}F_{\mu\nu}\hat{n}\cdot(\partial_\mu\hat{n}\times\partial_\nu\hat{n}) - \frac{1}{4g^2}(\partial_\mu\hat{n}\times\partial_\nu\hat{n})^2.$$

It has the full SU(2) gauge symmetry yet is simpler than QCD, and has a dual structure with two potentials A_μ and $\tilde{C}_\mu$.

"Non-Abelian" Dirac theory

Extended QCD (ECD)

- Adding the chromon we have ECD

$$\mathcal{L}_{ECD} = -\frac{1}{4}\vec{F}_{\mu\nu}^2 = -\frac{1}{4}\hat{F}_{\mu\nu}^2$$
$$-\frac{1}{4}(\hat{D}_\mu\vec{X}_\nu - \hat{D}_\nu\vec{X}_\mu)^2 - \frac{g}{2}\hat{F}_{\mu\nu}\cdot(\vec{X}_\mu\times\vec{X}_\nu) - \frac{g^2}{4}(\vec{X}_\mu\times\vec{X}_\nu)^2.$$

1. QCD can be interpreted as RCD made of $\hat{A}_\mu$ which has the chromons $\vec{X}_\mu$ as colored source.
2. This puts QCD to the background field formalism, with $\hat{A}_\mu$ and $\vec{X}_\mu$ as classical background and quantum fluctuation.
3. $\hat{n}$ describes the topological, not dynamical, degree.

- ECD has the classical (background) gauge symmetry

$$\delta \hat{A}_\mu = \frac{1}{g}\hat{D}_\mu \vec{\alpha}, \quad \delta \vec{X}_\mu = -\vec{\alpha} \times \vec{X}_\mu,$$

as well as the quantum (fast) gauge symmetry

$$\delta \hat{A}_\mu = \frac{1}{g}(\hat{n} \cdot D_\mu \vec{\alpha})\hat{n}, \quad \delta \vec{X}_\mu = \frac{1}{g}\hat{n} \times (D_\mu \vec{\alpha} \times \hat{n}).$$

- Here the MAG $\hat{D}_\mu \vec{X}_\mu = 0$ becomes the quantum gauge condition which makes the chromons massless.

Vacuum Decomposition

- Imposing the vacuum isometry we have the most general vacuum classified by the vacuum topology $\Pi_3(S^3) \simeq \Pi_3(S^2)$ of $\hat{n}$

$$^{\forall_i}\ D_\mu \hat{n}_i = 0,$$

$$\vec{A}_\mu \to \hat{\Omega}_\mu = \Omega_\mu{}^k\ \hat{n}_k = \frac{1}{2g}\epsilon_{ij}{}^k\ (\hat{n}_i \cdot \partial_\mu \hat{n}_j)\ \hat{n}_k.$$

$$\vec{A}_\mu = \hat{A}_\mu + \vec{X}_\mu = \hat{\Omega}_\mu + \vec{Z}_\mu, \quad \vec{Z}_\mu = \vec{B}_\mu + \vec{X}_\mu.$$

- So $\hat{n}$ selects the Abelian direction, defines the monopole topology $\Pi_2(S^2)$, and describes the vacuum topology $\Pi_3(S^2)$, all gauge independently.

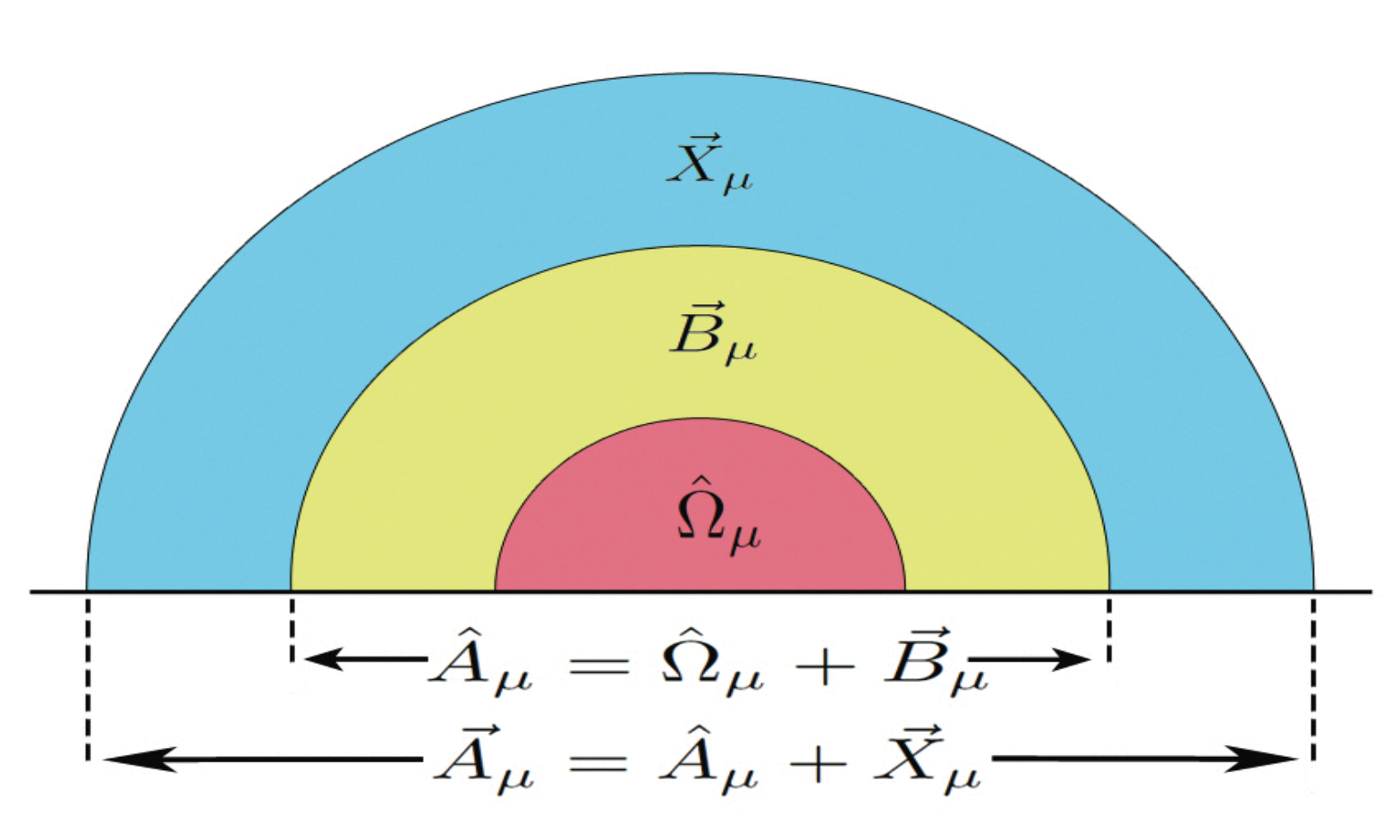

Figure : The affine structure of non-Abelian connection space: It has two proper subspaces $\hat{A}_\mu$ and $\hat{\Omega}_\mu$ which form their own non-Abelian connection spaces. Moreover, $\hat{A}_\mu$ has a dual structure.

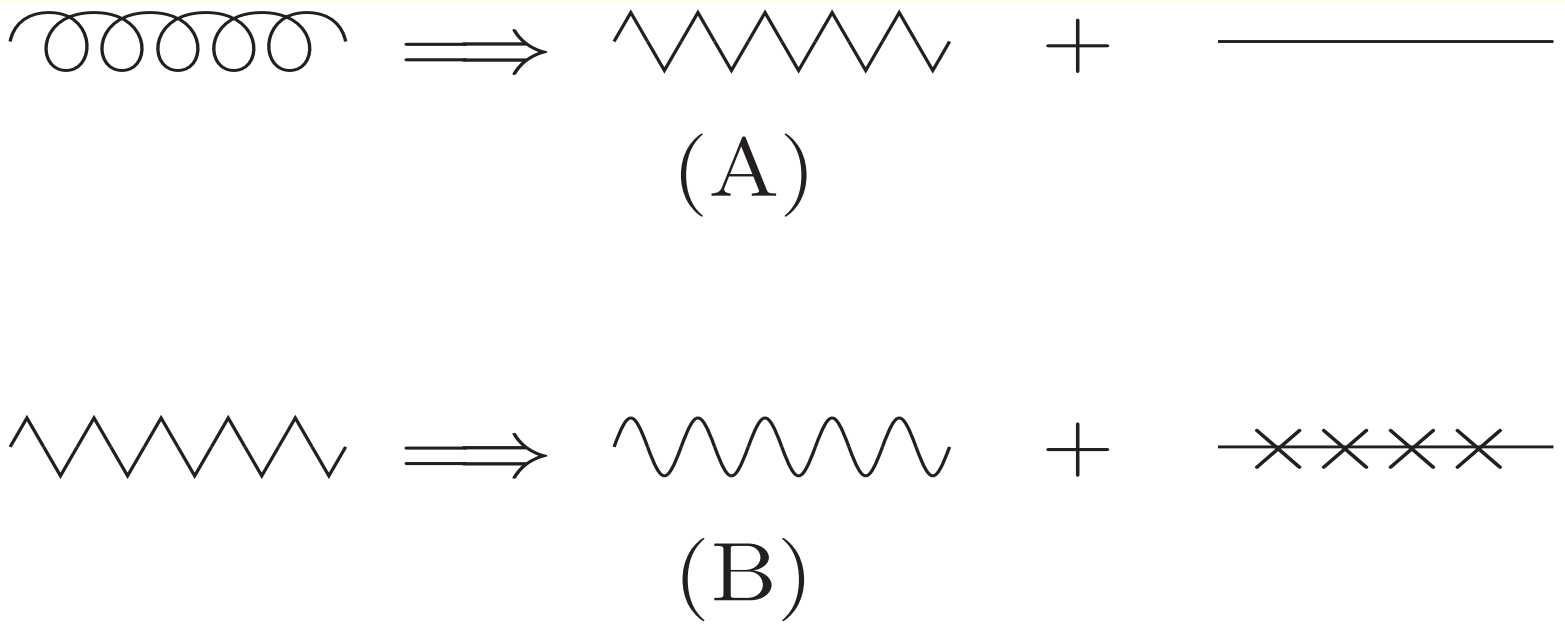

Figure : The gauge independent Abelian decomposition of QCD potential. (A) decomposes it to the restricted part and the chromon, and (B) decomposes the restricted part to the neuron and monopole.

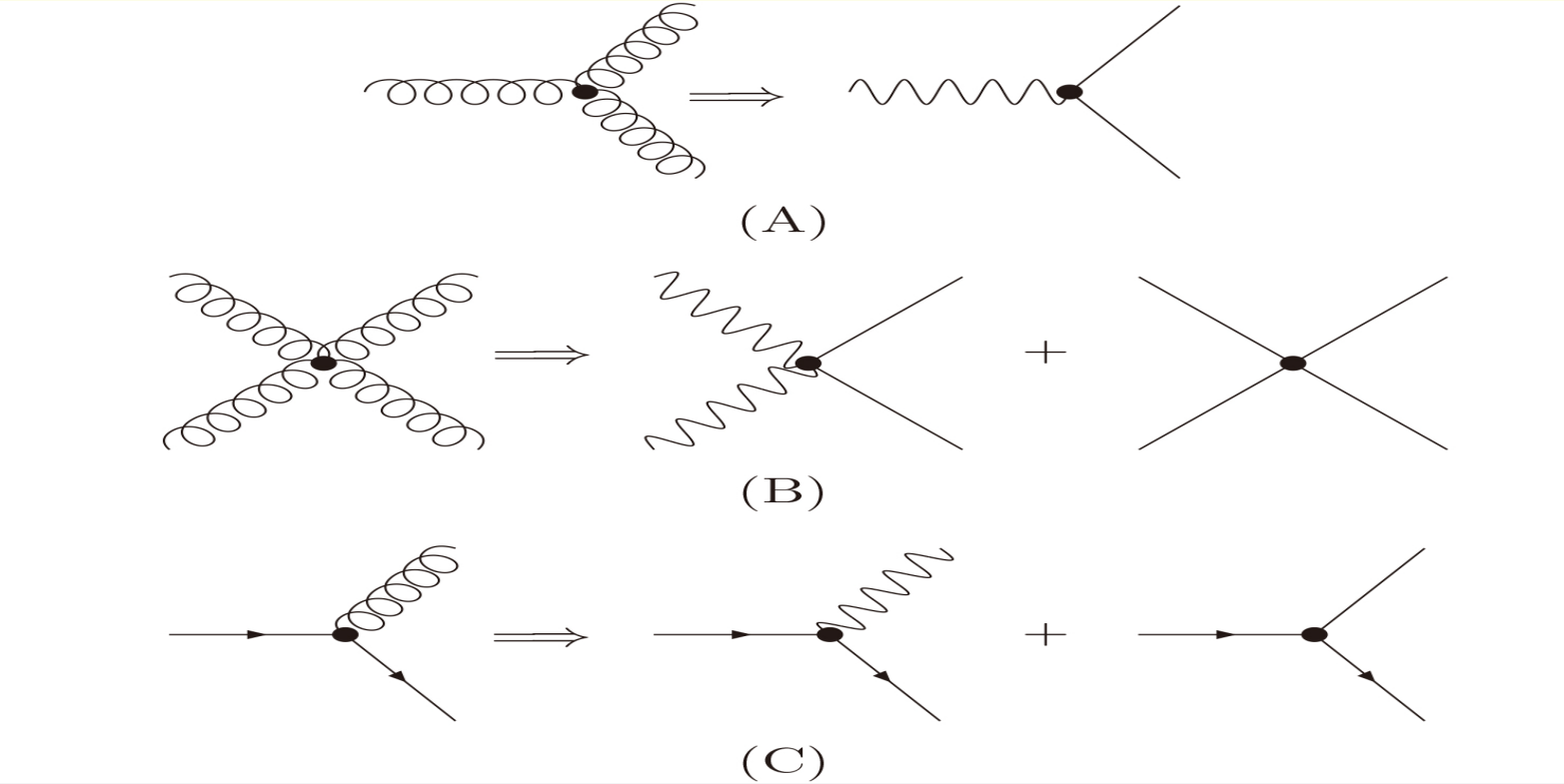

Figure : The decomposition of the Feynman diagrams in SU(2) QCD. The three-point and four-point gluon vertices are decomposed in (A) and (B), and the quark-gluon verteces are decomposed in (C). The monopole does not appear in the diagram since it is not a propagating degree.

C. SU(3) QCD

- Since the SU(3) QCD has two Abelian directions, the Abelian projection is given by two magnetic symmetries,

$$D_\mu \hat{n} = 0, \qquad D_\mu \hat{n}' = 0, \qquad (\hat{n}^2 = \hat{n}'^2 = 1)$$

where $\hat{n}$ and $\hat{n}' = \hat{n} * \hat{n}$ are λ_3-like and λ_8-like octet unit vectors.

- With this we have the following Abelian decomposition,

$$\vec{A}_\mu = \hat{A}_\mu + \vec{X}_\mu, \quad \hat{A}_\mu = A_\mu \hat{n} + A'_\mu \hat{n}' - \frac{1}{g}(\hat{n} \times \partial_\mu \hat{n} + \hat{n}' \times \partial_\mu \hat{n}')$$

$$A_\mu = \hat{n} \cdot \vec{A}_\mu, \quad A'_\mu = \hat{n}' \cdot \vec{A}_\mu, \quad \hat{n} \cdot \vec{X}_\mu = \hat{n}' \cdot \vec{X}_\mu = 0.$$

- $\hat{A}_\mu$ can be expressed by the three neurons of SU(2) subgroups

$$\hat{A}_\mu = \sum_p \frac{2}{3}\hat{A}^p_\mu, \quad (p = 1, 2, 3),$$

$$\hat{A}^p_\mu = A^p_\mu \hat{n}^p - \frac{1}{g}\hat{n}^p \times \partial_\mu \hat{n}^p = \mathcal{A}^p_\mu + \mathcal{C}^p_\mu,$$

$$A^1_\mu = A_\mu, \quad A^2_\mu = -\frac{1}{2}A_\mu + \frac{\sqrt{3}}{2}A'_\mu, \quad A^3_\mu = -\frac{1}{2}A_\mu - \frac{\sqrt{3}}{2}A'_\mu,$$

$$\hat{n}^1 = \hat{n}, \quad \hat{n}^2 = -\frac{1}{2}\hat{n} + \frac{\sqrt{3}}{2}\hat{n}', \quad \hat{n}^3 = -\frac{1}{2}\hat{n} - \frac{\sqrt{3}}{2}\hat{n}'.$$

- With this we have the Abelian decomposition of SU(3) QCD,

$$\vec{A}_\mu = \hat{A}_\mu + \vec{X}_\mu = \sum_p (\frac{2}{3}\hat{A}^p_\mu + \vec{W}^p_\mu), \quad \vec{X}_\mu = \sum_p \vec{W}^p_\mu,$$
$$\vec{W}^1_\mu = X^1_\mu \hat{n}_1 + X^2_\mu \hat{n}_2,\ \vec{W}^2_\mu = X^6_\mu \hat{n}_6 + X^7_\mu \hat{n}_7,\ \vec{W}^3_\mu = X^4_\mu \hat{n}_4 + X^5_\mu \hat{n}_5.$$

- $\vec{W}^p_\mu$ can be expressed by red, blue, and green chromons of SU(2) subgroups (R_μ, B_μ, G_μ),

$$R_\mu = \frac{X^1_\mu + iX^2_\mu}{\sqrt{2}},\ B_\mu = \frac{X^6_\mu + iX^7_\mu}{\sqrt{2}},\ G_\mu = \frac{X^4_\mu + iX^5_\mu}{\sqrt{2}}.$$

But unlike $\hat{A}^p_\mu$, they are mutually independent.

- From this we have the Weyl symmetric SU(3) RCD and ECD

$$\mathcal{L}_{RCD} = -\sum_p \frac{1}{6}(\hat{F}^p_{\mu\nu})^2,$$

$$\mathcal{L}_{ECD} = -\sum_p \left\{\frac{1}{6}(\hat{F}^p_{\mu\nu})^2 + \frac{1}{4}(\hat{D}^p_\mu \vec{W}^p_\nu - \hat{D}^p_\nu \vec{W}^p_\mu)^2 + \frac{g}{2}\hat{F}^p_{\mu\nu}\cdot(\vec{W}^p_\mu \times \vec{W}^p_\nu)\right\} - \sum_{p,q}\frac{g^2}{4}(\vec{W}^p_\mu \times \vec{W}^q_\mu)^2 - \sum_{p,q,r}\frac{g}{2}(\hat{D}^p_\mu \vec{W}^p_\nu - \hat{D}^p_\nu \vec{W}^p_\mu)\cdot(\vec{W}^q_\mu \times \vec{W}^r_\mu) - \sum_{p\neq q}\frac{g^2}{4}\left[(\vec{W}^p_\mu \times \vec{W}^q_\nu)\cdot(\vec{W}^q_\mu \times \vec{W}^p_\nu) + (\vec{W}^p_\mu \times \vec{W}^p_\nu)\cdot(\vec{W}^q_\mu \times \vec{W}^q_\nu)\right].$$

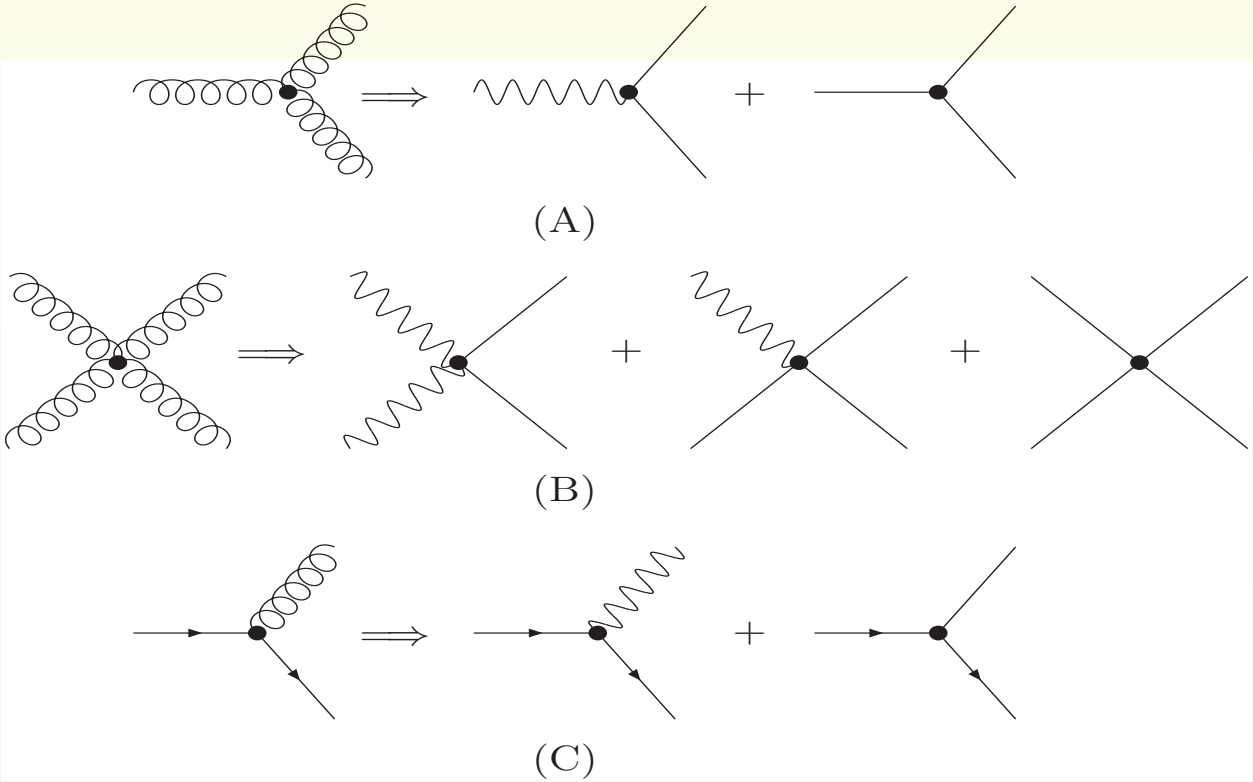

Figure : The Abelian decomposition of Feynman diagrams in SU(3) QCD.

D. Monopole Dominance

- Implementing the Abelian decomposition on lattice, we can demonstrates that the monopole is responsible for the confinement.
- Theoretically we can show that the monopole potential makes the confining potential in the Wilson loop integral.
- But this does not tell how the monopole confines the color.

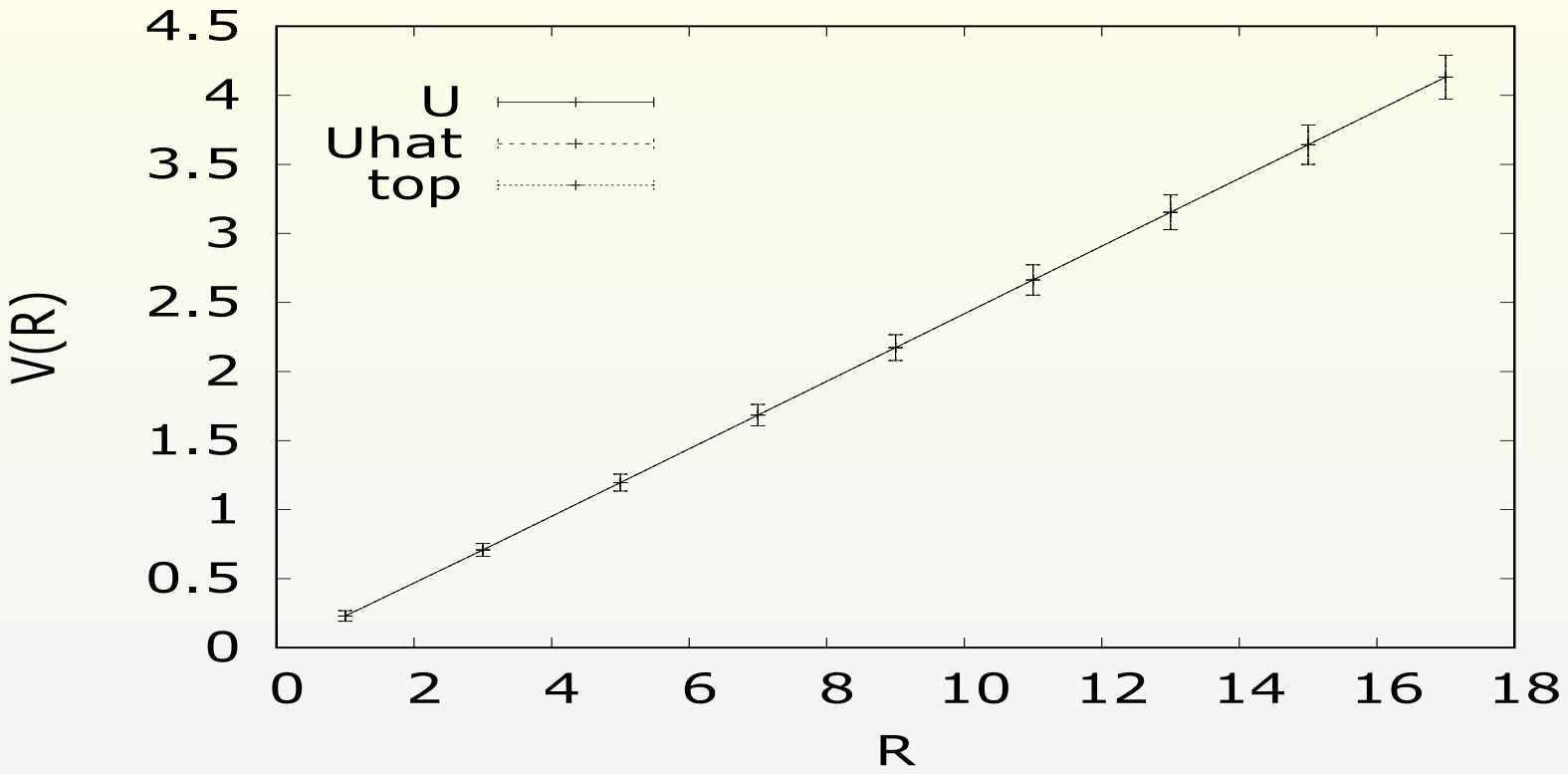

Figure : The Abelian dominance versus the monopole dominance in the lattice calculation. Here (U, Uhat, top) represent the full, Abelian, and monopole potentials.

- In summary, the Abelian decomposition does not change QCD, but reveals important hidden structures:

  1. Pertubatively it decomposes the Feynman diagram which makes the color conservation explicit, and generalizes the quark model to the quark and chromon model.

  2. Non-pertubatively it provides an ideal platform for us to calculate the QCD effective action, and prove the monopole condensation.

  3. In particular, it reveals the existence of the gauge invariant monopole background, and reduces the gauge symmetry to the discrete color reflection symmetry.

Color Reflection Invariance

A. Color Reflction Symmetry (CRS)

- Fixing $\hat{n}$ breaks the gauge symmetry. But there exists the residual symmetry, the color reflection symmetry, which plays the role of the non-Abelian gauge symmetry.

- Under the color reflection $(\hat{n}_1, \hat{n}_2, \hat{n}) \to (-\hat{n}_1, \hat{n}_2, -\hat{n})$ the isometry condition $D_\mu \hat{n} = 0$ does not change, but $\hat{A}_\mu$ and $\vec{X}_\mu$ change,

$$\hat{A}_\mu \to \hat{A}_\mu^{(c)} = -A_\mu \hat{n} - \frac{1}{g}\hat{n} \times \partial_\mu \hat{n} = -\mathcal{A}_\mu + \mathcal{C}_\mu,$$
$$\vec{X}_\mu \to \vec{X}_\mu^{(c)} = -X_\mu^1\, \hat{n}_1 + X_\mu^2\, \hat{n}_2.$$

- So we have two different Abelian decompositions with the same isometry

$$\vec{A}_\mu = \hat{A}_\mu + \vec{X}_\mu, \qquad \vec{A}_\mu = \hat{A}^{(c)}_\mu + \vec{X}^{(c)}_\mu.$$

- This has deep implication which makes QCD fundamentally different from QED.

1. The monopole becomes an ideal candidate of QCD vacuum.
2. The chromon and anti-chromon always come in pair and play exactly the same amount of role in QCD.

- For SU(3) QCD the color reflection group is made of 24 elements given by

$$C_{ab} = D_a R_b,$$

$$(a = 1, 2, 3, 4; b = 1, 2, ..., 6)$$

$$D_1 = \begin{pmatrix} 1 & 0 & 0 \\ 0 & 1 & 0 \\ 0 & 0 & 1 \end{pmatrix}, \quad D_2 = \begin{pmatrix} -1 & 0 & 0 \\ 0 & -1 & 0 \\ 0 & 0 & 1 \end{pmatrix},$$

$$D_3 = \begin{pmatrix} 1 & 0 & 0 \\ 0 & -1 & 0 \\ 0 & 0 & -1 \end{pmatrix}, D_4 = \begin{pmatrix} -1 & 0 & 0 \\ 0 & 1 & 0 \\ 0 & 0 & -1 \end{pmatrix},$$

$$R_1 = \begin{pmatrix} 1 & 0 & 0 \\ 0 & 1 & 0 \\ 0 & 0 & 1 \end{pmatrix}, \quad R_2 = \begin{pmatrix} 0 & 1 & 0 \\ -1 & 0 & 0 \\ 0 & 0 & 1 \end{pmatrix},$$

$$R_3 = \begin{pmatrix} 1 & 0 & 0 \\ 0 & 0 & 1 \\ 0 & -1 & 0 \end{pmatrix}, \quad R_4 = \begin{pmatrix} 0 & 0 & 1 \\ 0 & -1 & 0 \\ 1 & 0 & 0 \end{pmatrix},$$

$$R_5 = \begin{pmatrix} 0 & 1 & 0 \\ 0 & 0 & 1 \\ 1 & 0 & 0 \end{pmatrix}, \quad R_6 = \begin{pmatrix} 0 & 0 & 1 \\ -1 & 0 & 0 \\ 0 & -1 & 0 \end{pmatrix},$$

where the four D-matrices form the diagonal subgroup.

B. Decomposition of Gluon Octet

- The neuron and chromon transform separately under CRS. The neuron triplet $(A^1_\mu, A^1_\mu, A^3_\mu)$ has no anti-neuron partner, and transforms as follows

$$
\begin{aligned}
R_2: &\quad (A^1_\mu, A^2_\mu, A^3_\mu) \to -(A^1_\mu, A^3_\mu, A^2_\mu),\\
R_3: &\quad (A^1_\mu, A^2_\mu, A^3_\mu) \to -(A^3_\mu, A^2_\mu, A^1_\mu),\\
R_4: &\quad (A^1_\mu, A^2_\mu, A^3_\mu) \to -(A^2_\mu, A^1_\mu, A^3_\mu),\\
R_5: &\quad (A^1_\mu, A^2_\mu, A^3_\mu) \to \quad (A^3_\mu, A^1_\mu, A^2_\mu),\\
R_6: &\quad (A^1_\mu, A^2_\mu, A^3_\mu) \to \quad (A^2_\mu, A^3_\mu, A^1_\mu).
\end{aligned}
$$

- The chromon sextet $(R_\mu, B_\mu, G_\mu, \bar{R}_\mu, \bar{B}_\mu, \bar{G}_\mu)$ has the anti-chromon partner, and transforms as follows

$$
\begin{aligned}
R_2 &: (R_\mu, B_\mu, G_\mu, \bar{R}_\mu, \bar{B}_\mu, \bar{G}_\mu) \to \quad (\bar{R}_\mu, \bar{G}_\mu, \bar{B}_\mu, R_\mu, G_\mu, B_\mu), \\
R_3 &: (R_\mu, B_\mu, G_\mu, \bar{R}_\mu, \bar{B}_\mu, \bar{G}_\mu) \to -(\bar{G}_\mu, \bar{B}_\mu, \bar{R}_\mu, G_\mu, B_\mu, R_\mu), \\
R_4 &: (R_\mu, B_\mu, G_\mu, \bar{R}_\mu, \bar{B}_\mu, \bar{G}_\mu) \to -(\bar{B}_\mu, \bar{R}_\mu, \bar{G}_\mu, B_\mu, R_\mu, G_\mu), \\
R_5 &: (R_\mu, B_\mu, G_\mu, \bar{R}_\mu, \bar{B}_\mu, \bar{G}_\mu) \to -(G_\mu, R_\mu, B_\mu, \bar{G}_\mu, \bar{R}_\mu, \bar{B}_\mu), \\
R_6 &: (R_\mu, B_\mu, G_\mu, \bar{R}_\mu, \bar{B}_\mu, \bar{G}_\mu) \to -(B_\mu, G_\mu, R_\mu, \bar{B}_\mu, \bar{G}_\mu, \bar{R}_\mu).
\end{aligned}
$$

- So the color reflection invariant combination of neuron triplet and chromon sextet of CRS, not the gluon octet, become the physical states.

Quark and Chromon Model

A. Savvidy Action of SU(2) QCD: A Review

- Savvidy calculated the one-loop effective action of SU(2) QCD, integrating out gluons in a constant magnetic background,

$$\hat{F}^{(b)}_{\mu\nu} = \bar{F}_{\mu\nu}\hat{n}_0, \quad \bar{F}_{\mu\nu} = H\delta^1_{[\mu}\delta^2_{\nu]},$$

  where $\hat{n}_0 = (0, 0, 1)$ is the Abelian direction and H is a constant chromomagnetic field in z-direction.

- But the separation of the classical and quantum parts is ad hoc, and the background is not gauge invariant nor parity conserving.

- The energy of the gluon in the magnetic background is given by

$$\mathcal{E} = 2gH(n + \frac{1}{2} - qS_3) + k^2,$$

where $q = \pm 1,\ S_3 = \pm 1$ and k are the color, spin, and momentum of the gluon in z-direction. Notice that for both $q = \pm 1$ the spectrum has negative eigenvalues.

- In this case the gluon and ghost loop functional determinants are given by

$$\ln \text{Det}^{1/2}\ K = \ln \text{Det}\ [(-\hat{D}^2 + 2gH)(-\hat{D}^2 - 2gH)],$$
$$\ln \text{Det}\ M_{FP} = 2\ \ln \text{Det}\ (-\hat{D}^2).$$

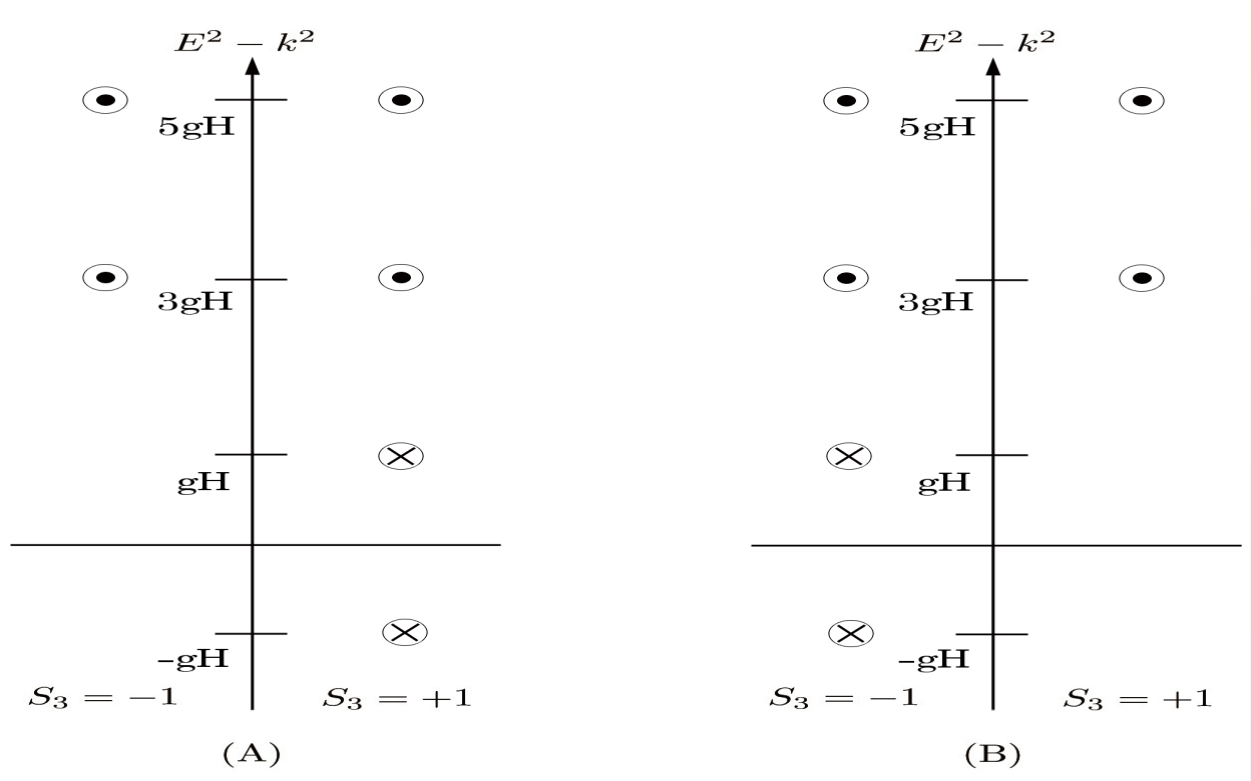

Figure : The energy of colored gluon bound states in the magnetic background. Here (A) and (B) represent the bound states of gluon which have opposite color charge ($q = \pm 1$).

- With this one has

$$\Delta S = i \ \ln \ \mathrm{Det} \ [(-\hat{D}^2 + 2gH)(-\hat{D}^2 - 2gH)]$$
$$-2i \ \ln \ \mathrm{Det} \ (-\hat{D}^2),$$

$$\Delta\mathcal{L} = \frac{1}{16\pi^2}\int_0^\infty \frac{dt}{t^{3-\epsilon}} \frac{gHt/\mu^2}{\sinh(gHt/\mu^2)}$$
$$\times\Big[\exp(-2gHt/\mu^2)+\exp(+2gHt/\mu^2)-1\Big].$$

Infra-red Divergence

- Instability of Savvidy Vacuum: With the ζ-function regularization we obtain the Savvidy-Nielsen-Olesen (SNO) effective potential which contains the well-known imaginary part,

$$V_{SNO} = \frac{H^2}{2}\Big[1 + \frac{11g^2}{24\pi^2}\big(\ln\frac{H}{\mu^2} - c\big)\Big] + i\frac{g^2H^2}{8\pi}.$$

  Obviously this destabilizes the magnetic condensation.

- Clearly the tachyonic modes of the functional determinant causes the SNO instability.

B. C-projection and Gauge Invariant Effective Action

- There are two critical mistakes in the old calculation:
  1. Savvidy background was not gauge invariant nor parity conserving.
  2. The gluon loop integral was not gauge invariant.

- To remove these defects, we need the followings.
  1. Choose the color reflection invariant and parity conserving monopole background

$$\hat{F}^{(b)}_{\mu\nu} = \bar{H}_{\mu\nu}\hat{n}, \quad \bar{H}_{\mu\nu} = H\delta^1_{[\mu}\delta^2_{\nu]}.$$

  2. Integrate out the chromon pair $\vec{X}_\mu$ and $\vec{X}^{(c)}_\mu$ simultaneously, imposing the color reflection invariance.

- Adopting the quantum gauge condition $\bar{D}_\mu \vec{X}_\mu = 0$ we have

$$\exp\left[iS_{eff}(\hat{A}_\mu)\right] \simeq \int \mathcal{D}\vec{X}_\mu \mathcal{D}\vec{X}_\mu^{(c)} \mathcal{D}\vec{c}\mathcal{D}\vec{c}^*$$

$$\exp\Big\{ -i\int \Big[\frac{1}{4}\hat{F}_{\mu\nu}^2 + \frac{1}{4}(\hat{D}_\mu \vec{X}_\nu - \hat{D}_\nu \vec{X}_\mu)^2 + \frac{g}{2}\hat{F}_{\mu\nu}\cdot(\vec{X}_\mu \times \vec{X}_\nu)$$

$$+\vec{c}^* \bar{D}_\mu D_\mu \vec{c} + \frac{1}{2\xi}(\bar{D}_\mu \vec{X}_\mu)^2\Big] d^4x \Big\},$$

where $\vec{c}$ and $\vec{c}^*$ are the ghost fields.

- Under the color reflection q changes the signature, but the spin does not change. So the energy eigenvalues change to

$$2gH(n + \frac{1}{2} \mp S_3) + k^2 \to 2gH(n + \frac{1}{2} \pm S_3) + k^2.$$

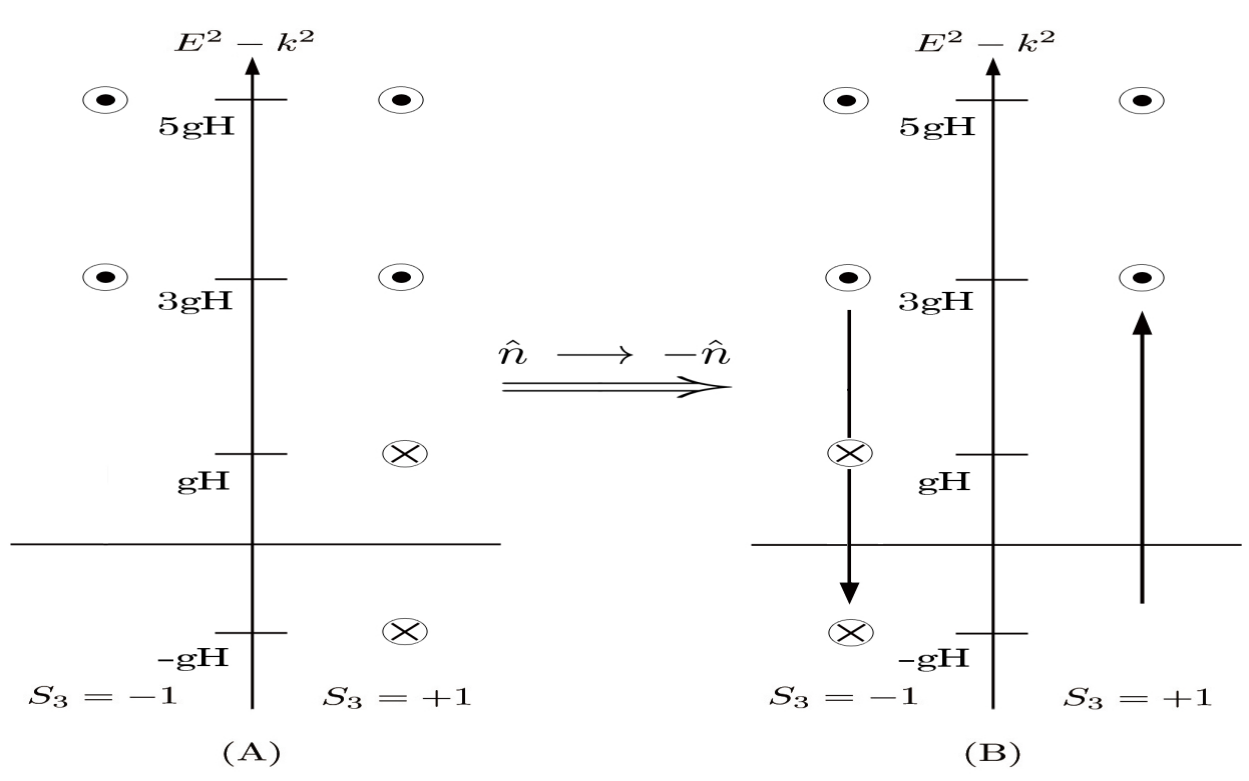

Figure : The gauge invariant eigenvalues of the chromon functional determinant. Notice that the C-projection excludes the lowest two eigenmodes, in particular the tachyonic modes.

- So we must make the C-projection which excludes the lowest two eigenmodes. With this we have

$$\ln \mathrm{Det}^{1/2}\ K = \ln \mathrm{Det}\ [(-\hat{D}^2 + 2gH)(-\hat{D}^2 + 2gH)],$$
$$\Delta\mathcal{L} = \frac{1}{16\pi^2}\int_0^\infty \frac{dt}{t^{3-\epsilon}} \frac{gHt/\mu^2}{\sinh(gHt/\mu^2)}$$
$$\times\Big[\exp(-2gHt/\mu^2)+\exp(-2gHt/\mu^2)-1\Big].$$

- Just like the GSO-projection which removes tachyons and assures supersymmetry and modular invariance in string theory, the C-projection removes the tachyonic modes and restores the stability of the monopole condensation in QCD.

No Infra-red Divergence!

C. Monopole Condensation and Asymptotic Freedom

- With the C-projection the effective potential becomes real

$$V = \frac{H^2}{2}\Big[1 + \frac{11g^2}{24\pi^2}\big(\ln\frac{gH}{\mu^2} - c\big)\Big].$$

- Define the running coupling $\bar{g}$ by $\left.\frac{\partial^2 V}{\partial H^2}\right|_{H=\bar{\mu}^2} = \frac{g^2}{\bar{g}^2}$ and find

$$\frac{1}{\bar{g}^2} = \frac{1}{g^2} + \frac{11}{24\pi^2}\big(\ln\frac{\bar{\mu}^2}{\mu^2} - c + \frac{3}{2}\big), \quad \beta(\bar{\mu}) = \bar{\mu}\frac{\partial\bar{g}}{\partial\bar{\mu}} = -\frac{11\bar{g}^3}{24\pi^2}.$$

Asymptotic Freedom

- Find the renormalized potential which has the non-trivial minimum

$$V_{ren} = \frac{H^2}{2}\Big[1 + \frac{11\bar{g}^2}{24\pi^2}\big(\ln\frac{H}{\bar{\mu}^2} - \frac{3}{2}\big)\Big],$$

$$\langle H\rangle = \bar{\mu}^2 \exp\Big(-\frac{24\pi^2}{11\bar{g}^2} + 1\Big).$$

This is the Savvidy potential without the imaginary part.

Dynamical Symmetry Breaking!

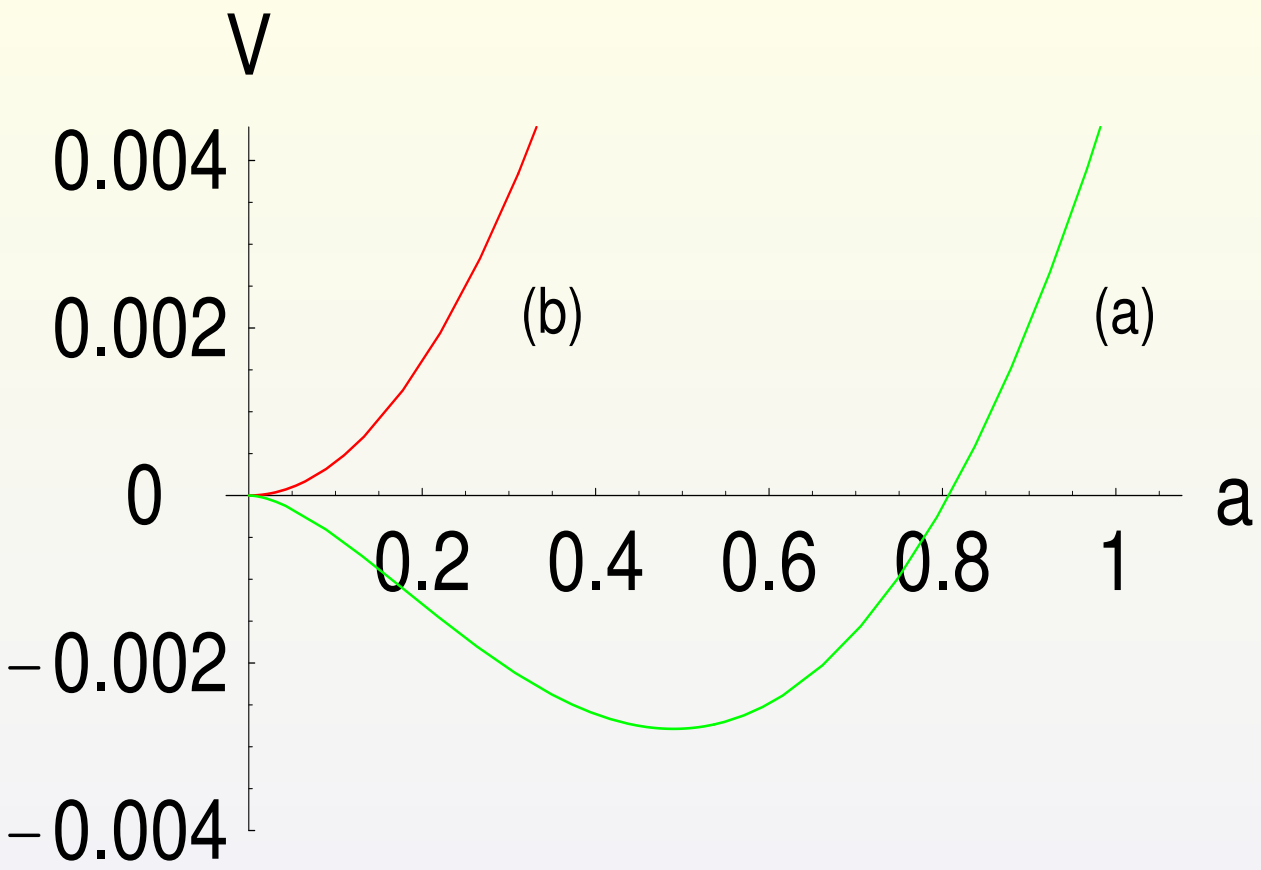

Figure : The one-loop effective potential of SU(2) QCD. Here (a) and (b) represent the effective potential and the classical potential.

- In general for arbitray constant monopole background $\bar{H}_{\mu\nu}$ we find

$$\mathcal{L}_{eff} = \begin{cases} -\dfrac{H^2}{2} - \dfrac{11g^2H^2}{48\pi^2}\Big(\ln\dfrac{gH}{\mu^2} - c\Big), & E = 0 \\ -\dfrac{E^2}{2} + \dfrac{11g^2E^2}{48\pi^2}\Big(\ln\dfrac{gE}{\mu^2} - c\Big) - i\dfrac{11g^2E^2}{96\pi}, & H = 0 \end{cases}$$

$$c = 1 - \ln\,2 - \frac{24}{11}\zeta'(-1, \frac{3}{2}) = 0.94556...$$

- The effective action is invariant under the dual transformation

$$H \to -iE, \qquad E \to iH.$$

This electric-magnetic duality is a fundamental symmetry of the effective action of gauge theory, Abelian and non-Abelian.

- The old calculations calculated the effective action of Maxwell's theory coupled to massless charged gluon. This is a sick theory, not QCD.

- In physics something is wrong when we encounter tachyons.

  1. In Higgs mechanism we have tachyon when we choose the false vacuum.
  2. In NSR string we have tachyonic vacuum when we do not make the GSO-projection.

Monopole Condensation: More Evidence

1. Infra-red regularization by causality restores the SNO instability.

2. Perturbative calculation of the imaginary part shows that the effective potential has no imaginary part.

3. Explicit example of stable monopole-antimonopole background exists.

4. Quantum fluctuation of classical QCD vacuum (random orientation of $\hat{n}$) could generates the monopole condensation.

Weyl Symmetric Effective Potential of SU(3) QCD

- With the Weyl symmetry of SU(3) ECD we have

$$\exp\left[iS_{eff}(\hat{A}_\mu)\right] \simeq \sum_p \int \mathcal{D}\vec{W}^p_\mu \mathcal{D}\vec{W}^{(c)p}_\mu \mathcal{D}\bar{c}^p \mathcal{D}\bar{c}^{*p}$$

$$\exp\Big\{ -i\int \Big[\frac{1}{6}(\hat{F}^p_{\mu\nu})^2 + \frac{1}{4}(\hat{D}^p_\mu \vec{W}^p_\nu - \hat{D}^p_\nu \vec{W}^p_\mu)^2 + \frac{g}{2}\hat{F}^p_{\mu\nu}\cdot(\vec{W}^p_\mu \times \vec{W}^p_\nu)$$

$$-\bar{c}^{*p}\bar{D}^p_\mu D^p_\mu \bar{c}^p - \frac{1}{2\xi}(\bar{D}^p_\mu \vec{W}^p_\mu)^2\Big] d^4x\Big\},$$

at one-loop level. Surprisingly this is the sum of three SU(2) effective actions, which allows us to calculate the effective action of SU(3) QCD from that of SU(2) QCD.

- With the C-projection we have

$$\Delta S = i\sum_p \ln \mathrm{Det}(-D_p^2 + 2gH_p)(-D_p^2 + 2gH_p)$$
$$+i\sum_p \ln \mathrm{Det}(-D_p^2 - 2igE_p)(-D_p^2 - 2igE_p)$$
$$-2i\sum_p \ln \mathrm{Det}(-D_p^2),$$

and

$$\Delta\mathcal{L} = \lim_{\epsilon\to 0}\frac{g^2}{8\pi^2}\sum_p \int_0^\infty \frac{dt}{t^{3-\epsilon}}\frac{H_pE_pt^2/\mu^4}{\sinh(gH_pt/\mu^2)\sin(gE_pt/\mu^2)}$$
$$\Big[\exp(-2gH_pt/\mu^2) + \exp(+2igE_pt/\mu^2) - 1\Big].$$

- So we have the Weyl symmetric SU(3) QCD effective Lagrangian

$$\mathcal{L}_{eff} = \begin{cases} -\sum_p \Big(\frac{H_p^2}{3} + \frac{11g^2 H_p^2}{48\pi^2}(\ln\frac{gH_p}{\mu^2} - c)\Big), & (E_p = 0) \\ \sum_p \Big(\frac{E_p^2}{3} + \frac{11g^2 E_p^2}{48\pi^2}(\ln\frac{gE_p}{\mu^2} - c) \\ \qquad - i\frac{11g^2}{96\pi}E_p^2\Big). & (H_p = 0) \end{cases}$$

- Just as in SU(2) QCD, it is invariant under the dual transformation

$$E_p \to -iH_p, \qquad H_p \to iE_p.$$

- The effective potential for the monopole background is given by

$$V = \frac{3}{4}\sum_p H_p^2 + \frac{11g^2}{48\pi^2}\sum_p H_p^2 \ln\left(\frac{gH_p}{\mu^2} - c\right).$$

- Although the classical potential depends on one Casimir invariant $\vec{H}_3^2 + \vec{H}_8^2$, the effective potential depends on three Casimir invariants which can be chosen as $H_1,\ H_2,\ H_3$ (or equivalently $|\vec{H}_3|$, $|\vec{H}_8|$, and the angle θ between $\vec{H}_3$ and $\vec{H}_8$).

- Define the renormalized coupling $\bar{g}$ by

$$\forall_p \quad \frac{\partial^2 V}{\partial H_p^2}\Big|_{H_1=H_2=H_3=\bar{\mu}^2} = \frac{g^2}{\bar{g}^2},$$

and find

$$\frac{1}{\bar{g}^2} = \frac{1}{g^2} + \frac{11}{16\pi^2}\Big(\ln\frac{\bar{\mu}^2}{\mu^2} - c + \frac{5}{4}\Big), \quad \beta(\bar{\mu}) = \bar{\mu}\frac{\partial \bar{g}}{\partial \bar{\mu}} = -\frac{11\bar{g}^3}{16\pi^2}.$$

Asymptotic Freedom!

- Find the renormalized potential

$$V_{ren} = \sum_p \Big(\frac{3}{4}H_p^2 + \frac{11\bar{g}^2}{48\pi^2}H_p^2 \ln\big(\frac{\bar{g}H_p}{\bar{\mu}^2} - \frac{5}{4}\big)\Big).$$

which has the minimum $V_{min} = -\frac{11\bar{\mu}^4}{32\pi^2}\exp\big(-\frac{32\pi^2}{11\bar{g}^2} + \frac{3}{2}\big)$ at

$$\langle H_1\rangle = \langle H_2\rangle = \langle H_3\rangle = \frac{\bar{\mu}^2}{\bar{g}}\exp\big(-\frac{16\pi^2}{11\bar{g}^2} + \frac{3}{4}\big).$$

Notice that the effective potential breaks the original SO(2) invariance (of $H^2 + H'^2$) of the classical Lagrangian.

Mass Gap!

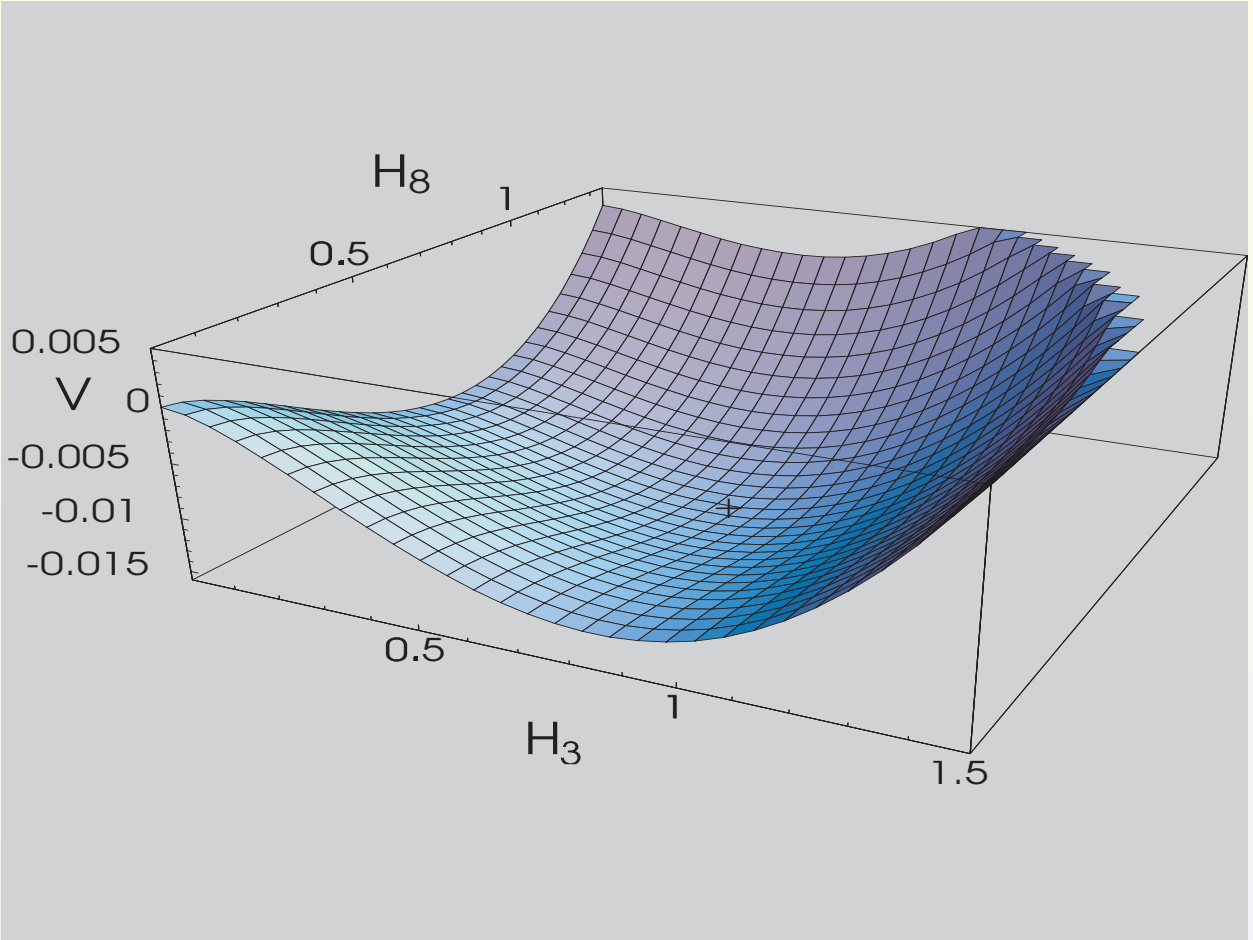

Figure : The effective potential with $\cos\theta = 0$, which has a unique minimum at $H = H' = H_0$ (or $H_1 = H_2 = H_3 = H_0$).

Monopole Condensation vs Dual Meissner Effect

- The confinement is NOT the dual Meissner effect.

1. In SC the Cooper pair has charge, but in QCD the monopole-antimonopole pair has no chromo-magnetic charge.
2. In SC the magnetic field comes from the electric current, but in QCD the chromo-electric field comes from color charge.
3. In SC the supercurrent screens magnetic field, but in QCD the monopole condensation confines the chromo-electric field.
4. In SC the vector potential describes the magnetic field, but in QCD the Coulomb (i.e., scalar) potential describes the color.
5. In SC we have the Higgs mechanism, but in QCD we have the dynamical symmetry breaking.

Observable Consequences

A. Two Types of Gluon Jets

- The Abelian decomposition tells that there are two types of gluons, the neurons and chromons, which behave differently. This predicts two types of gluon jets, the neuron jet and chromon jet.
- Experimental varification of two different gluon jets becomes an urgent issue which is as important as the confirmation of the gluon jet.

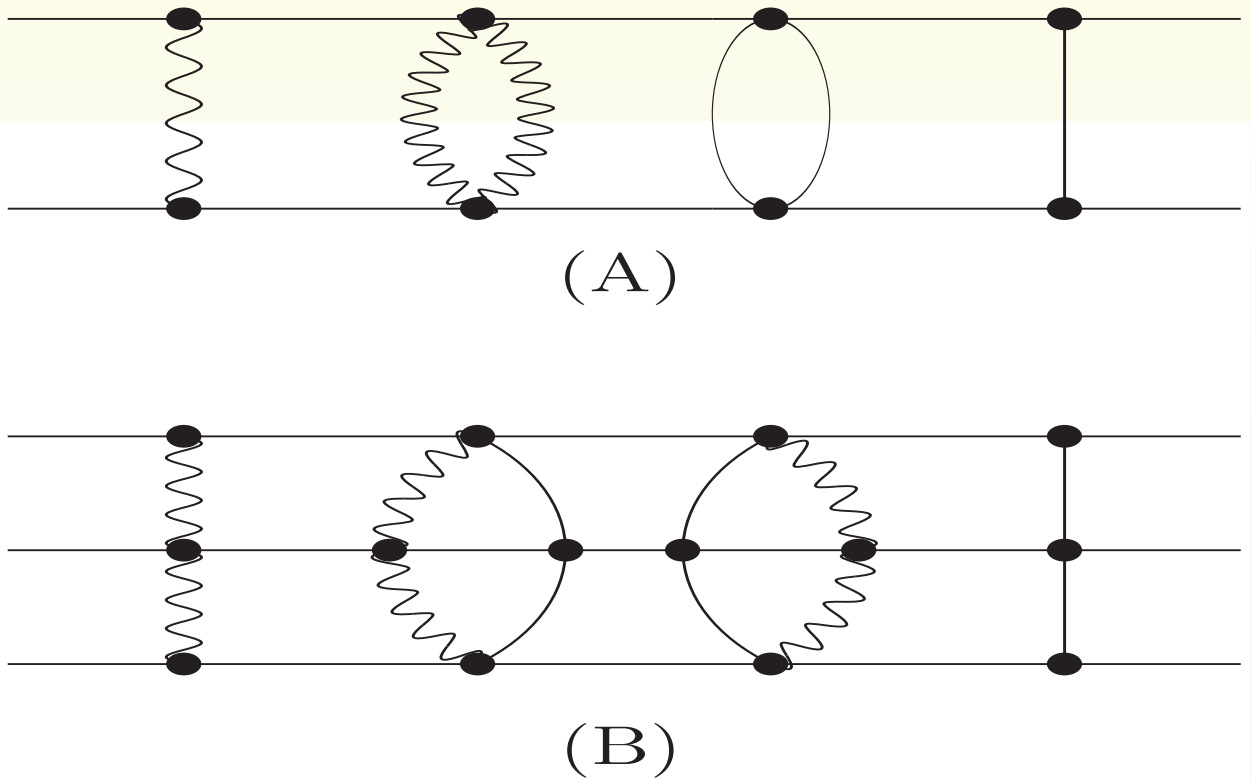

Figure : The Feynman diagrams of the chromoball binding.

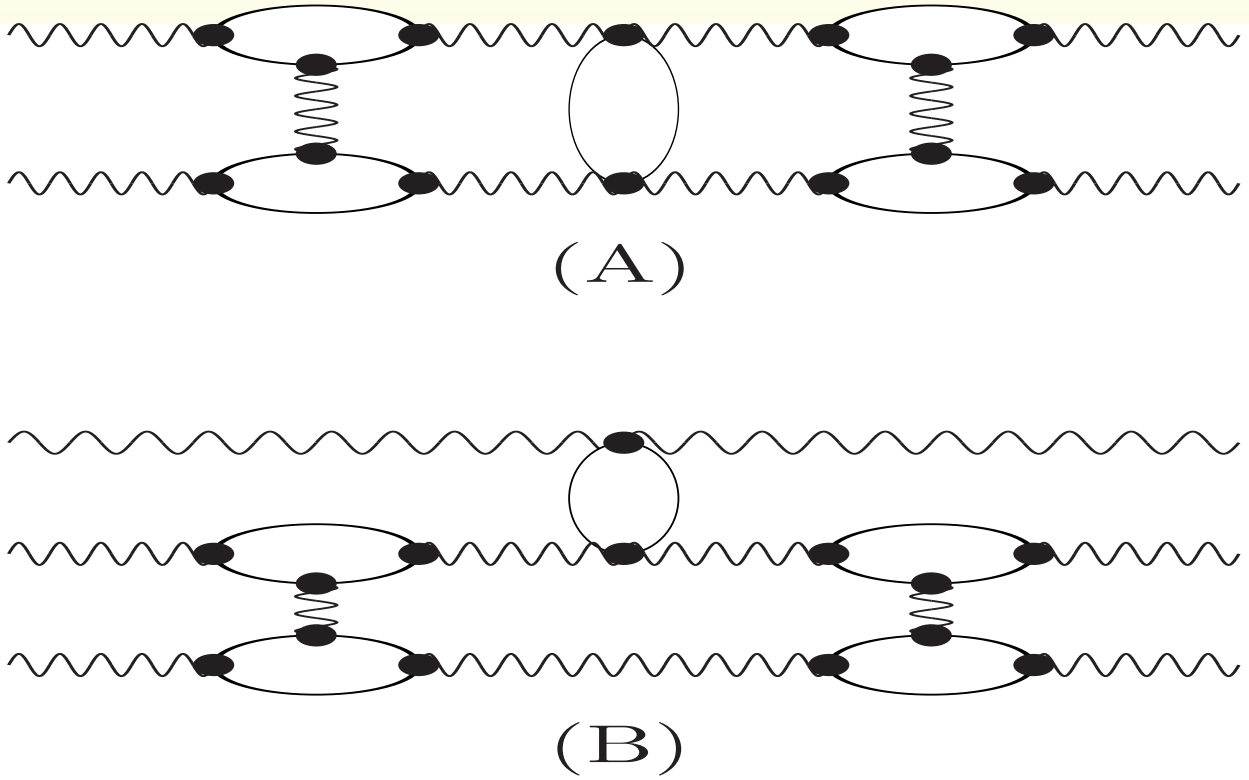

Figure : The Feynman diagrams of the neuron interaction, which is very much like the photon interaction in QED.

B. Quark and Chromon Model: Chromoballs and Mixed States

- The Abelian decomposition generalizes the quark model to the quark and chromon model which provides a clear picture of glueballs and their mixing with quarkoniums.

- The model predicts the chromoballs made of chromons. But experimentally, there are not so many candidates of chromoballs.

- There are two reasons for this. Unlike the quarks the chromoballs have intrinsic instability, and often mix with quarkoniums. This makes the identification complicated.

- Nevertheless we can make a systematic mixing analysis of chromoball-quarkonium in 0^{++}, 2^{++}, and 0^{-+} sectors below 2 GeV.

- The result shows that $f_0(1500)$ in the 0^{++} sector, $f_2(1950)$ in the 2^{++} sector, and $\eta(1405)$ and $\eta(1475)$ in the 0^{-+} sector could be identified as predominantly the glueball states.

- The quark and chromon model also predicts the hybrid hadrons made of chromons and quarks, which could be verified experimentally.

C. Monoball: Vacuum fluctuation of Monopole Condensation

- The monopole condensation could generate the quantum fluctuation. This suggests the existence of at least one monoball, the O^{++} vacuum fluctuation mode.

- Unlike all other hadrons, it originates from the QCD vacuum. This makes the experimental verification of the monoball an important issue in QCD.

$$f_0(500)???$$

Summary

- The Abelian decomposition is not just a mathematical proposition. It reveals the important hidden structures which simplifies the QCD dynamics greatly.
- It predicts two types of gluons, decomposes the Feynman diagram, simplifies the gauge symmetry, generalizes the quark model, and allows us to prove the monopole condensation.
- Moreover, it has other applications. It allows us to define gauge invariant canonical quark momentum, and resolve the proton spin crisis problem.

- References

1. G. Savvidy, PLB 71, 133 (1977); N. Nielsen and P. Olesen, NPB 144, 485 (1978).
2. Y.M. Cho, PRD 21, 1080 (1980); PRL 46, 302 (1981); PRD 23, 2415 (1981); See also Y.S. Duan and M.L. Ge, SS 11, 1072 (1979).
3. Y.M. Cho and D.G. Pak, PRD 65, 074027 (2002); Y.M. Cho, M. Walker, and D.G. Pak, JHEP 05, 073 (2004); Y.M. Cho and D.G. Pak, PLB 632, 745 (2006).
4. J. Schwinger, PR 82, 664 (1951); V. Schanbacher, PRD 26, 489 (1982).
5. Y.M. Cho, Franklin H. Cho, and J. H. Yoon, PRD 87, 085025 (2013); Y.M. Cho, IJMPA, 29, 1450013 (2014).