Searching for Magnetic Monopoles with Solid State Breakdown Counters: from LHC to Space

Igor Ostrovskiy

Outline

- Magnetic Monopoles
- Searches for MMs: the Gap between accelerators and cosmic rays
- Beyond NTDs: Solid State Breakdown Counters
- Towards closing the gap with SSBCs and CubeSats

Magnetic Monopoles

- Pierre Curie was the first to suggest that magnetic charges could exist

  Séances de la Société Française de Physique (Paris), p76 (1894)

- In 1931 Paul Dirac showed that if *just one* magnetic monopole existed, then all electric charge in the universe would be quantized

  Proc. Roy. Soc. (London) ***A 133****, 60 (1931)*

- In 1974 t'Hooft and, independently, Polyakov showed that *any* Grand Unified Theory (GUT) that incorporates electro-magnetism can contain magnetic monopoles

  Nuclear Physics B ***79****, 276 (1974)*

  Письма в ЖЭТФ ***20****, 430 (1974)*

"..the existence of magnetic monopoles seems like one of the safest bets that one can make about physics not yet seen"

J. Polchinski, 2003

- The existence of magnetic monopole is well motivated, but its mass and production mechanism are uncertain
- Historically, the GUT scale monopole (~10^{13} TeV) received the most interest. But one can not exclude the possibility of lighter monopoles
- **Intermediate mass monopole (IMM)** exists in GUT theories with several stages of symmetry breaking. IMMs would have been produced *after* the inflationary epoch and would *not* catalyze proton decay
- Monopoles with even lower masses are possible
  - **Cho-Maison's "Electroweak" monopole has expected mass ~4-10 TeV**

*Phys. Lett. B **391**, 360 (1997)*
*Eur. Phys. J. C 7**5**, 67(2015)*

- **MMs are expected to be very highly ionizing in most scenarios**

Magnetic monopole searches

- This talk cannot do justice to the decades of MM searches
  - See review talks by Laura Patrizii and Vasiliki Mitsou
- One thing to point out – currently there seems to exist a gap in the space of MM masses that is not explored by experiment
  - The accelerator based searches push the limit from "below", being sensitive to MMs with ***m* < 10^1 TeV/c^2**
  - All (?) searches in cosmic rays so far are, on the opposite, only sensitive to ***m* > ~10^3 TeV/c^2** or more, due to energy losses in atmosphere/Earth and geomagnetic cut-off
- Incidentally, the Cho-Maison MM's mass likely lies in this gap region

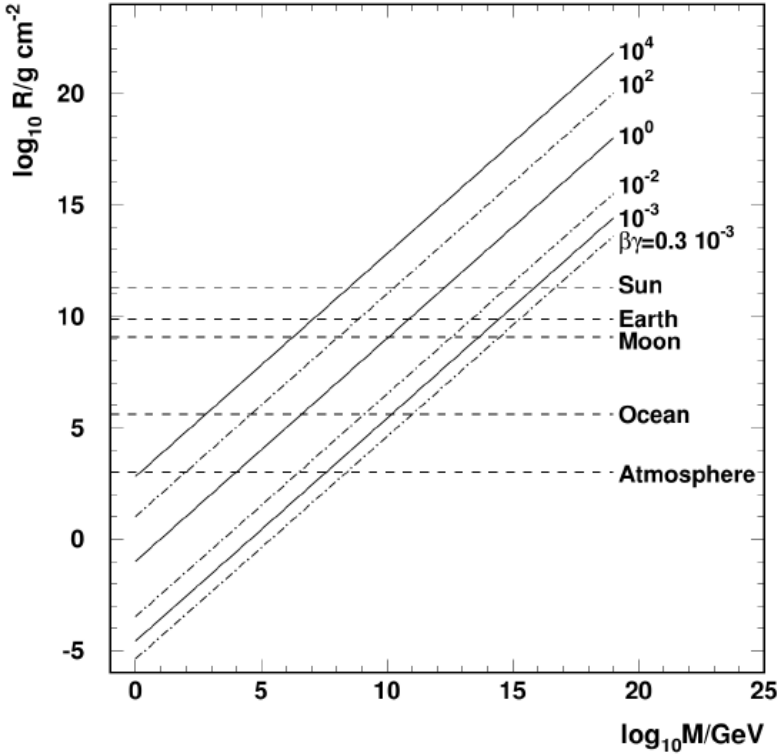

The ranges of Dirac magnetic monopoles as a function of the monopole mass for different values of $\beta\gamma$, for velocities below which stochastic processes make little contribution to the monopole stopping power. The horizontal lines show the widths of various possible stopping bodies for the magnetic monopole. From *Physics Reports, **582**, 2015, p.1*

Magnetic monopole searches: the gap region

- MARCO
  - isotropic relativistic (slow) MMs with $m > 10^7$ ($>10^{15}$) TeV/c^2 and down-going relativistic (slow) with $m > 10^3$ ($>10^7$) TeV/c^2
- SLIM
  - $m > \sim 10^3$ TeV/c^2
- Recent IceCube's results
  - Looked for up-going MMs (*EPJC, **76**, n.3, p. 1, 2016*), so $m > \sim 10^9$ TeV/c^2
  - Looked for MMs catalyzing proton decay (*EPJC, **74**, 2938, 2014*), so $m \sim$ GUT scale
  - Electroluminescence can probe lower masses?
- Recent ANTARES' results
  - $m > 10^7 - 10^{11}$ TeV/c^2

Magnetic monopole searches: the gap region

- B.Price was flying balloons with NTDs back in the 70s
  - Limited Exposure – 18 m^2, but only 40 hrs. at high altitude (*PRD, **18**, p. 1382, 1978*)
  - Should in principle be sensitive to the gap region, based on dE/dx
- But one should also consider the implications of the Earth's M-field
  - The claimed signal (m > 0.6 TeV/c^2, β ~ 0.5) could not sustain the downward trajectory. Small mass MMs must be highly relativistic to penetrate (*PRL, **36**, n.16, 1976*)

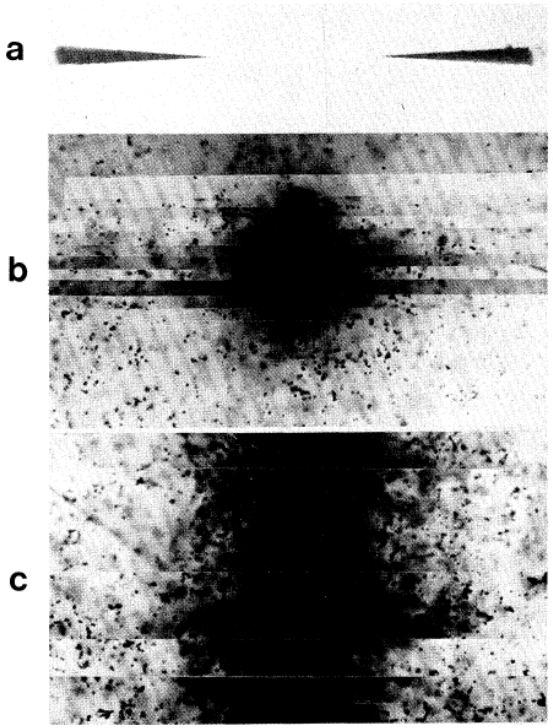

FIG. 4. Photomicrographs of the monopole track in (a) a Lexan sheet (epoxied, sliced, and viewed edge-on), and (b) G-5 emulsion (viewed nearly vertically). In (c), note the greater lateral extent of δ rays from a nucleus with $Z \approx 92$ and $\beta \approx 0.6$.

*Phys. Rev. Lett. **35** (1975) 487*

MoEDAL – dedicated search at the LHC

- Looks for magnetic monopoles and other highly ionizing particles with magnetic and/or electric charge
- Along with ATLAS/CMS can peek into the gap region from the side of lower masses (m ~ few TeV/c^2)
- See talks by James Pinfold and Kazuki Sakurai

Main sub-detector system: NTDs

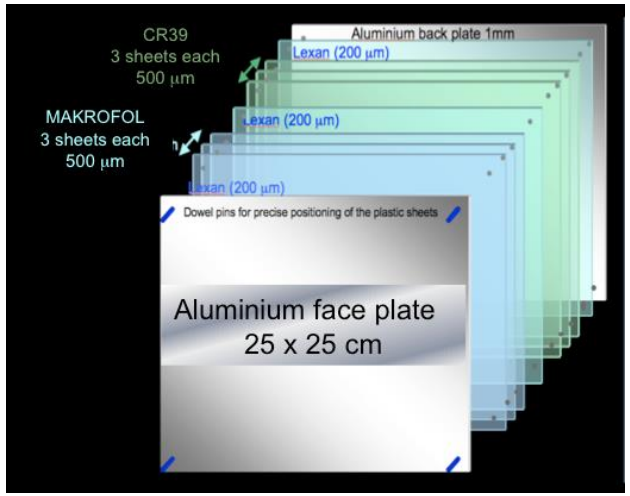

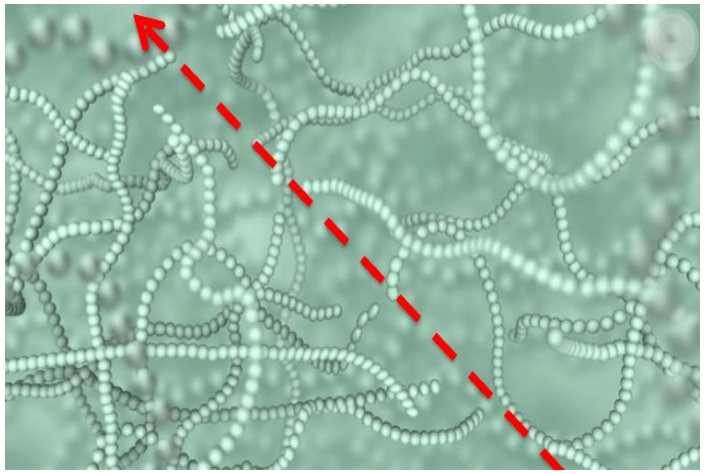

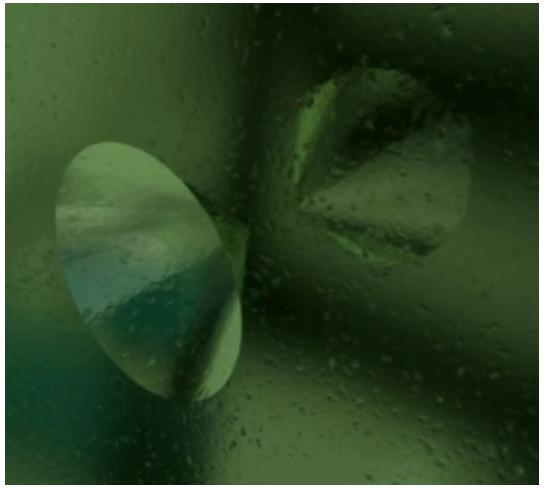

- Stacks of CR-39 (5 MIP threshold) and Makrofol (50 MIP threshold)
- Highly ionizing particle creates a latent track by displacing atoms, revealed by controlled etching
- Practically no Standard Model backgrounds, only sensitive to new physics

Beyond NTDs: Solid State Background Counters

- Nuclear Track Detectors (NTDs) are the staple of magnetic monopole searches

- But they also require a lot of hidden effort and monetary costs
  - Time and personnel to extract the signal can become prohibitive for next generation large area experiments

- What if one could combine the above pluses with real-time electronic registration at little to no hidden cost?

SSBC: Everything New is Long-Forgotten Old

- Solid State Breakdown Counter (SSBC) was used in some experiments that needed to single out heavy ions, fission fragments in the presence of very high fluxes of alphas, gammas, neutrons
- The principle of operation is based on an electric breakdown of a thin film capacitor triggered by a highly ionizing particle
- Threshold ionization losses of 10 – 70 MeV·cm^2/mg in SiO_2
  - Like for NTD, practically no background

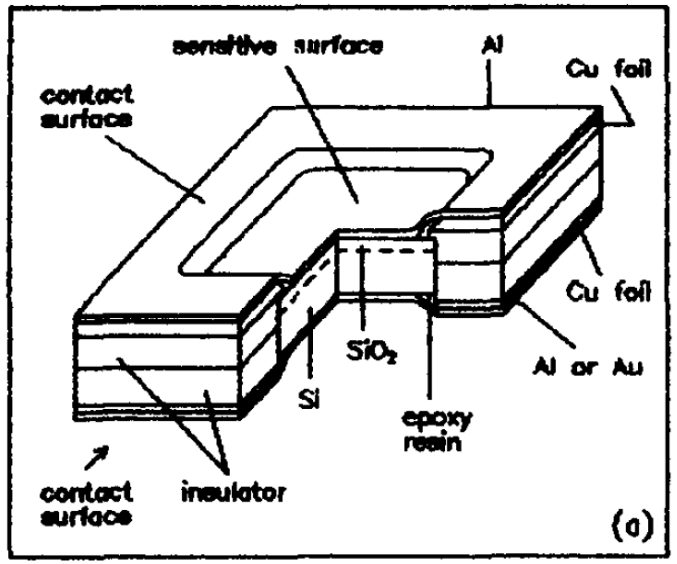

From a Eismond et al. 1995.
substrate could be sub-mm

Detector concept

Fast (ns) and large (up to ~V) signals

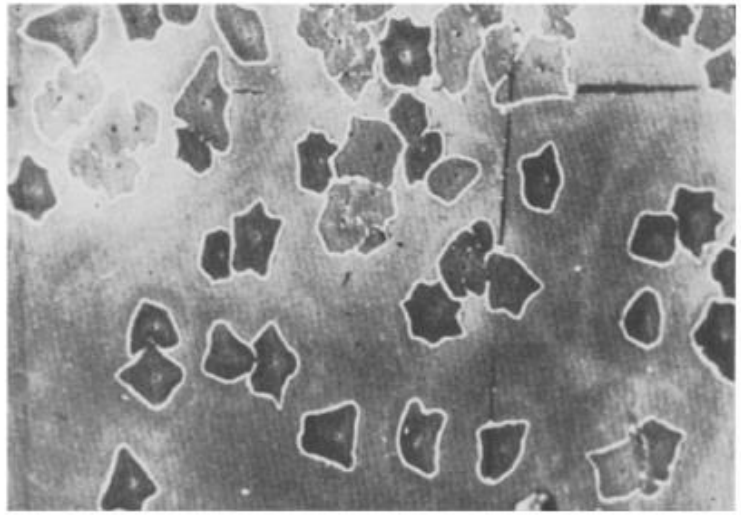

Fig. 2. Electron microscope photograph of breakdown spots (magnification 300 ×).

From Dorschel et al. 1983

Detection efficiency >80%

From Smirnon et al. 2012

Why is SSBC useful?

- Gives immediate electronic feedback about passage of a highly ionized particle

- If one “sandwiches” a stack of NTD between two layers of SSBC, the spatial segmentation of SSBC allows one to pinpoint the location – *great reduction in NTD processing time!*

Why is SSBC useful?

- Additionally, MOM SSBC is the only practical choice for a large area search for the gap region MMs in orbit
  - Lightweight
  - Low cost
  - Requires only low current low voltage supply
  - Outputs large pulses that do not need amplification

- The current disadvantage is absence of spectroscopy information. Potential (not observed?) presence of ultra-heavy nuclei in cosmic rays may mimic a signal

SSBC at UA

- Plan to develop technology of individual devices up to 100 cm^2
- Upon successful threshold calibration with accelerated heavy ions, plan to produce 0.1-1 m^2 of devices to be installed at MoEDAL

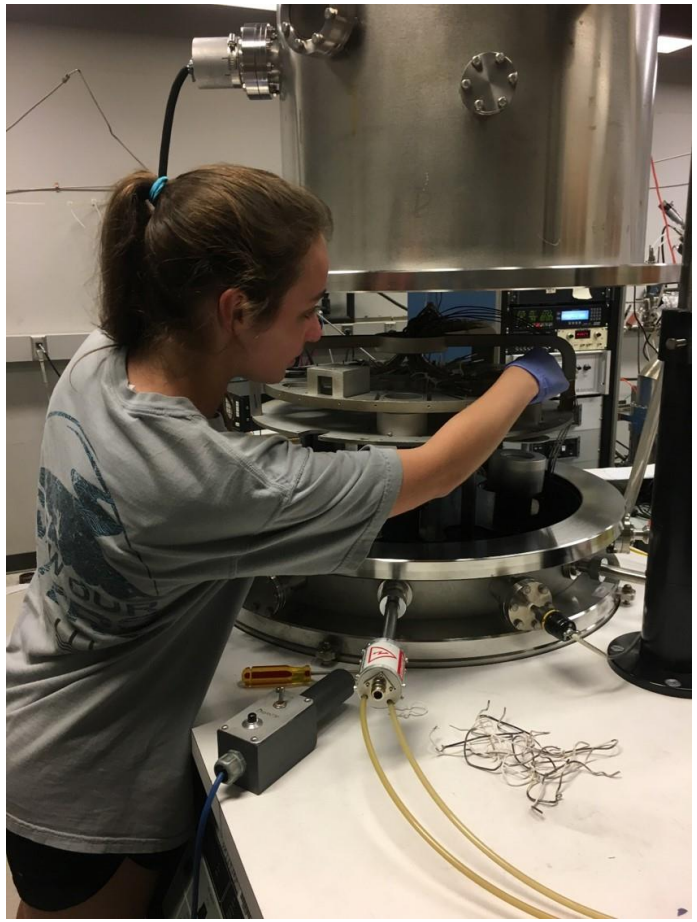

UA undergrad Andi Wall works on manufacturing SSBC prototypes at UA microfab facility

SSBC at UA

10 cm^2

25 cm^2

25 cm^2, Packaged

- Working on a new variant of SSBC at the University of Alabama
  - MOM, instead of MOS. Ta(100nm)-Ta_2O_5 (20nm)-Al(20nm) on atomically polished glass substrate
- Current prototypes show good electrical properties
- Next step is to understand the threshold in terms of dE/dx

SSBC at MoEDAL

- MoEDAL expressed interest in this technology
- The plan is to cover some ~0.1-1 m^2 surface area as a first of its kind deployment of breakdown counters in a magnetic monopole search
- LHC timeline works very well with a typical Ph.D. timeline

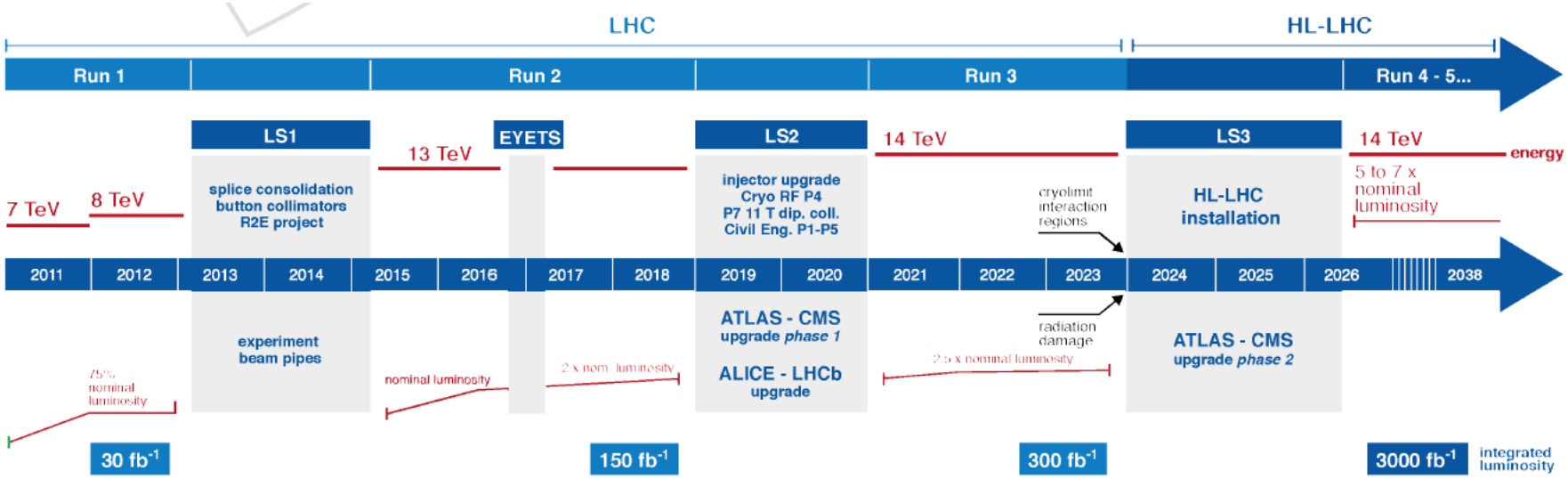

CubeSats

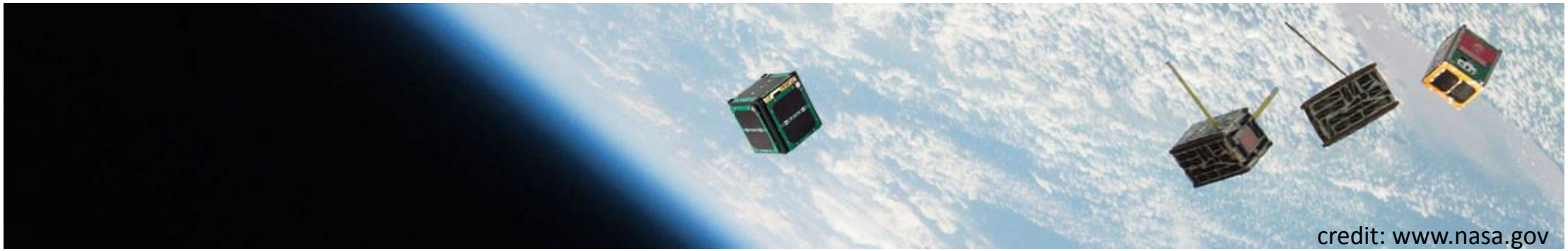

- If MMs have mass in the gap region, e.g. the Cho-Maison's MM with an estimated m~10^1 TeV/c^2, there might be little chance to detect it with Earth's and Low Earth Orbit based experiments. One needs to go outside of the Earth's M-field, e.g., to Geosynchronous Earth Orbit (GEO)
- Together with the Aerospace Engineering department, plan to deploy the SSBC detectors in the GEO
- As far as I know, no prior analogs. There were a couple of deployments of NTDs, but only in LEO
- Without the effects of the Earth's atmosphere and magnetic field, one should be able to probe MMs with the lowest achievable restrictions on mass and velocity
  - SSBC combine threshold properties of NTDs with electronic registration, allowing this to happen

CubeSats: the reality check

- Right now you are probably thinking that this is unrealistic – no chance of getting enough exposure, given how hard and expensive Space experiments are
- But consider, however, how amazingly quickly the CubeSats are revolutionizing the university-level science
  - A few years ago, 1U CubeSat (10x10x10 cm^3) was all there was
  - When I started at the UA in 2016, the Aerospace Engineering was offering the 6U CubeSat
  - This year, the NASA's ROSES-18 D.15 calls for proposals requesting up 24U satellites (with possibility of constellations!)

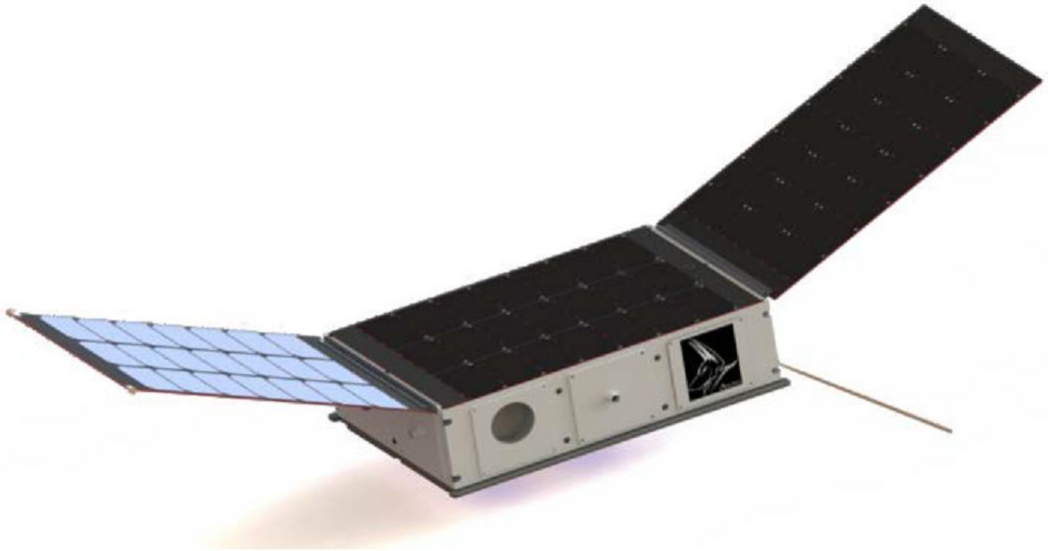

A 6U CubeSat. Active surface area: 0.22 m^2 (0.34 m^2 if back surfaces of the solar panels are instrumented)

Credit: Educational partnership between Aerospace Engineering department of the University of Alabama (Prof. Rich Branam) and Air Force Institute of Technology (AFIT)

SSBC with CubeSats: first steps

- Begun work on preliminary design in collaboration with Dr. Branam's group

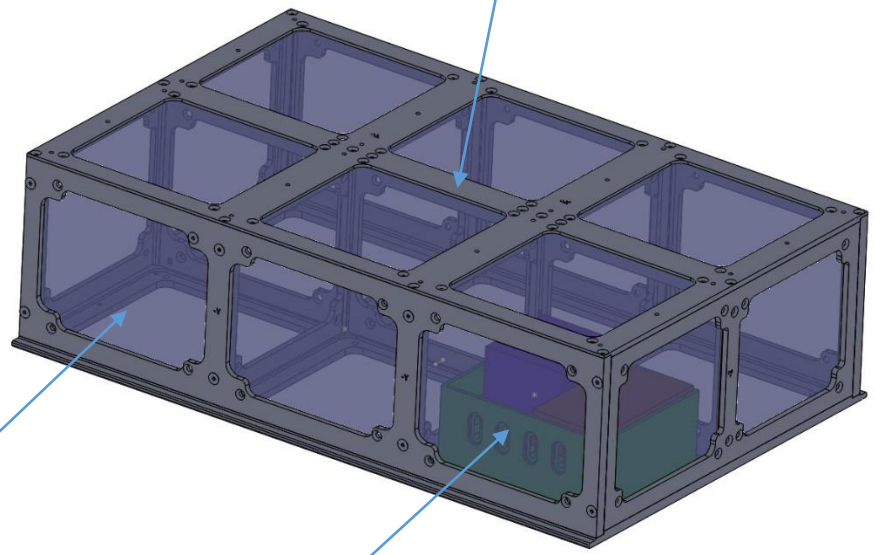

CubeSats: Reach

- Another advantage – the lifetime in the GEO is much larger, 5-15 years
- So with just a single 6U CubeSat (0.24 m^2 active area), one will exceed the Price's balloon experiments exposure by an order of magnitude after several years
- With a 24U CubeSat, an estimated flux sensitivity after 10 years is $<10^{-13}$ $cm^{-2}sr^{-1}s^{-1}$ at 90% C.L.
  - Still just 1% of the Parker bound.
  - However, even such an exposure was unrealistic for an academic experiment a decade ago. The rapidly increasing accessibility of space may allow this experiment to pave the way for the future definitive deployment
- Parker bound notwithstanding, the proposed deployment will be exploring the part of the parameter space not accessible previously

Summary

- While several experiments have placed impressive limits on fluxes of MMs, there seems to be a region of (low) MM masses – from ~10^0 to 10^3 TeV/c^2 – that is not yet adequately probed
  - Incidentally, there is theoretical motivation for MM to have a mass in this region
- MoEDAL is a dedicated search of low mass magnetic monopoles at the LHC
- Solid state breakdown counters could expand and complement the capabilities of the currently used monopole detectors
- If Cho-Maison MM really exists and has a mass just out of reach of the LHC, going to an high altitude orbit, e.g., GEO, may remain the only way of searching for them for decades to come, and SSBC@CubeSats is possibly the best tool to do this

Magnetic Monopole's basic properties

$e \cdot g_D = \frac{\hbar c}{2} n \rightarrow g_D = \frac{n}{2\alpha} e \Rightarrow$ $\mathbf{1 g_D = 68.5 \cdot e}$	• If fundamental charge is $e/3$, then $g_M = 3 g_D$
$\frac{g_D^2}{\hbar c} \sim 34$	• Perturbative field theory **does not apply**
$W \sim 2 \frac{MeV}{G \cdot m}$	• IMMs in the galactic field and LHC monopoles will be **relativistic**
$-\frac{dE}{dx} \sim \frac{Z}{A} g_M^2 \cdot \left[\ln\left(\beta^2 \gamma^2\right) + \ \ldots\right]$	• Fast monopoles are highly ionizing! $\frac{dE}{dx} \sim g_M^2$= **4700 MIP** for $1 g_D$ • Ionization of g_M **increases with β**, as opposite to e