Evian 2017 workshop

LHC-TDE dump block 2017 operational review and outlook for 2018

M. Calviani, S. Gilardoni (EN-STI)

Thanks to: TE/ABT, TE/VSC, EN/MME, EN/HE, EN/EA, HSE/RP, EN/ACE

CERN | EN ENGINEERING DEPARTMENT

Outline

1. 2017 operational report and feedbacks
2. Graphite oxidation studies and consequences
3. Outlook for YETS and 2018 operation
4. Conclusions

2017 operational report

Current status

- UD62 dump block showed a significant leak (not clearly identified location – possibly around the downstream window)
  - Core current at atmospheric pressure
- UD68 small leak downstream window
  - UD68 core at nominal overpressure and no leak evolution in 2017 with respect to 2016
- N_2 atmosphere still guaranteed in both dumps
  - Access to tunnel still necessary to exchange N_2 bottles
  - Preference to run with N_2 to avoid any possible core oxidation in presence of air in high temperature regions

Dump block configuration

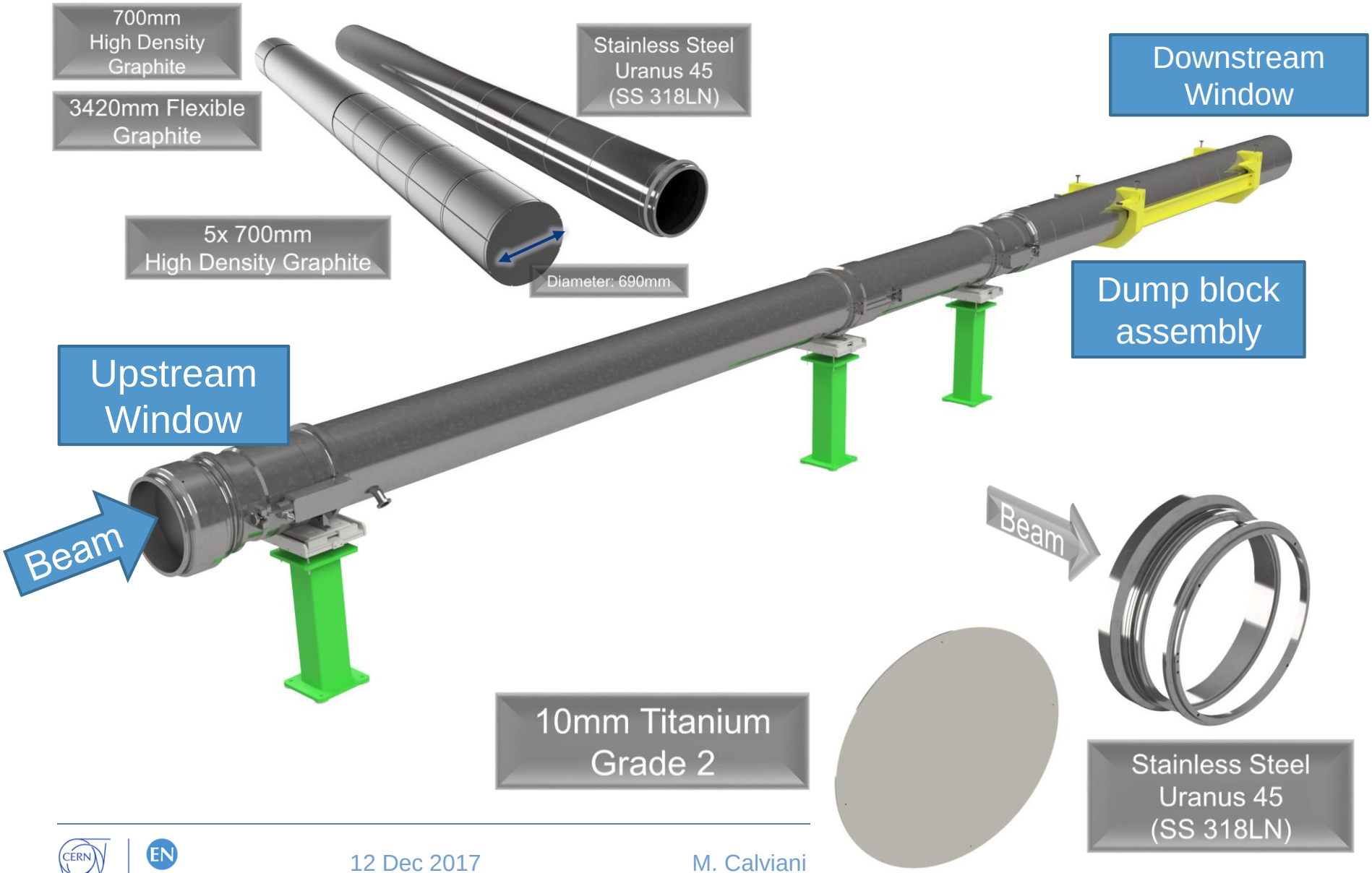

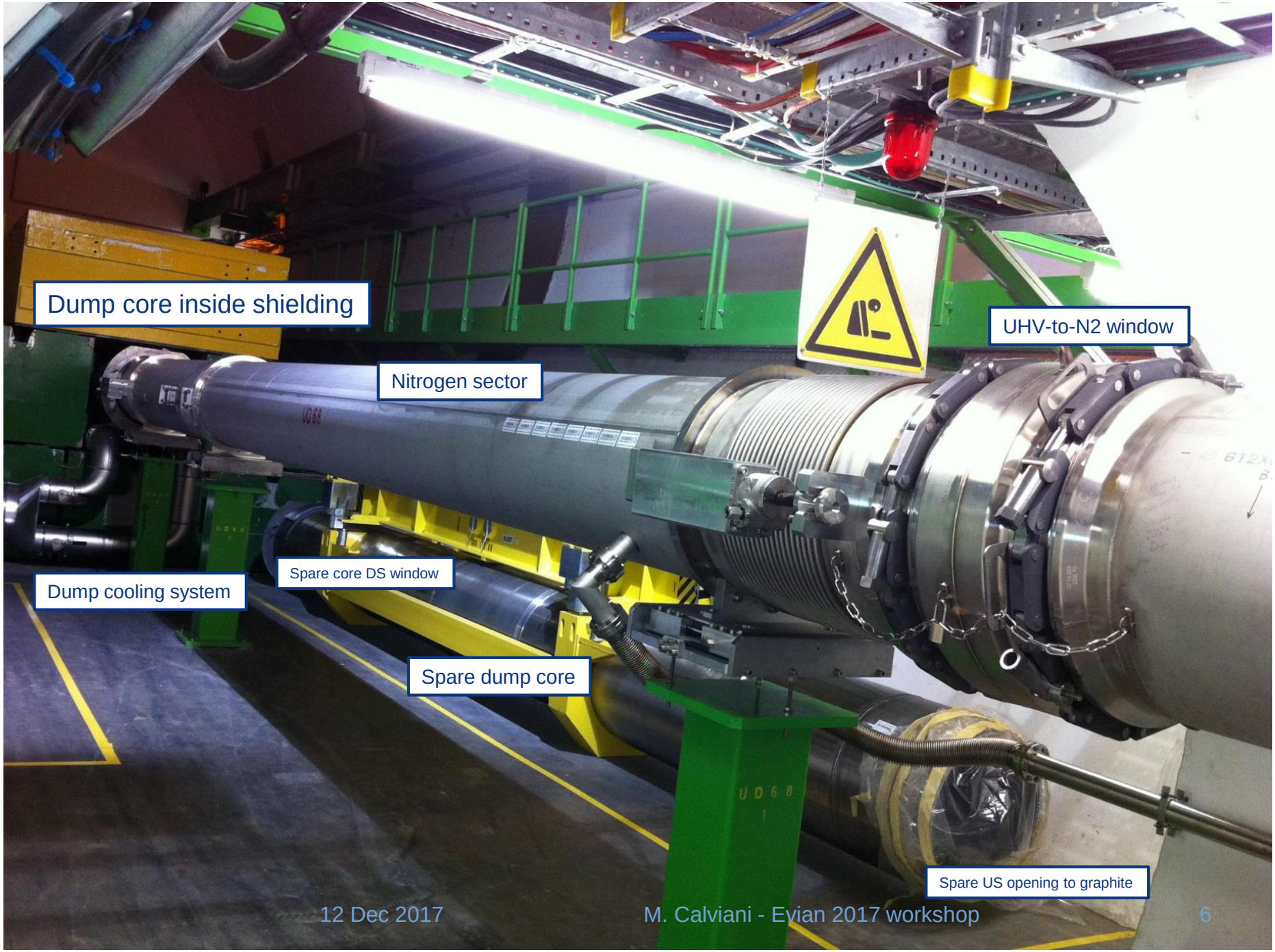
Dump core inside shielding
UHV-to-N2 window
Nitrogen sector
Dump cooling system
Spare core DS window
Spare dump core
Spare US opening to graphite

Reminder of past observations (2015)

- November 2015:
  - Leak in the UD62 (5-10 mbar*l/s), fixed by tightening flanges close to the dump
  - Operation ok in 2016

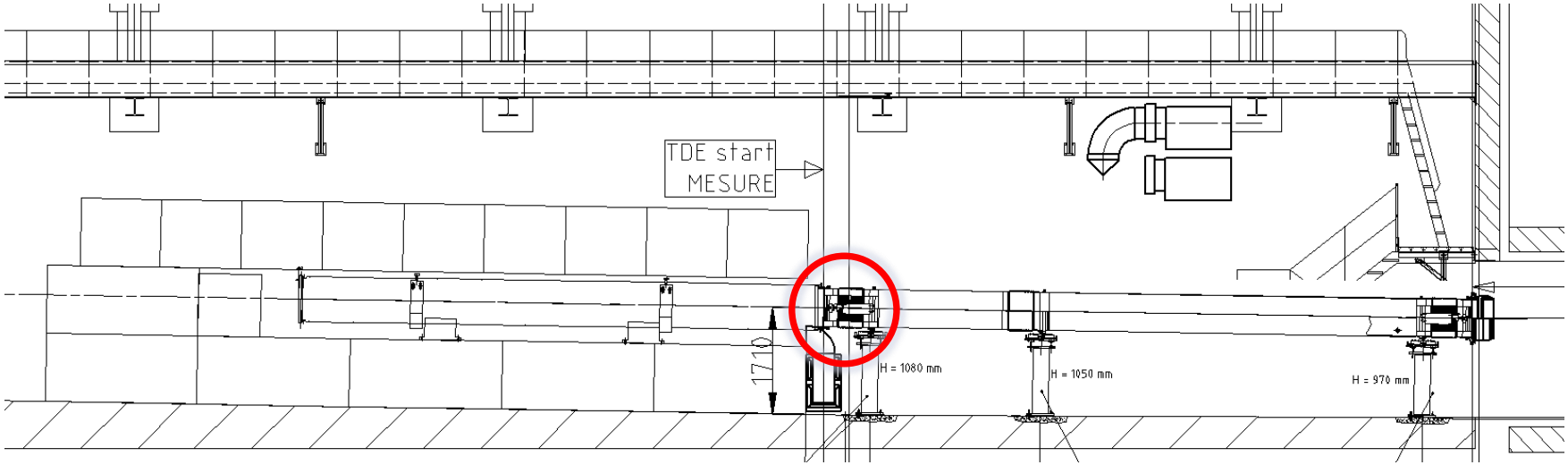

LMC#259

Reminder of past observations (2016)

- April 2016:
  - Leak appeared in UD68, confirmed by 1000bulles, in the flange downstream the C/C window
  - Fixed during EYETS16-17
  - ~2-3 mbar*l/s

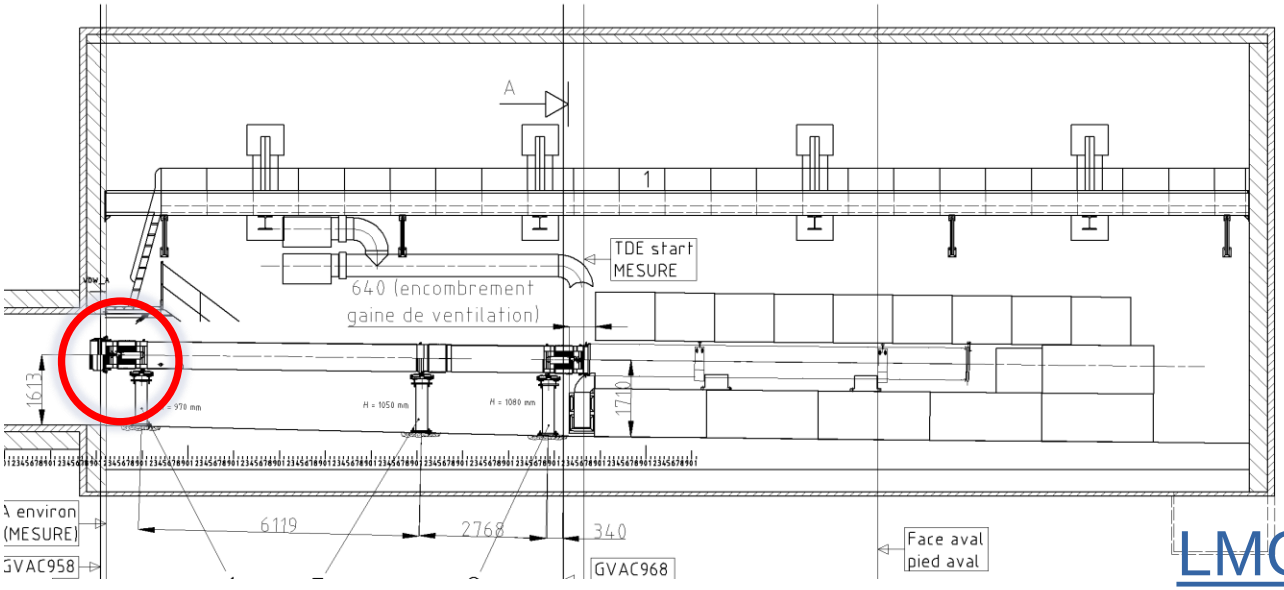

LMC#259

2017 observations

- During mid August 2017, following a series of high intensity dumps (following the 16L2 issue), the UD62 dump developed (again) a major nitrogen leak
- >> 10 mbar*l/s

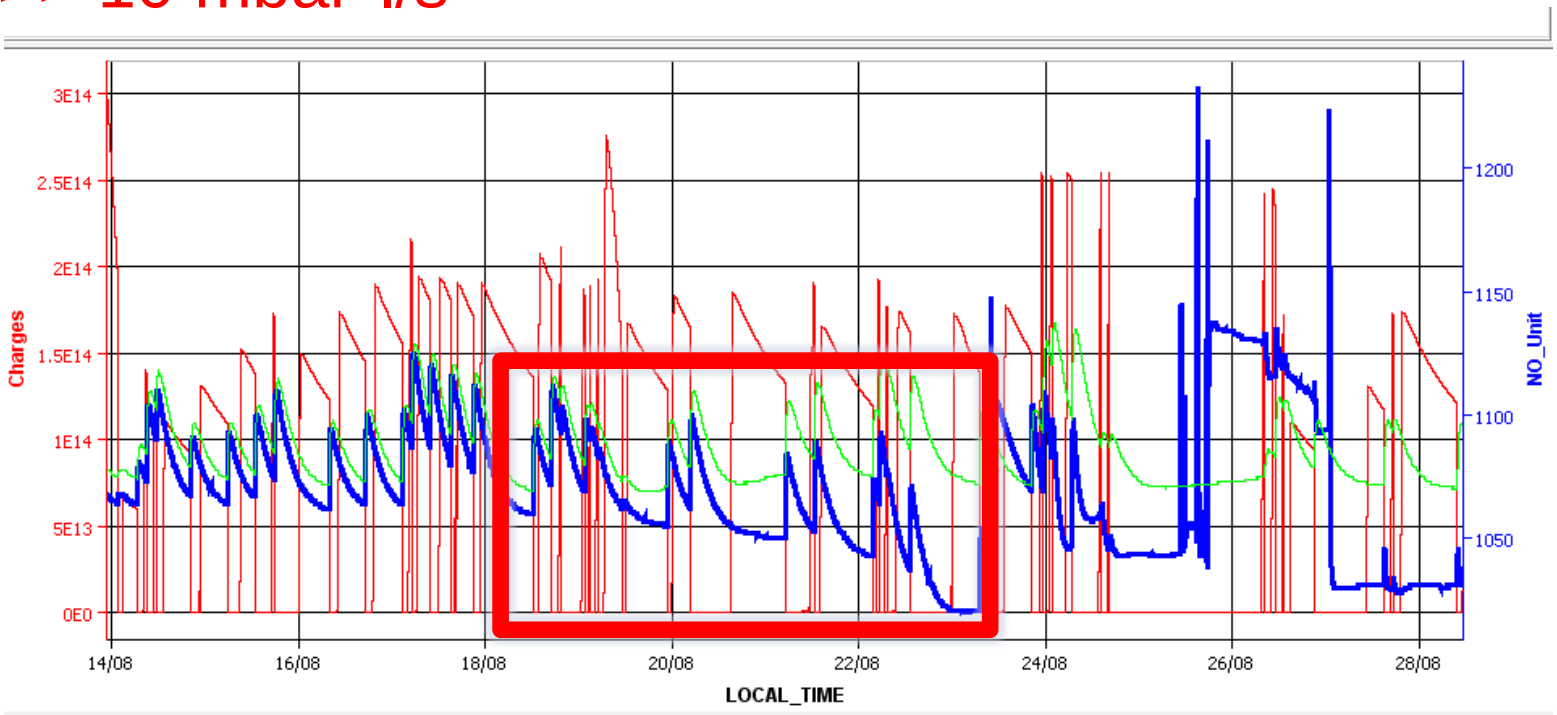

N_2 leaks consequence

- Original worry (triggered by the LHC TDR) was that graphite exposition in air would have trigged a “significant damage”
- Therefore conservative decision (w/ MPP) to maintain – at all times – a nitrogen atmosphere inside the dump core
- Studies executed in 2017 indicated that the risk of massive oxidation (at least for the current operational scenario) can be excluded (*details later*)

2017 observations

- Bottle racks exchanged several times in order to guarantee N_2 flow in the UD62 dump
- In all case, bottle exchange has been a preventive measure, without a real operational risk
- Most intervention executed in the shadow of other activities
  - Could have become **several tens of hours** cumulative “downtime” if required to be executed exclusively

Intervention during TS2

- In order to identify the possible leak location, robotic inspection performed on the UD62 dump block downstream window during TS2
- Despite the significant amount of effort, the leak was **not** identified (dump was NOT under vacuum)

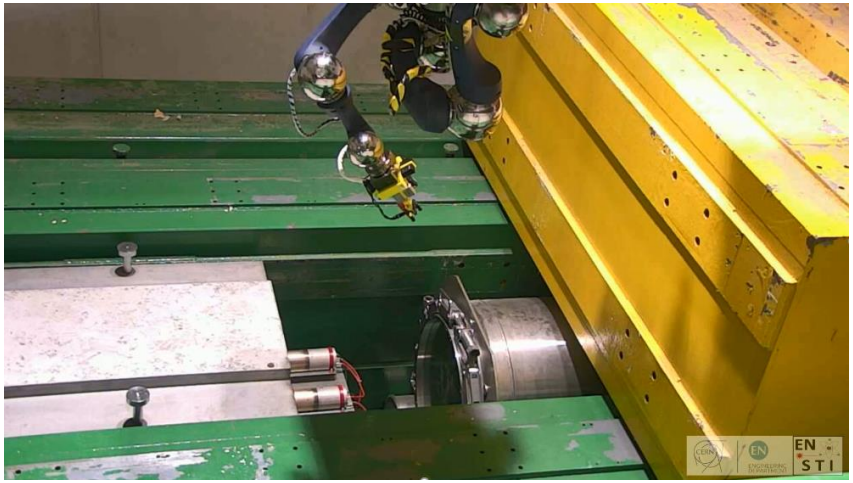

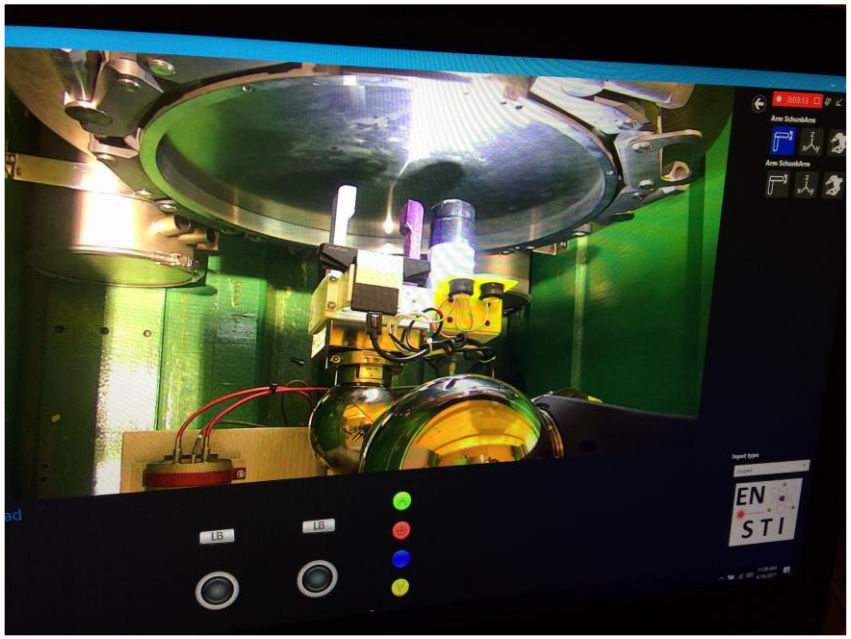

Graphite oxidation studies (2017)

Temperature rise

- Temperature rise defined by beam sweep
- Nearly linear with bunch intensity
- Small variation with number of bunches (2508 is ~same of 2750-2808)

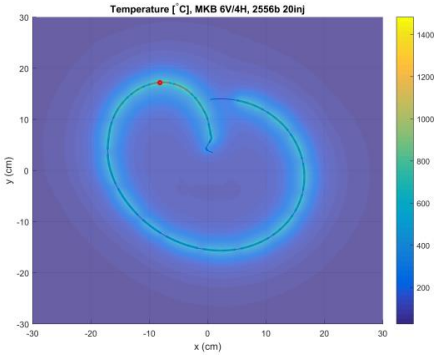

Regular beam sweep

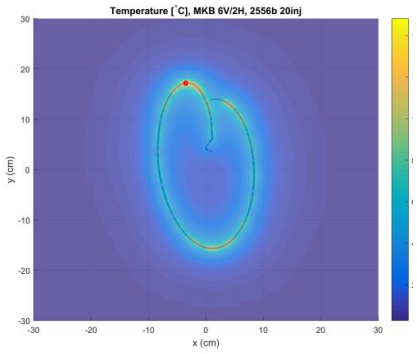

Two horizontal kickers missing

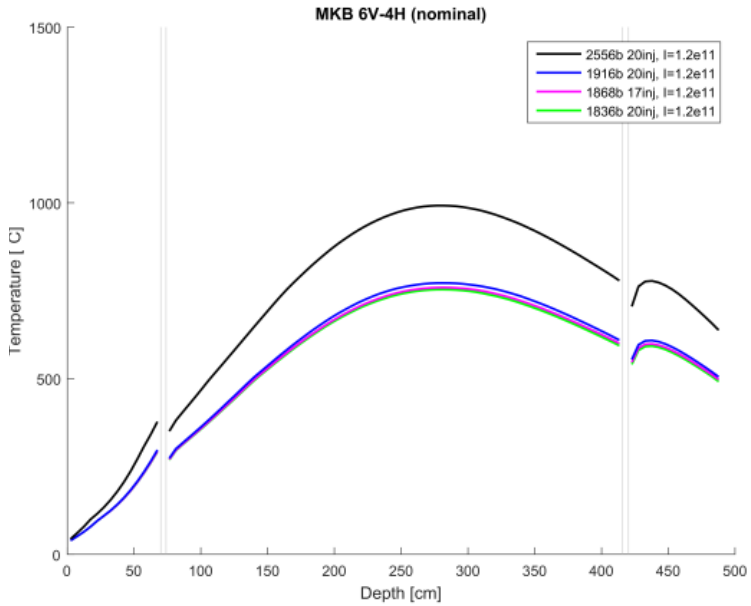

Regular beam sweeps

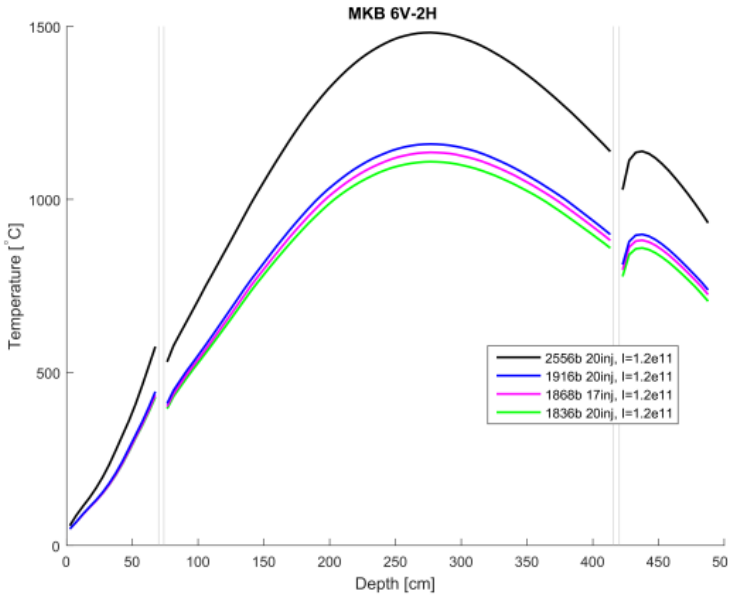

Two horizontal kickers missing

Expected temperature TDE rise

Bunch intensity: 1.2 x 10^{11} protons
Emittance: 1.4 murad (peak temperatures in the TDE show only weak dependency on transverse bunch emittance because sweeps dilution dominates)

	Regular sweep		Two horizontal dilution kickers not firing	
Number of bunches	Max. temperature in low-density core	Max. temperature at surface in contact with N_2	Max. temperature in low-density core	Max. temperature at surface in contact with N_2
2556	990 °C	780 °C	1480 °C	1140 °C
1916 (8b4e)	770 °C	610 °C	1160 °C	900 °C
1868 (8b4e)	760 °C	600 °C	1140 °C	880 °C
1836 (8b4e)	750 °C	600 °C	1110 °C	860 °C

Peak temperature depends on how many empty buckets one has in the slow part of the sweep

- If gaps between train changes then minor change in the high-T regions
- If filling scheme changes, then minor change in the high-T regions

Graphite tests at high T

1. Laser impact in air (CERN)
   - Temperature reached – 900-1300 ˚C
   - Exposition time ~10 ms
   - No clear indication of oxidation, generated damage induced by thermo-mechanical stresses (not representative of stresses from proton beams)
2. Graphite exposed to **1200 ˚C** in oven for both Sigrafine (SGL)
   - Sigraflex tests ongoing as we speak
3. Tests also at **2500 ˚C** for short-term on Sigrafine (10 s) (SGL)

Results of oxidation tests (Sigrafine)

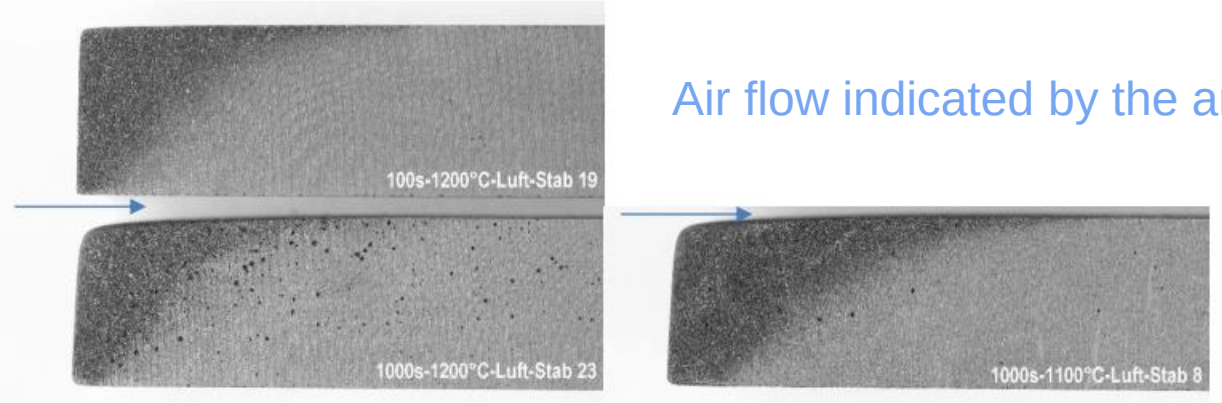

Air flow indicated by the arrows

- Reaction observed after the air meets the graphite surface
- After 1000 s, holes observed on the surface
- Mass loss remains limited: **~1% for 100 s**, **~4% for 1000 s**
  - **In the real application, T is >400 C for 1 s after each dump → 100 s roughly equivalent to 100 dumps**
  - **Expected slightly higher factor for Sigraflex**
- Tests at 2500 ˚C excluded the possibility of massive oxidation

Comments on graphite oxidation

- As well known, graphite is sensitive to oxidation at high temperature
- Oxidation highly dependent on temperature and exposition time
- **At significantly high T (>1500 °C) oxidation limited to surface, for exposition times of 10 s for Sigrafine**
- Greater mass loss observed for longer exposition times, but still attack limited to surface
- **All tests more pessimistic that actual conditions in TDE**
  - Report at the 153rd MPP meeting
  - Comprehensive report including all these studies being written. Expected to be released by **beginning 2018**
- **Running the dump in air would be a degraded mode scenario, but acceptable if operation limited in time**

Outlook for YETS and 2018 operation

Identified weak points potentially affecting 2018 operation

1. N_2 bottles exchange
   - Could entail several hours of downtime if not in the shadow of another intervention

   → installation of a N_2 line

2. Risk of breaking DS window (+ gaskets)
   - Could lead to even bigger leaks

   → Modify the window on a spare core (DdD on operational dump ~20 mSv/h)

Installation of N_2 line to dumps – YETS17-18

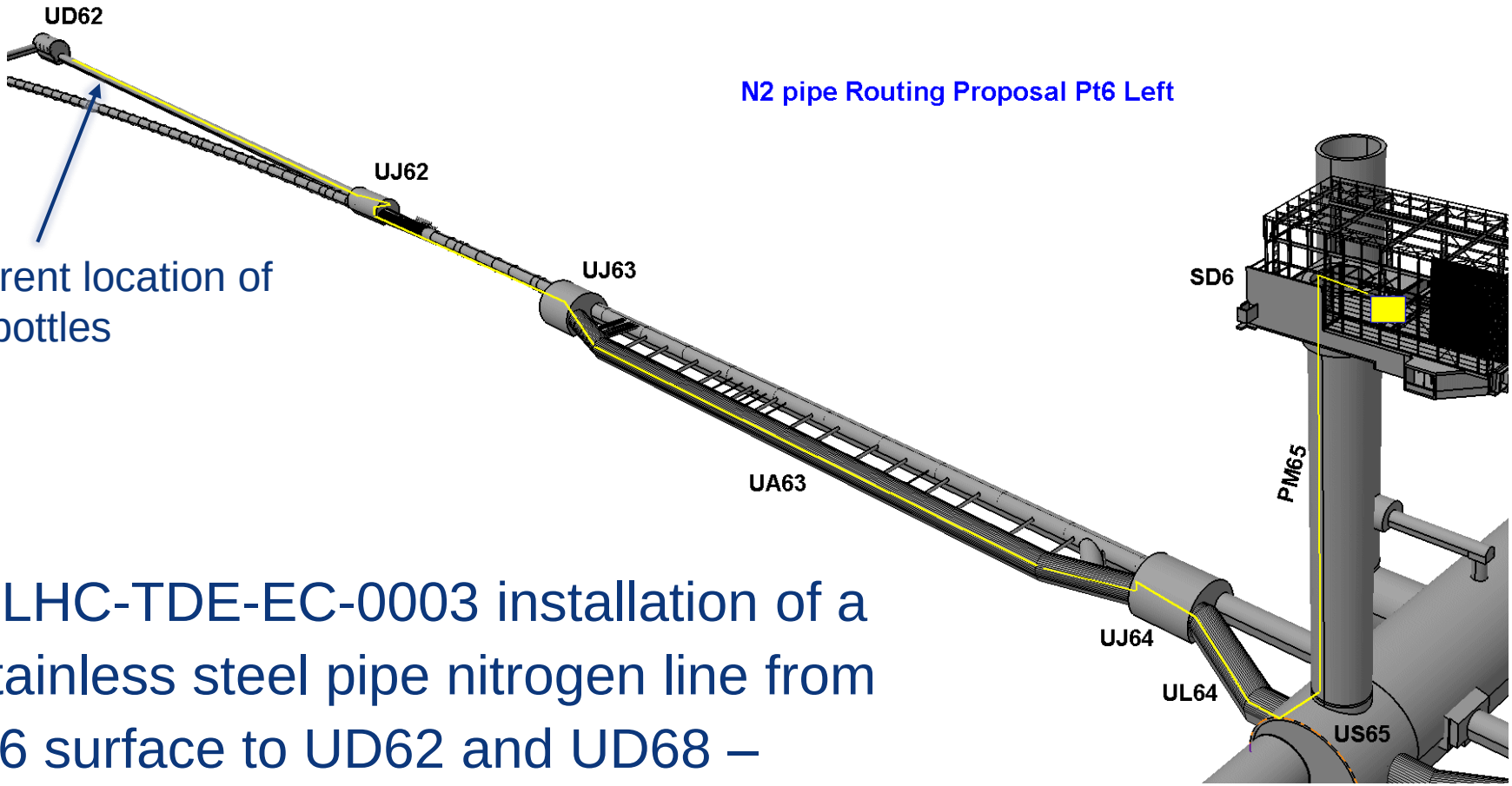

Current location of N_2 bottles

- LHC-TDE-EC-0003 installation of a stainless steel pipe nitrogen line from P6 surface to UD62 and UD68 – approved during LMC331
- **Both dumps to be done**

Installation of N_2 line to dumps – YETS17-18

- Advantages
  - In case of issues with bottles or with an increased leak, possibility to decouple N_2 bottle replacement and LHC operation
  - Not anymore slightly radioactive bottles to manage as activated waste
- Risks
  - Leak along the N_2 line → leave possibility to connect bottles at current location close to dump with a separation valve
  - Need of large N_2 overpressure not necessary if N_2 atmosphere/flux maintained to avoid any core oxidation – **UD68 stable condition should not be changed**

New design of DS window

Current design

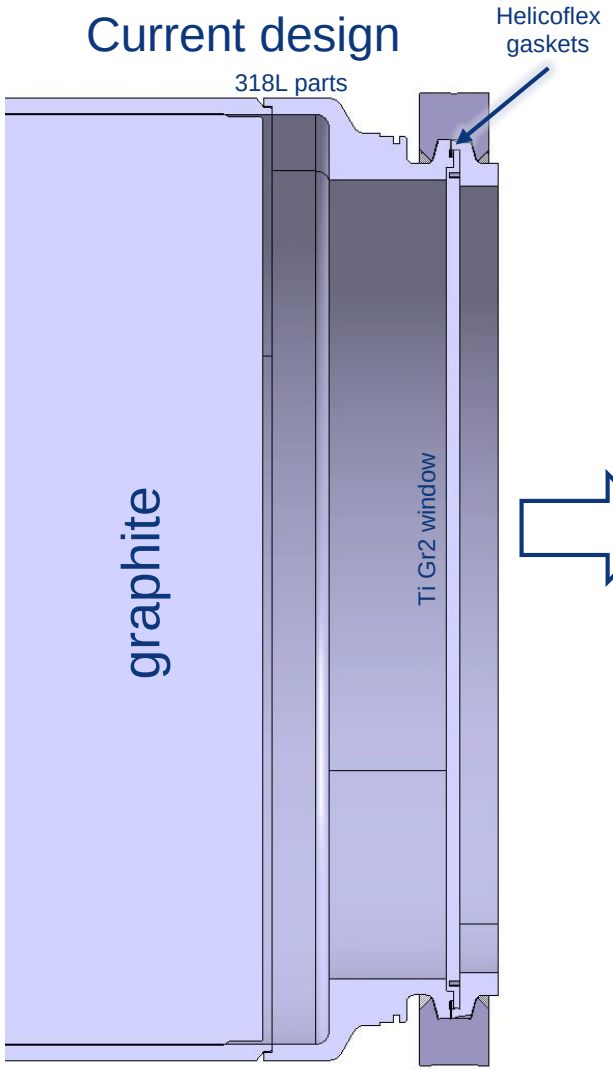

New proposed design

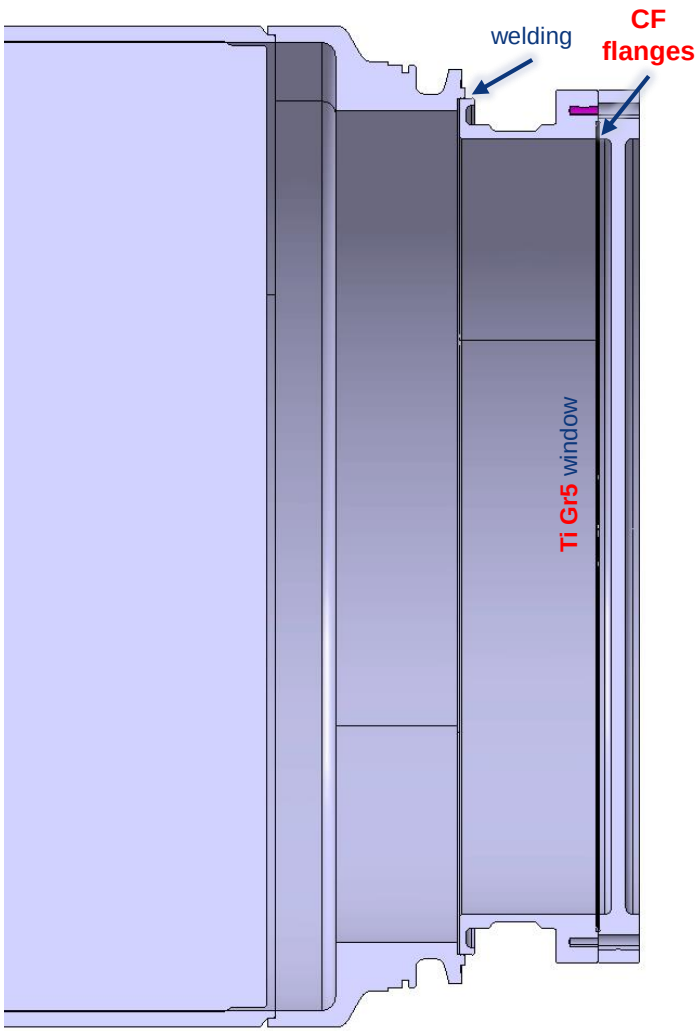

- No need for destructive work in the tunnel
- Welding of a new 318L flange on the existing 318L one
- Ti64 window screwed on the 318L assembly with ConFlat flanges

New TiGr5 window design

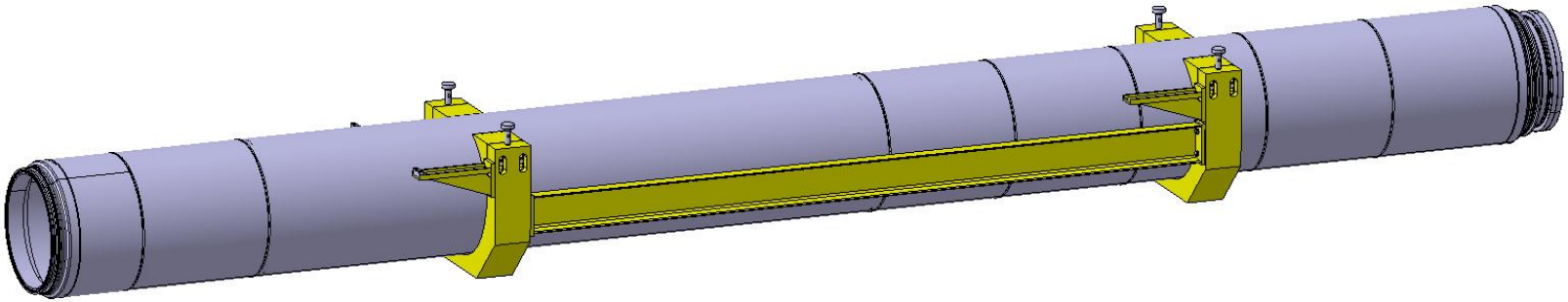

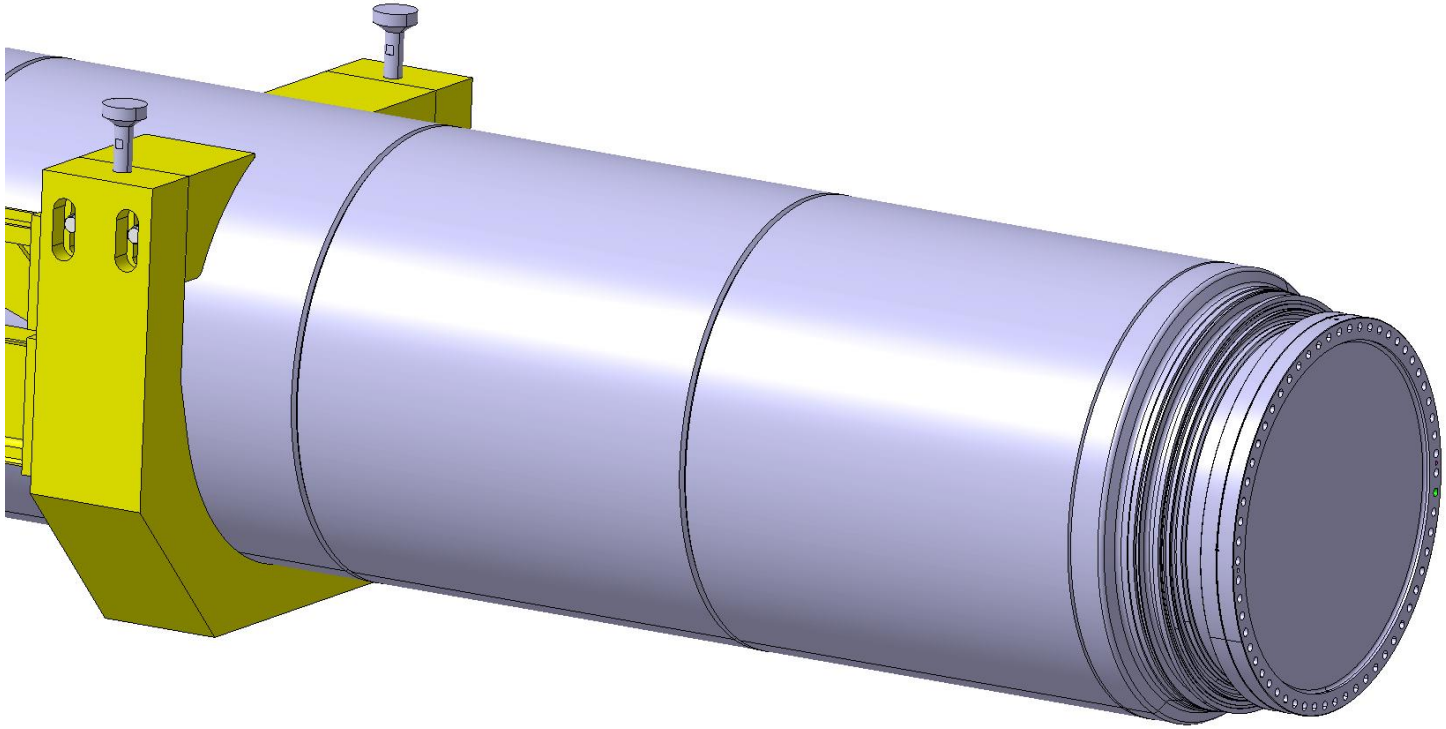

Proposed solution investigated for YETS17-18

- Modification UD68 spare core directly in the UD cavern – operational dump not touched!

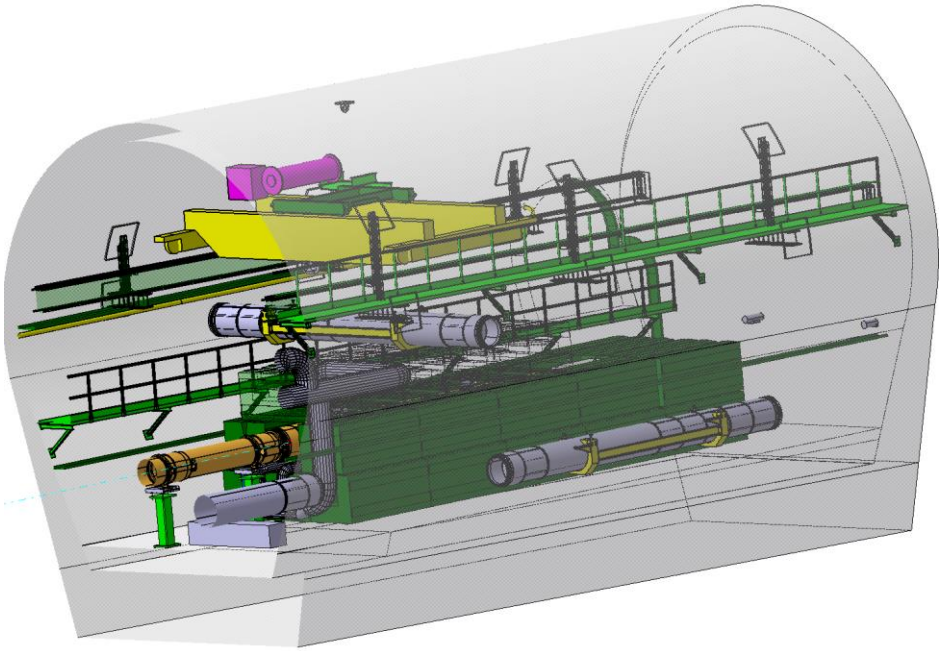

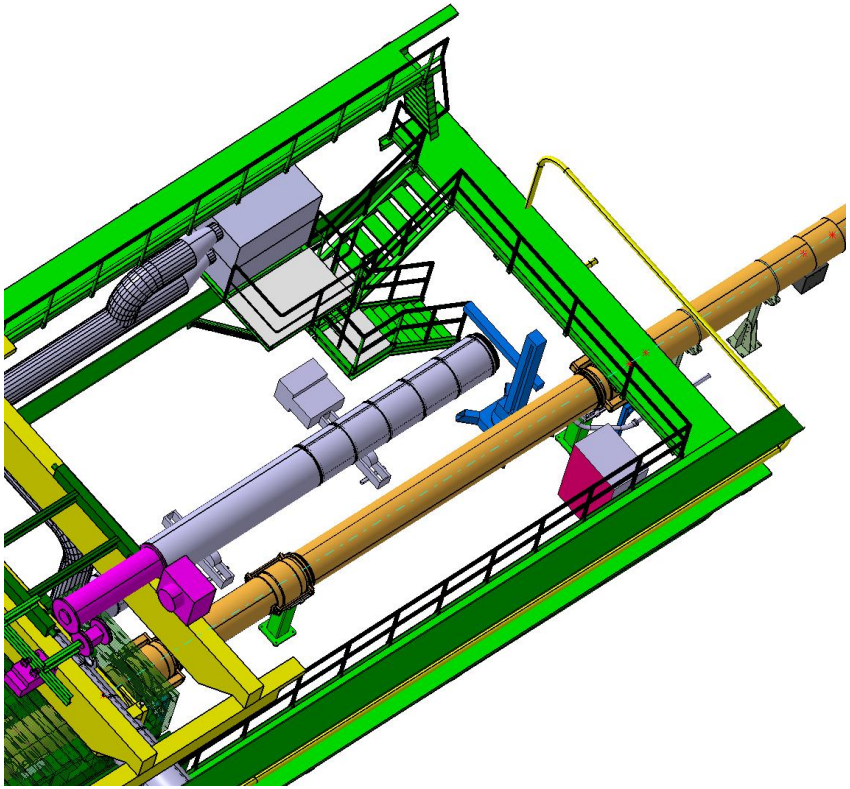

- Procedure being investigated:
  - Turn the dump by 180° in order to expose the downstream window at the end of the TD tunnel (lower DdD)
  - Installation of the dump in the turning gear
  - Remove the current TiGr2 window
  - Weld and assembly of the new **TiGr5** window
  - N_2 leak tests
  - Put back the dump in the original (spare) location
- Current dose rate max 100 μSv/h at contact (dominated by dose rate of operational core)
- Timeline: assembly in the UD towards mid-February + 2 weeks to complete

Instrumentation

- In the assumption that a modified spare core is installed in the machine, **active instrumentation** can be foreseen (currently operationally blind):
  - **Interferometers** (US#1/2) (already installed but out of service – to be repaired in YETS17-18)
  - **Fibre-optics based strain gauges** on the core (YETS17-18)

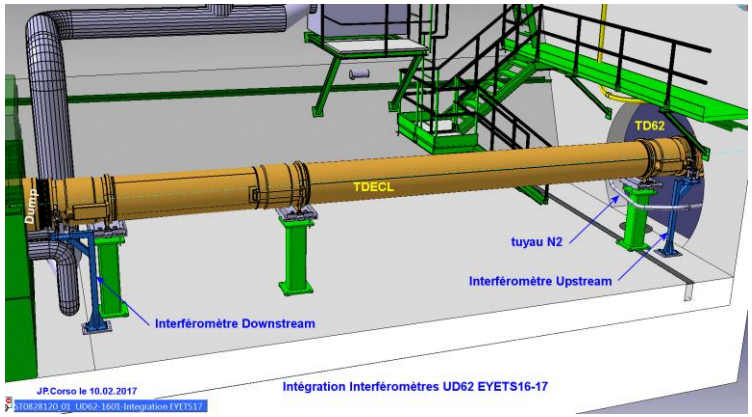

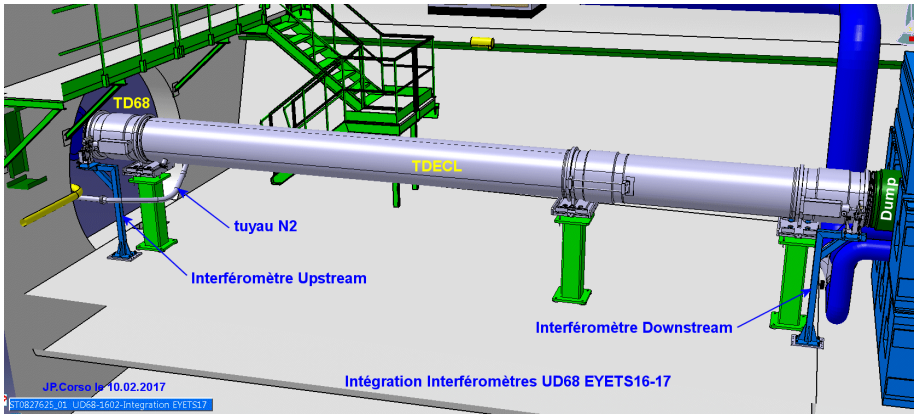

In-situ procedure

- Advantages:
  - No removal from the tunnel of cores
  - Avoid large transport on QRL
    (still welding material will have to pass)
  - No opening of shielding interfering with YETS activities

Status

- Procurement of 318L + TiGr5 flange ongoing
  - Machining and preparation of 318L and TiGr5 on the **critical path**, still to be validated pending the timely procurement of raw material
- Definition of welding procedure
- Definition of the WDP w/ RP (ongoing)
- Coordination with ACE on planning

Reasons to modify spares

- Evolution of the leak cannot be predicted
  - Leak detection on UD62 with N_2 and He proposed for YETS
  - Might be forced to run a dump in air
- UD68 dump leaking on back window, UD62 probably also (TS2 intervention non conclusive in this respect)
  - Source of leak not clear, could be gaskets damaged by fatigue
  - Not clear if fatigue is due to large number of total dumps or vibrations from more recent operational beams
  - Dismantling required to verify leak source (LS2)
- Not clear if the not-modified spares could start leaking due to 2018 beam operation

Proposed course of actions

- Install N_2 lines for both dumps
- Leave untouched the UD68
- UD62
  - Prepare the modified spare (with mentioned caveats)
  - N_2 leak detection
    - Depending of the finding (large leak prone to evolve further) decide on the installation of the modified spare. <u>No evidence today for a need to change the dump</u> <u>High probability that no intervention will be needed</u>
- No limitation for operation in 2018 if leak does not evolve or (modified) spare installed.

Procedure agreed by LMC 331

Conclusion

- 2017 LHC dump block operational year limited by:
  - Conservative assumption in graphite behavior when exposed to air
  - Significant leak in the UD62 dump DS window forced unforeseen replacement of N_2 bottles
- Perspectives for 2018:
  - Install N_2 lines for both dumps
  - Leave untouched the UD68
  - UD62 → Prepare the modified spare
- No limitation for operation in 2018 expected if leak does not evolve or (modified) spare installed

CERN

EN

ENGINEERING
DEPARTMENT

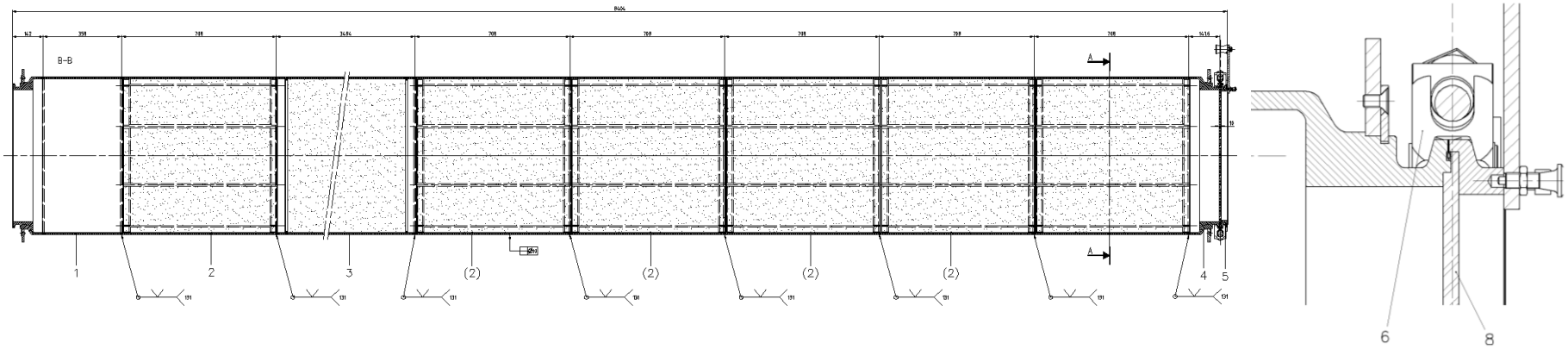

Current configuration – Ti2 window with helicoflex gaskets

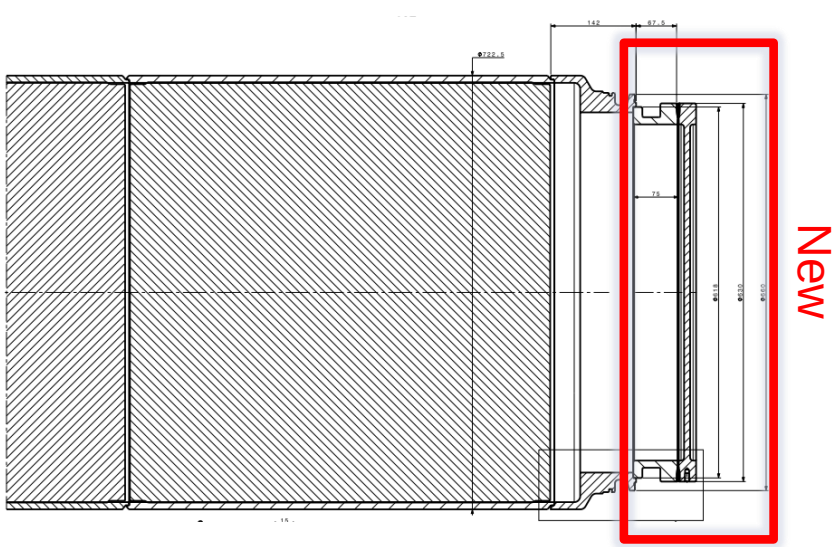

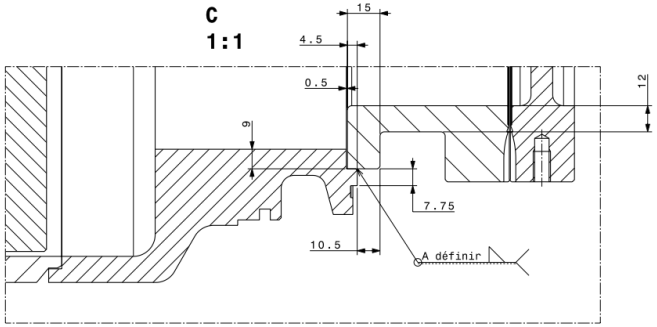

New proposed configuration – Ti5 window with CF gaskets