ATLAS pixel system upgrades in Norway

**Andreas L. Heggelund, Alexander L. Read, Heidi Sandaker,
Ole Røhne, Bjarne Stugu, Zongchang Yang**

**University of Oslo
University of Bergen**

ATLAS Pixel upgrade activities in Norway:

- 3D pixel sensor development, manufactured by the Norwegian research organisation SINTEF
- *Module construction preparations - not covered in this talk*
- Preparation for assembly on local support

Indtroduction and Background

- LHC upgrade to the High luminosity LHC (HL-LHC) by 2026
- The inner detector will be replaced by an all silicon detector called the Inner Tracker (ITk)
- Both strip and pixel detectors
- 3D pixel detectors planned for the inner pixel layers, L0 and L1, planar further out
- SINTEF sensors are candidates for the L0 region
- Currently developing a demonstrator of the outer pixel region, planar double and quad modules

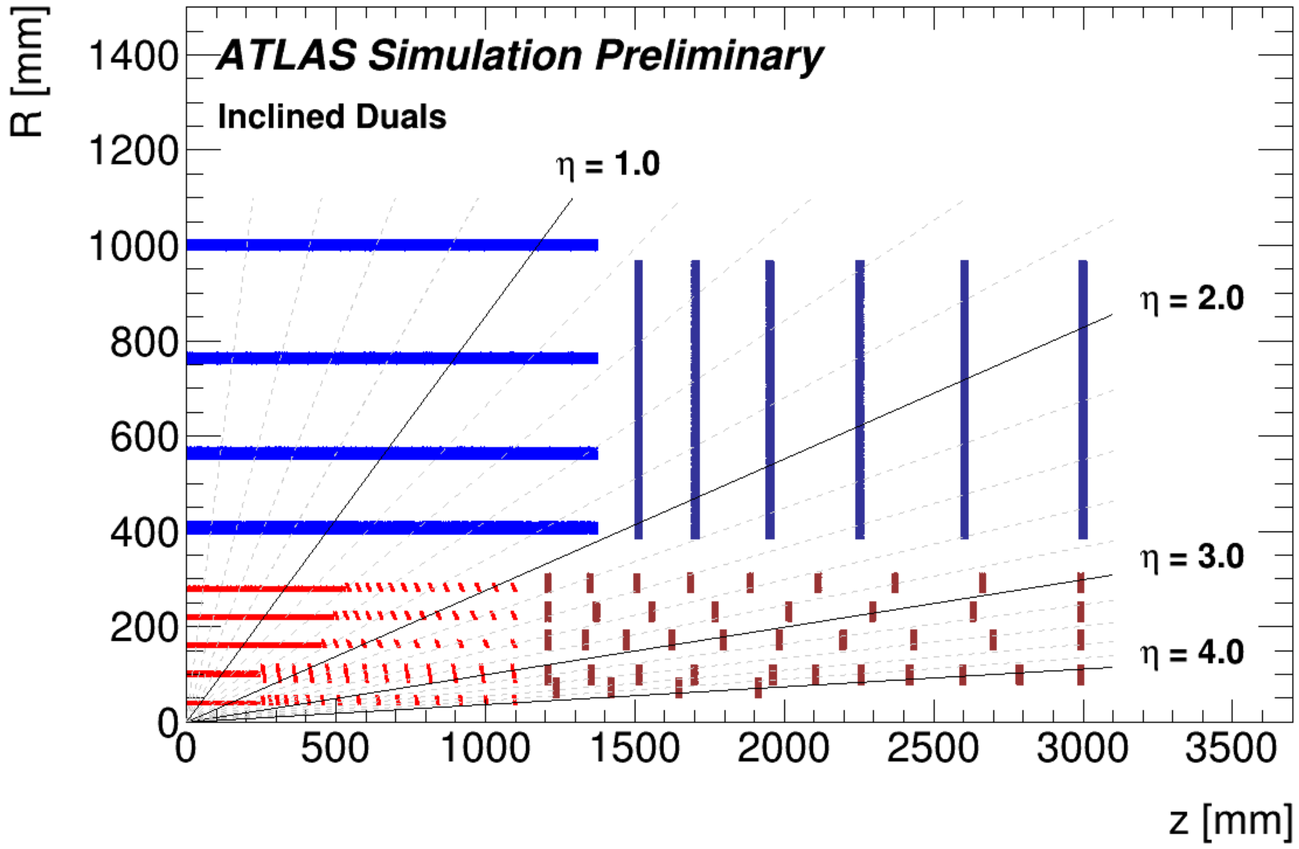

3D pixel detectors

- 3D refers to the different electrode design compared to planar pixel detectors
- Decouples the sensor thickness and electrode separation
- This leads to lower bias voltage requirements and higher radiation tolerance compared to same thickness planar
- BUT reduced efficiency at normal incidence angles

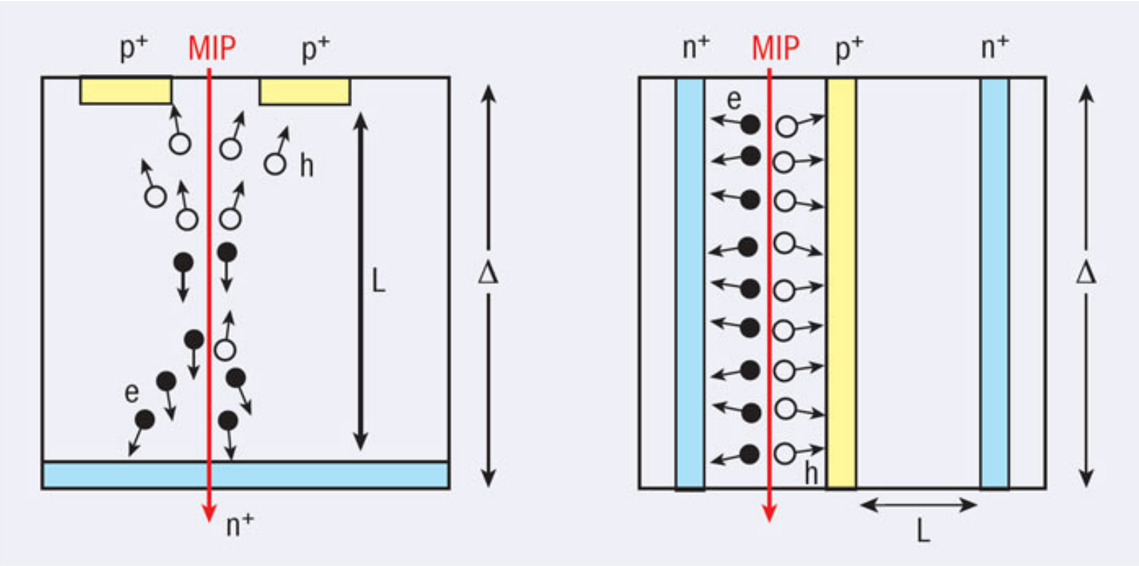

SINTEF 3D run 3 pixel sensors

- Four prototyping runs performed
- Full 3D with active edge, FE-I4 hybrid modules
- 250 x 50 um2 pixel dimension
- Tested 3 detectors in several testbeams, ~5V depletion voltage and 95-96% hit efficiency
- Low yield and further reduction of testable modules
- No radiation hardness study performed.

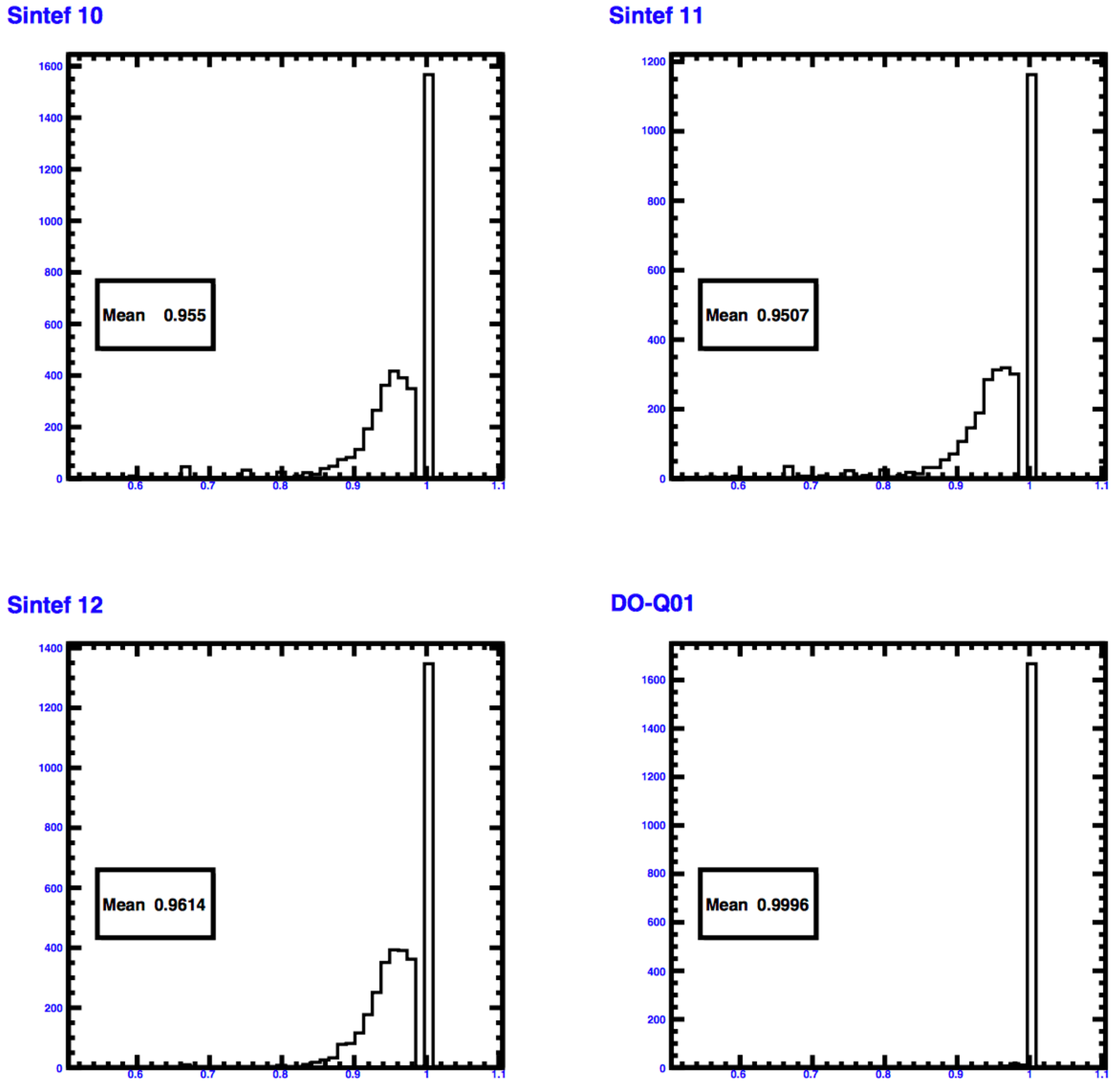

SINTEF run 3 performance

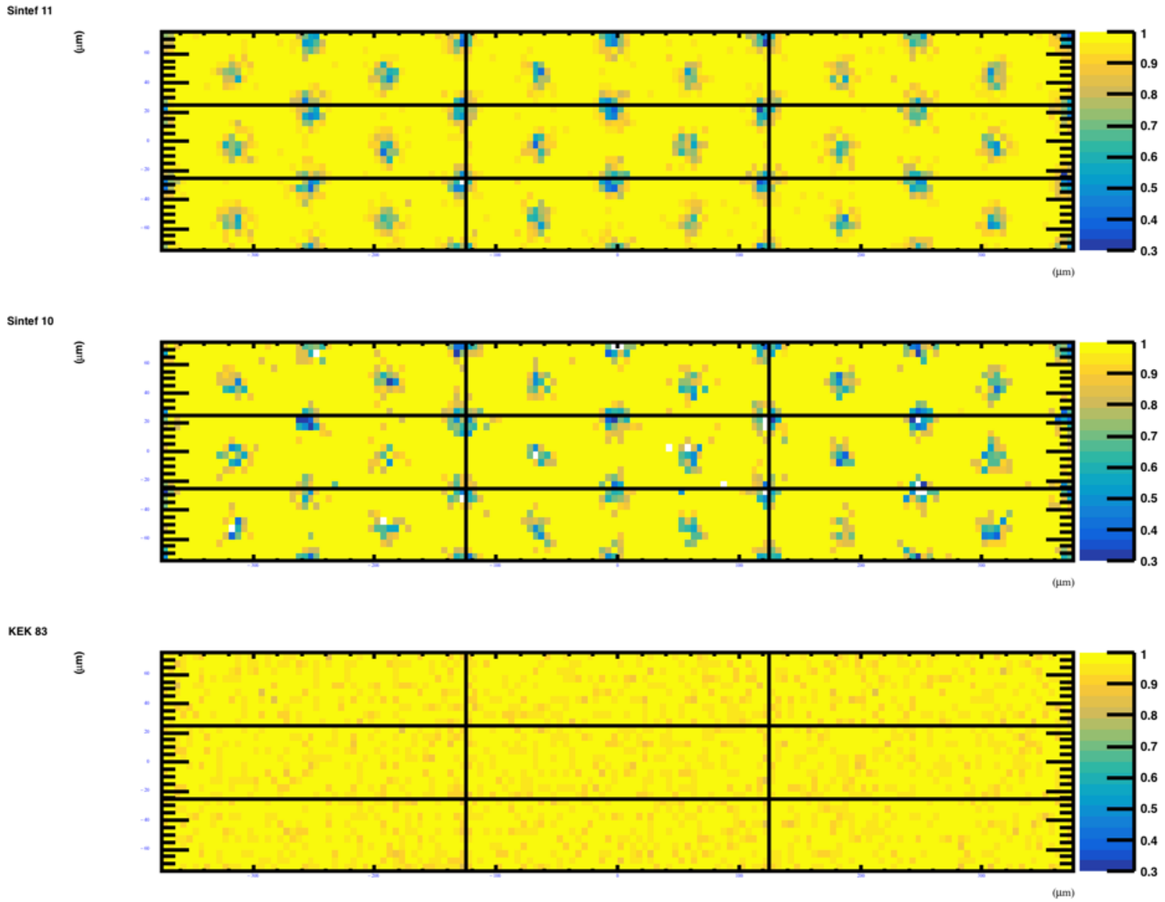

Efficiency collected in nine pixel cells

Data collected at testbeam in 2015

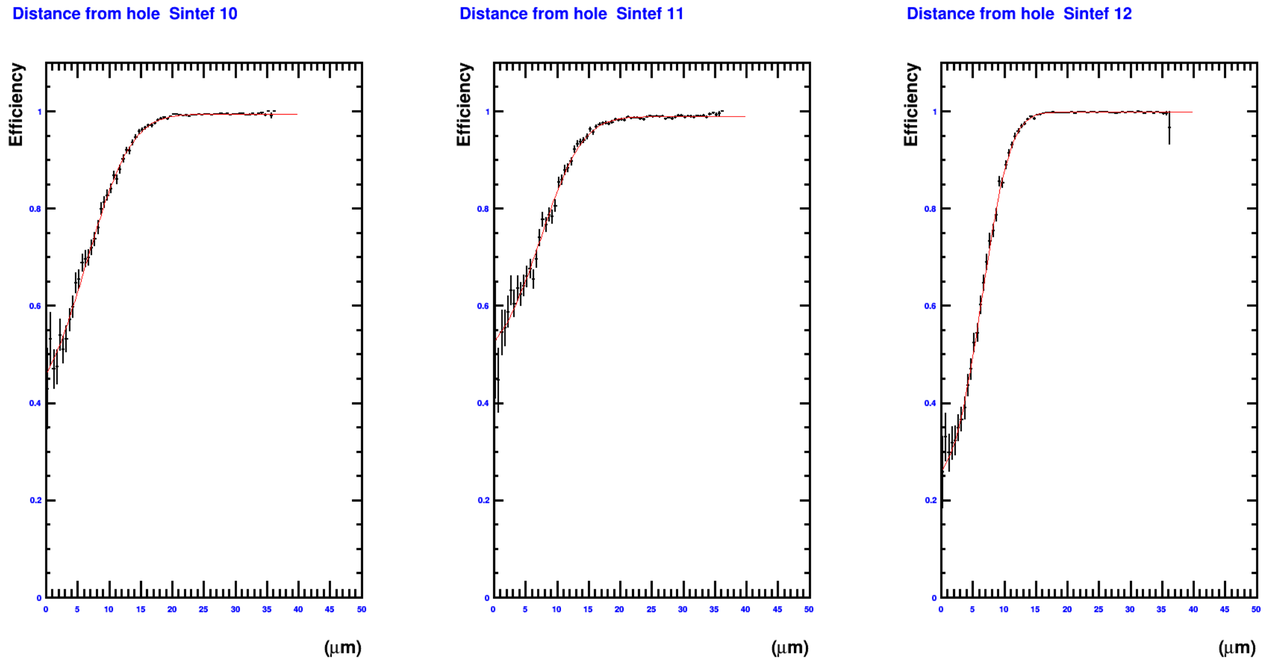

Efficiency as a function of distance from electrode

SINTEF 3D run 4 pixel sensors

- Run 4 is in the final production stages
- 50um and 100um active thicknesses
- A yield of ~70% for the FE-I4 sized sensors
- Being sent to IZM for flip-chip next week
- About to launch run 5, 100um and 150um active thickness (150um is according to ATLAS specifications)

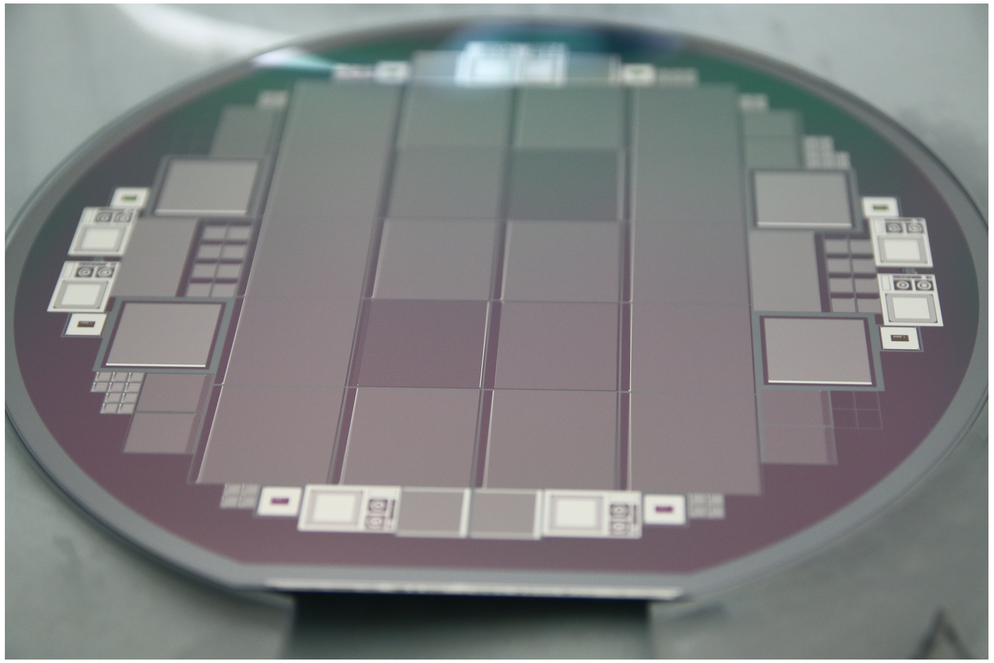

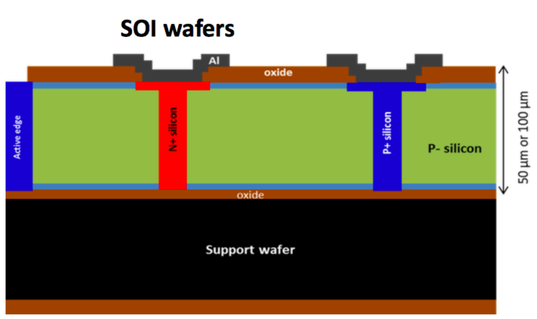

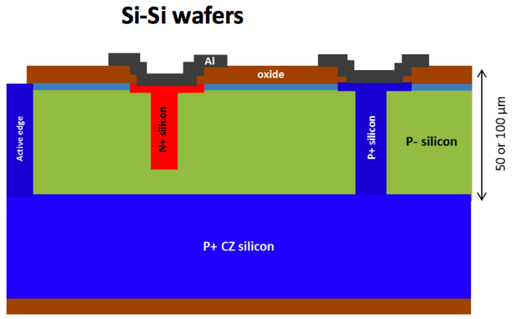

Demonstrator for outer barrel of pixel system

- Prototype of one stave of the outer pixel layers of the ITk.
- Done to validate design concept electrically, mechanically and thermally
- Goal: 1.6 m long longeron loaded with dual and quad modules
- Loading sensors onto cooling blocks -> clamping tool to hold modules in place while adhesive cures
- Total of 128 inclined dual modules and 56 flat quad modules on the final demonstrator

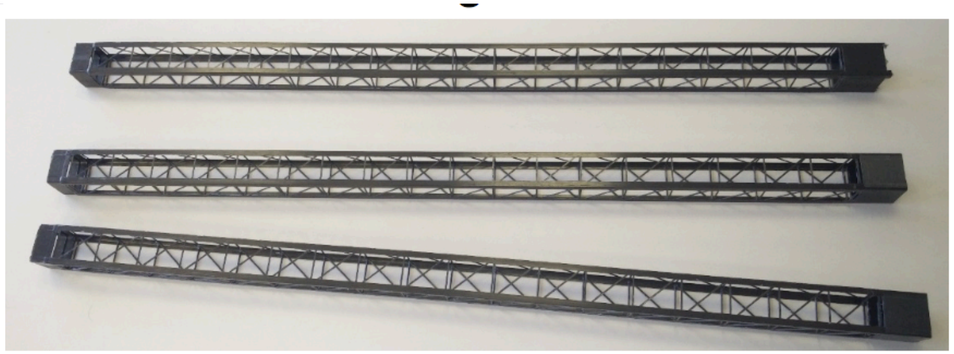

S. kühn, Demonstrator programme, ITK week presentation

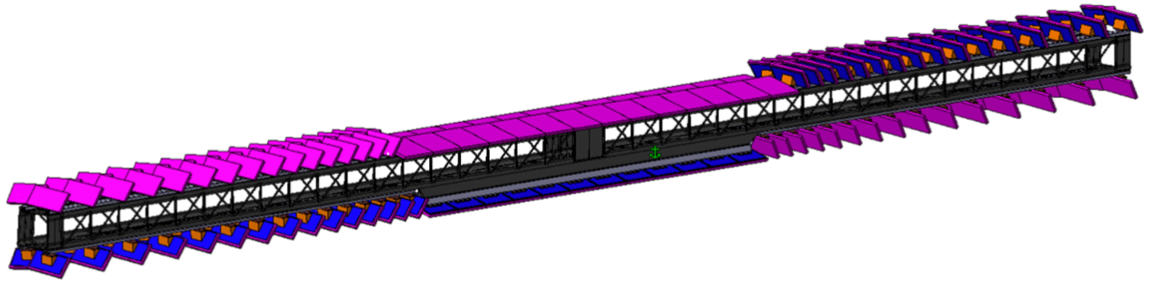

Demonstrator for outer barrel of pixel system

Steps to complete demonstrator

1. Load heaters and electrical modules + flexes on cell - **Done**
2. Build small integration prototype - **Done**
3. Small electrical structure (300mm long cooling line loaded with 7 x quad electrical modules) - **in progress**
4. Long thermal prototype
5. Thermo-mechanical prototype (functional demonstrator with 4 cooling lines)
6. Final demonstrator

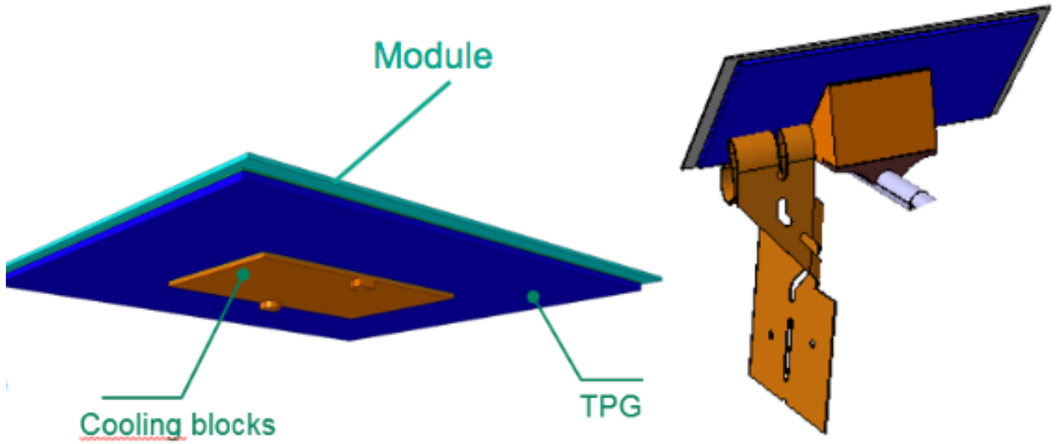

S. kühn, Demonstrator programme, ITK week presentation

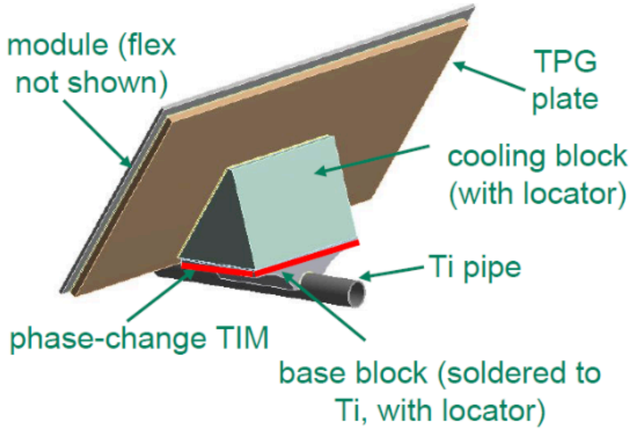

Demonstrator for outer barrel of pixel system

- Finish loading of modules onto the small electrical structure - 2 modules loaded
- Tests have started, full loading of the 7 quad modules and detailed testing targeting the ITk week in February

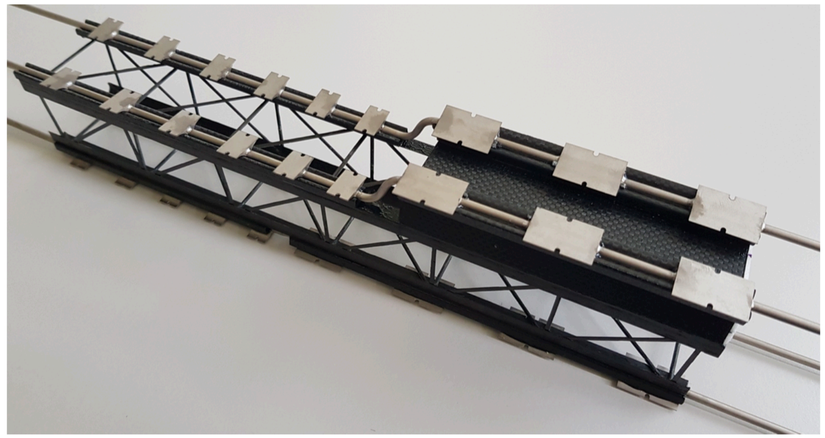

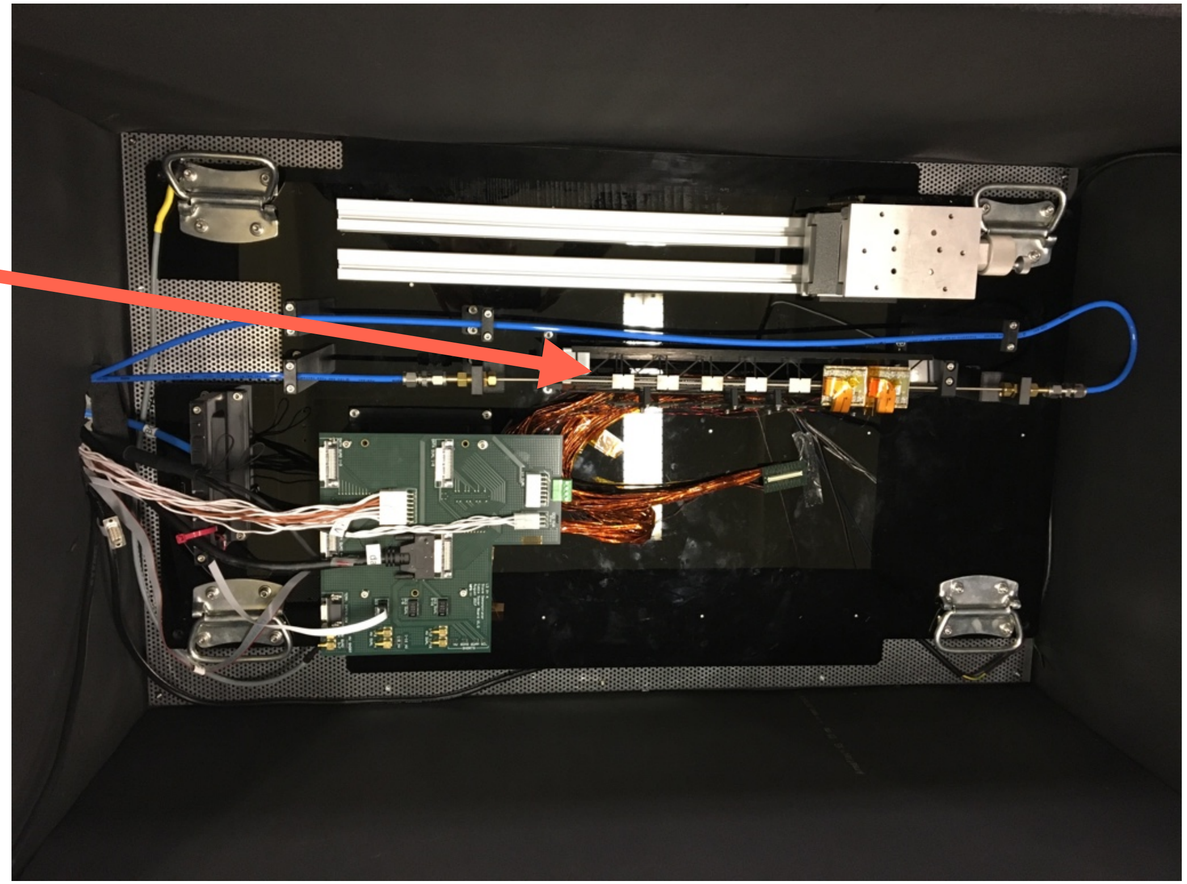

S. kühn, Demonstrator programme, ITK week presentation

Summary

- Ongoing fabrication of 3D pixel modules in Oslo, so far promising news from SINTEF
- Sensor wafers being sent to IZM next week
- Large effort at CERN to build the first ITK demonstrator, so far successfull tests of the serial powering scheme
- The small electrical structure is starting to take shape

Thank you!