International Workshop on Breakdown Science and
High Gradient Technology (HG2018)
June 4-8 2018 Shanghai, P. R. China

Design of high gradient LINAC with the new "Gasket-Clamping" technique and compact low pulsed heating couplers

Fabio Cardelli
INFN-LNF, Frascati, Italy

With the contribution of:
D. Alesini, V. Lollo, INFN-LNF, Frascati, Italy

INFN LNF
Istituto Nazionale di Fisica Nucleare

fabio.cardelli@lnf.infn.it

Outline

- Gasket-Clamping fabrication technique
- **BOLT Project: Design and realization of a LINAC prototype implementing the gasket clamping fabrication technique**
    1. Electromagnetic design
    2. Mechanical design and assembly procedure
    3. Vacuum test on sigle cell
- **New compact low pulsed heating coupler studied @INFN-LNF**
    1. Ultra-Fast C-band RF Gun
    2. Coupler proposal and preliminary results
- Summary and future work

«Gasket-Clamping» fabrication technique

The accelerating structures generally are realized by a **brazing process**, but this:

⇒ requires large vacuum furnaces
⇒ is very expensive
⇒ poses a not negligible risk of failure
⇒ at the end of the process the copper is "soft"

Avoiding it should be possible to decrease the BDR and reduce the conditioning time.

New technology developed at INFN-LNF called **«Gasket-Clamping» fabrication technique** [1] that does not involve any brazing step

Use of **special RF/vacuum Gaskets**:

- Machined components joined by screws
- Copper gasket compressed of 0.2 mm after clamping
- Simultaneously guarantees **the vacuum seal and the RF contact** avoiding sharp edges and gaps

brazing process of ELI-NP C-band structure @ INFN-LNL

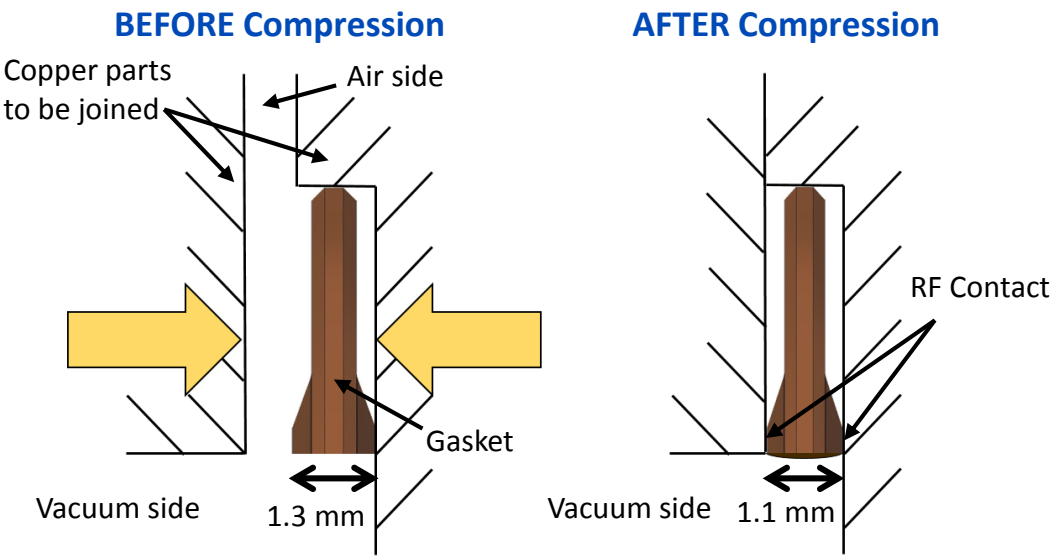

[1] Int'l patent application PCT/IB2016/051464, D. Alesini et al. ''Process for manufacturing a vacuum and radio-frequency metal gasket and structure incorporating it'' assigned to INFN

«Gasket-Clamping» fabrication technique (II)

This technique has been succesfully used for the realization of:

- An **RF Gun prototype** currently in operation **at UCLA** since three years at low rep. Rate (90 MV/m, 5 Hz) [2]
- The **ELI-NP RF electron gun** that has been tested at full power (120 MV/m, 14 MW input power, 1.5 us @100 Hz) at Bonn University [3]

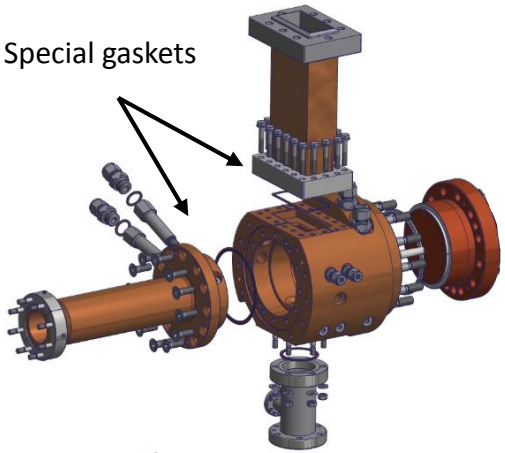

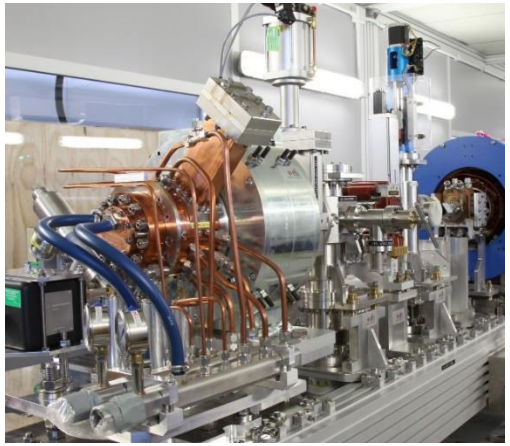

Extension of this technique for the realization of an entire Linac structure (S/C/X band)

In [4] has been proposed and discussed the realization of a 10 cell TW accelerating structure to study the feasibility of this application. In 2017 starts the **project BOLT (Backthrough On Linac Technology)** that has been **funded by the INFN CNTT.**

INFN LNF Istituto Nazionale di Fisica Nucleare

[2] D. Alesini, *et al.*, PRST- AB 18, 092001 (2015)
[3] D. Alesini *et al.*, " High Power Test Results of the Eli-NP S-Band Gun Fabricated With the New Clamping Technology Without Brazing", presented at the 8th Int. Particle Accelerator Conf. (IPAC'17), Copenhagen, Denmark, May 2017, paper THOBB1
[4] F. Cardelli *et al.*, proceedings IPAC16, Busan, Korea, May 2016, MOPMW005.

Linac with gaskets: prototype design

In the framework of the upgrade of the FERMI Linac at the ELETTRA Laboratories (Trieste) an high gradient S-band prototype has been realized [5]. In order to make a comparison between a brazed and an hard-copper clamped structure, we decided to realize a similar to the «FERMI» layout. The prototypes have a symmetrized model layout:

FERMI layout

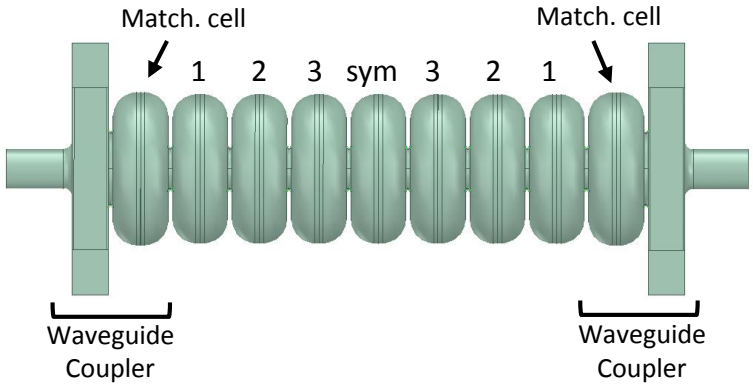

BOLT layout

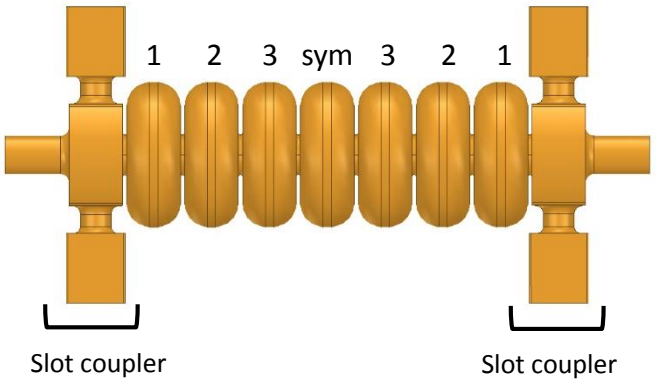

To implement the gasket clamping fabrication technique and also lower the realization costs we need to consider some design choice that influence directly the electromagnetic design:

- **Use of magnetic coupling (MC) coupler with a racetrack slot**
  - The implementation of a waveguide coupler (EC) with gaskets at the coupling cell is under study.

- **Internal edge roundings of the cells** have been used to tune the cells at the right frequency
  - The cell radius is kept constant along the structure and this allows to use the same type of gasket to join all the cells -> lower realization cost for the gaskets.

[5] C. Serpico, et al., “High gradient, high reliability, and low wakefield accelerating structures for the FERMI FEL”. In: Review of Scientific Instruments 88 (2017).

Linac with gaskets: cell analysis and tolerances

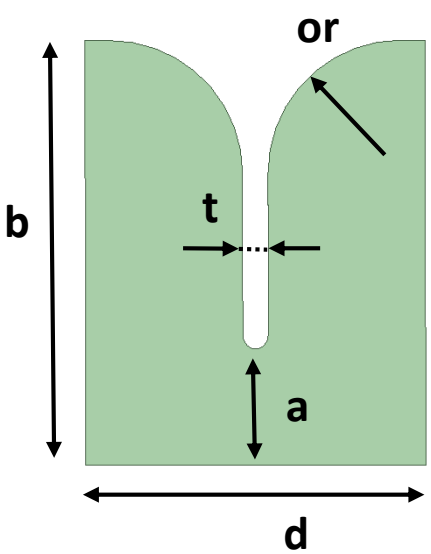

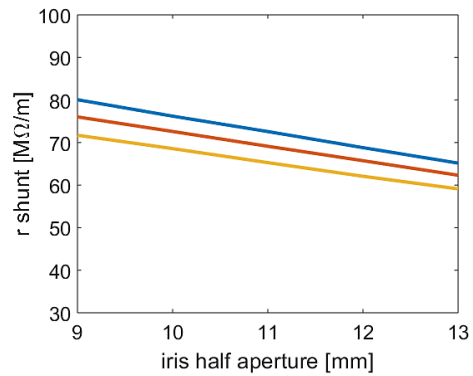

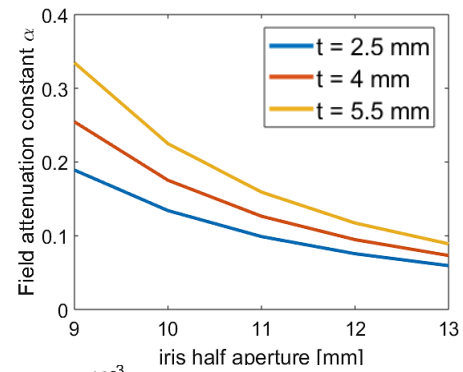

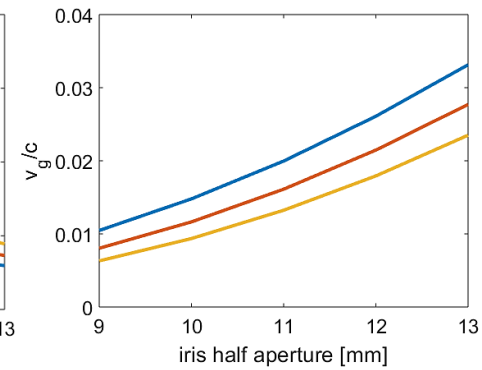

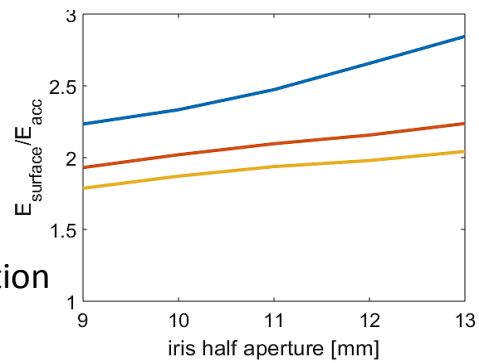

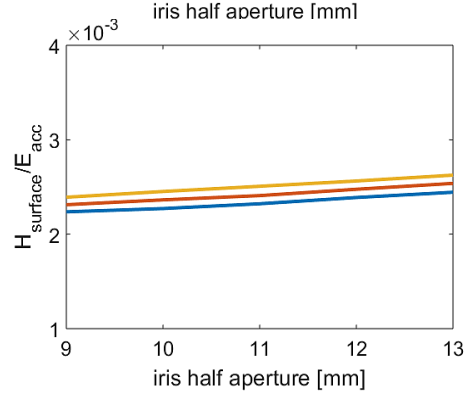

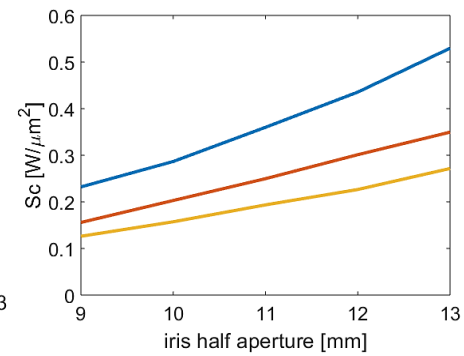

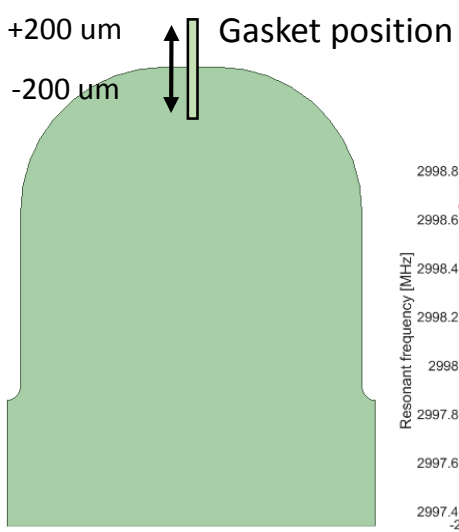

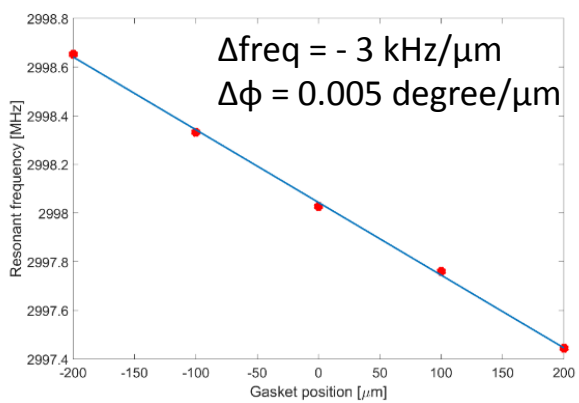

Parameter	Cell Phase advance [degree/um]	Frequency Shift [kHz/um]
b	0.14	- 79
a	- 0.04	20
t	- 0.014	7.6
d	0.015	- 8.6
or	- 0.05	28

Linac with gaskets: coupler design

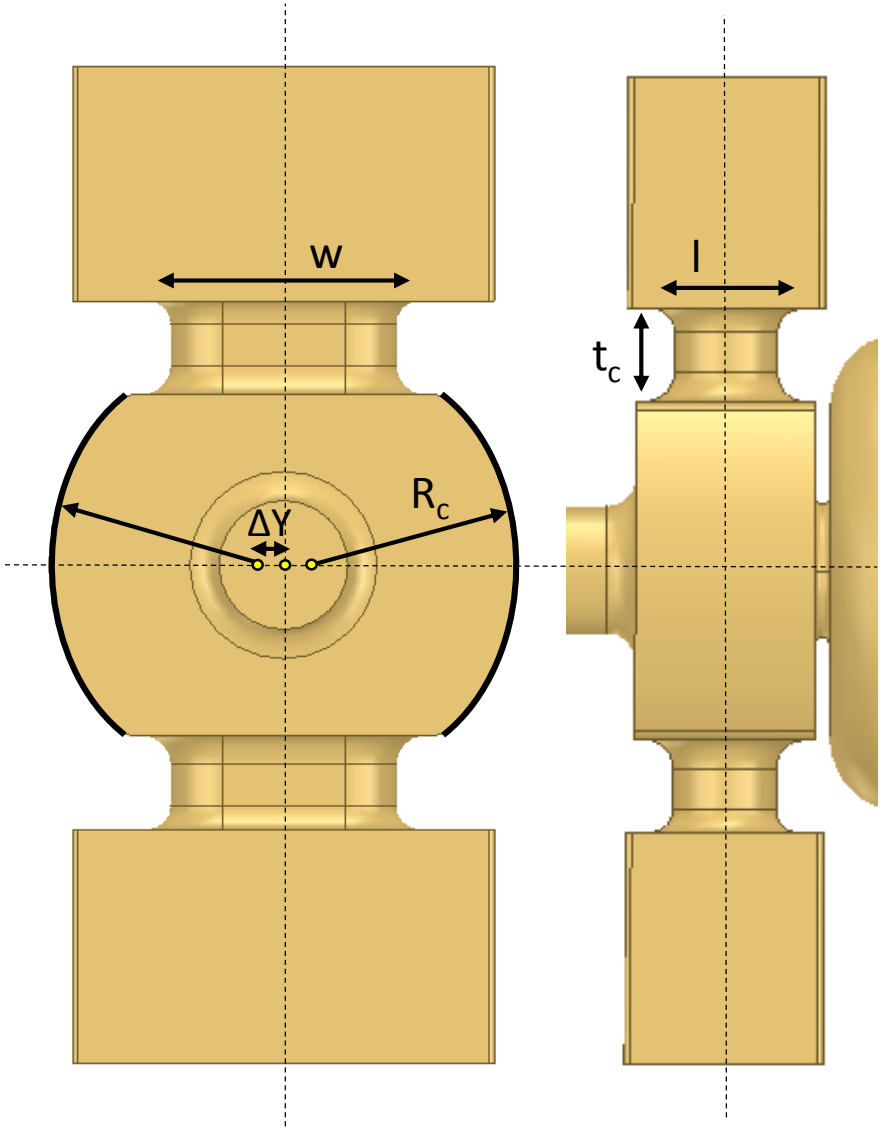

- **Slot coupler** with MC that
  → ease the GC technique implementation
- **Double feed**
  → no dipole magnetic field component
- **Racetrack shape**
  → compensation of the quadrupolar component
- **Coupling holes with strongly rounded profiles**
  → surface fields and pulsed heating reduction

Coupler tuned with the **short circuit method**[6], in order to minimize the S11, have flat E field and constant phase advance per cell.

S11 coupler

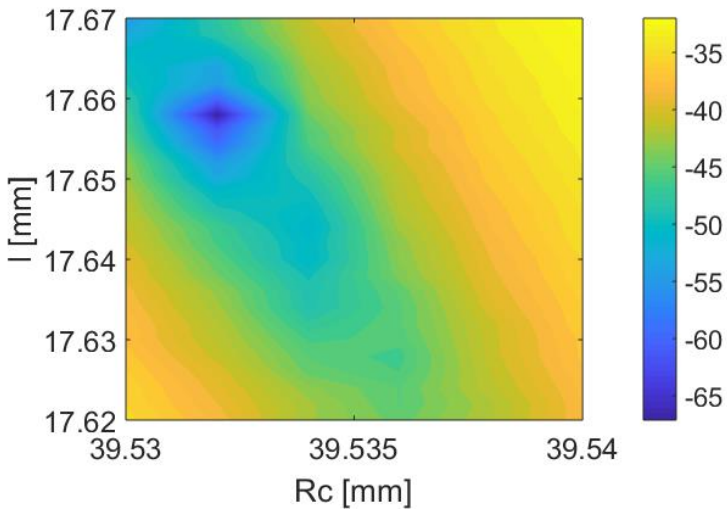

[6] D. Alesini et al., Nucl. Instrum. Methods Phys. Res. A **580** (2007) 1176–83. .

Linac with gaskets: coupler design (II)

- **Quadrupole field components**

The azimuthal magnetic quadrupolar field component along an arc of r=5mm at the center of the coupler have been considered in figure. A fine compensation of the quadrupolar component has been performed, acting on ΔY.

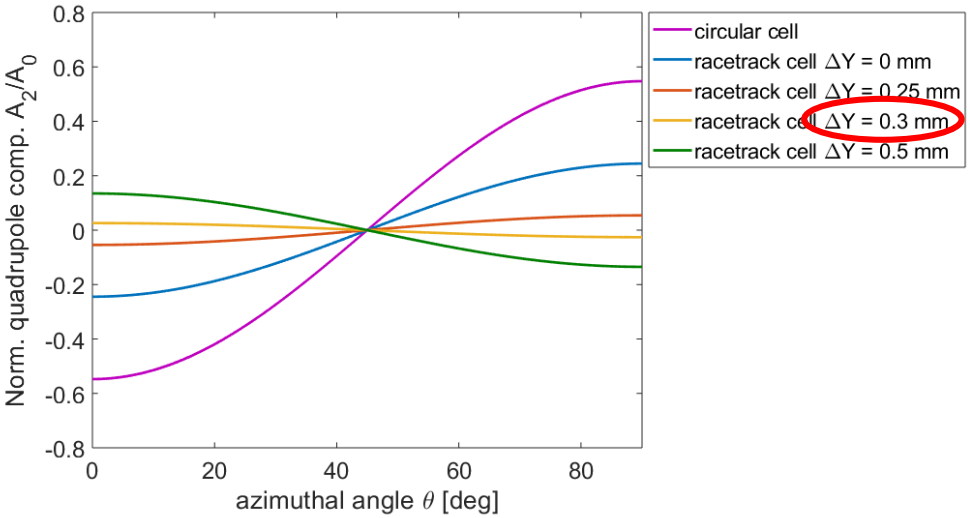

- **Surface fields and pulsed heating evaluation** @ $P_{in} \approx$ 65MW, 30MV/m

E_{surf} = 80 MV/m max on the first iris
H_{surf} = 180 kA/m max on the coupler

Sc = 0.8 W/μm^2 max on the first iris
$\rightarrow BDR = 10^{-12} bpp/m$ (t_p=1μs)

ΔT = 7°C with 1μs pulse length
10°C with 2μs pulse length

H_{surf} [A/m]

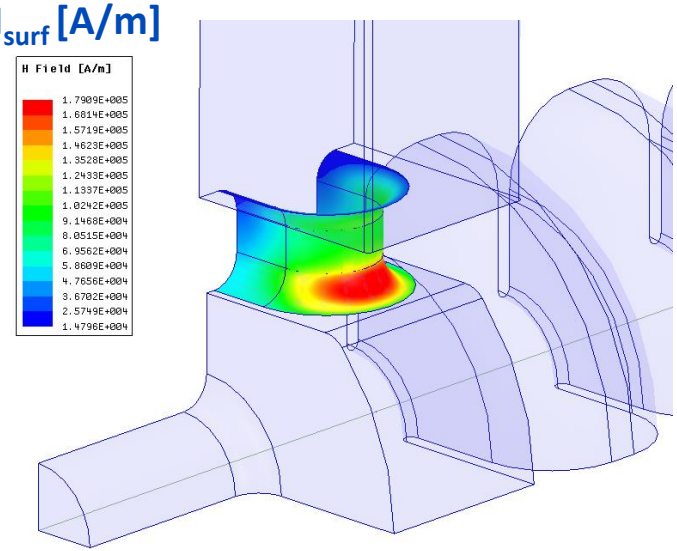

Linac with gaskets: Electromagnetic results

Parameter	Value
fres	2998.01 MHz
mode	2π/3
Cell length	33.332 mm
Total prototype length	415 mm
N° cells	7+2 (coupler cell)
Q_0	≈15900
v_g/c	2.2 %
r shunt	72 MΩ/m
Working Temp.	35 °C
$E_{acc}/\sqrt{P_{in}}$	3.6 $MV/m/\sqrt{MW}$
Pulsed heating	$\approx 10°C$ @ $2\mu s$ pulse length, 65MW Pin

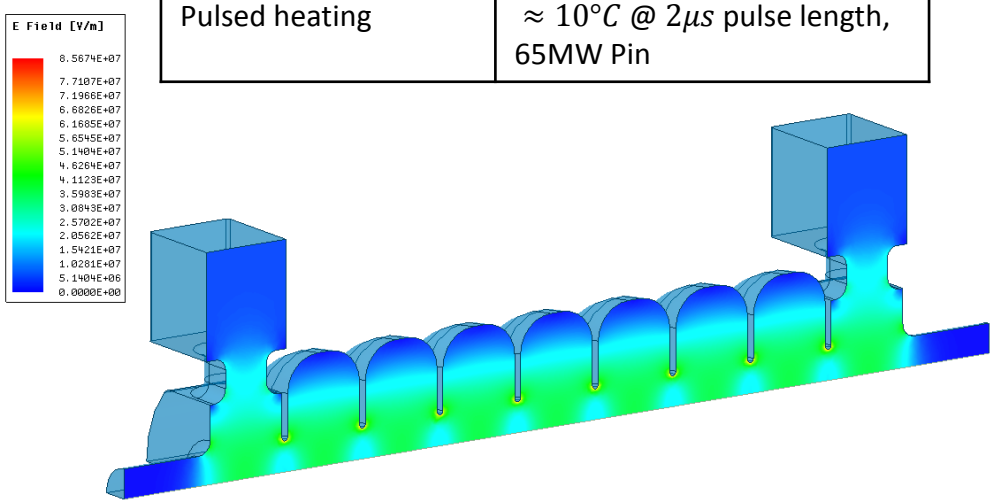

Amplitude and **Phase** of the Electric field along the axis of the structure

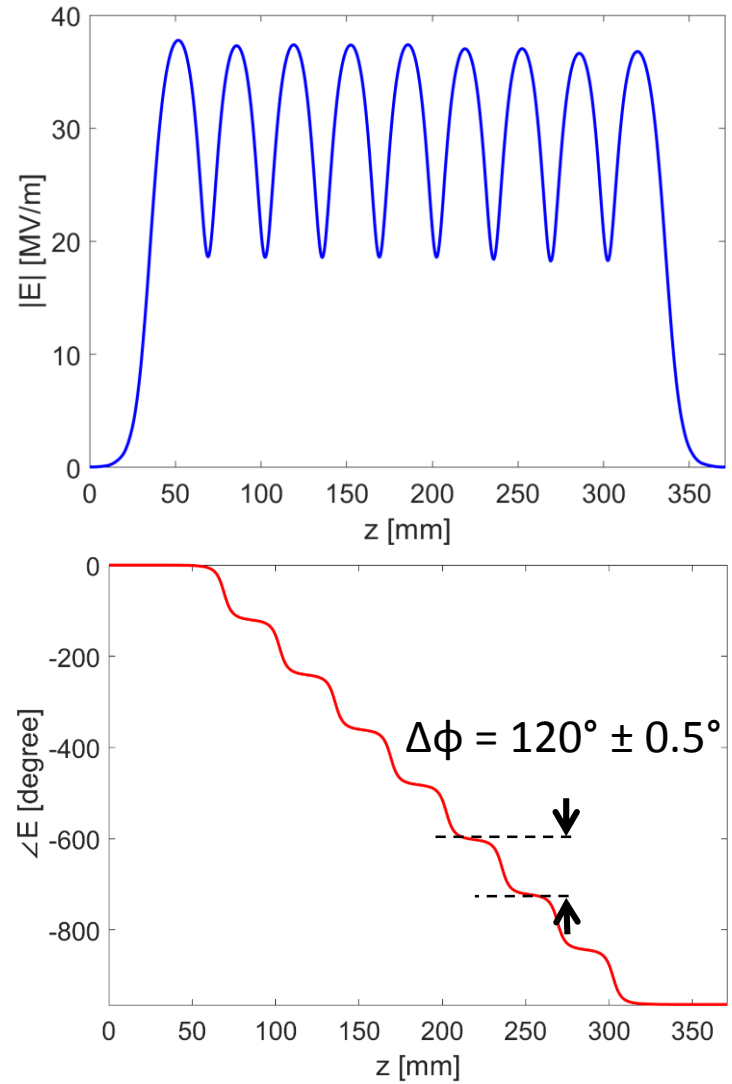

Linac with gaskets: mechanical design

In the overall design a continuous **feedback between the electromagnetic design and the mechanical model** has been necessary to match electromagnetic and mechanical constraints.

The structure is composed by the input and output couplers, six cell structures and two half cells.
Each cell has eight screw holes disposed at 45° to one another to **provide homogeneous force on the gasket** when the cells are clamped together.
Each part will be **fabricated from cylinders of Oxygen Free High Conductivity (OFHC) copper** using high precision lathe and milling diamond machines. Nowadays mechanical design has been finalized and the realization has been assigned to an italian company.

Cell structure

Front view **Back view**

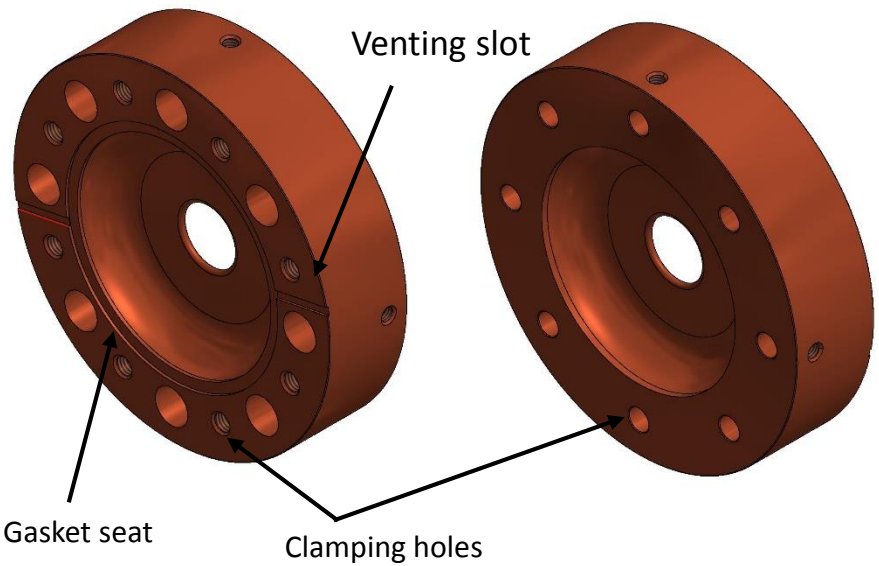

Input/Output coupler

Back view **Front view**

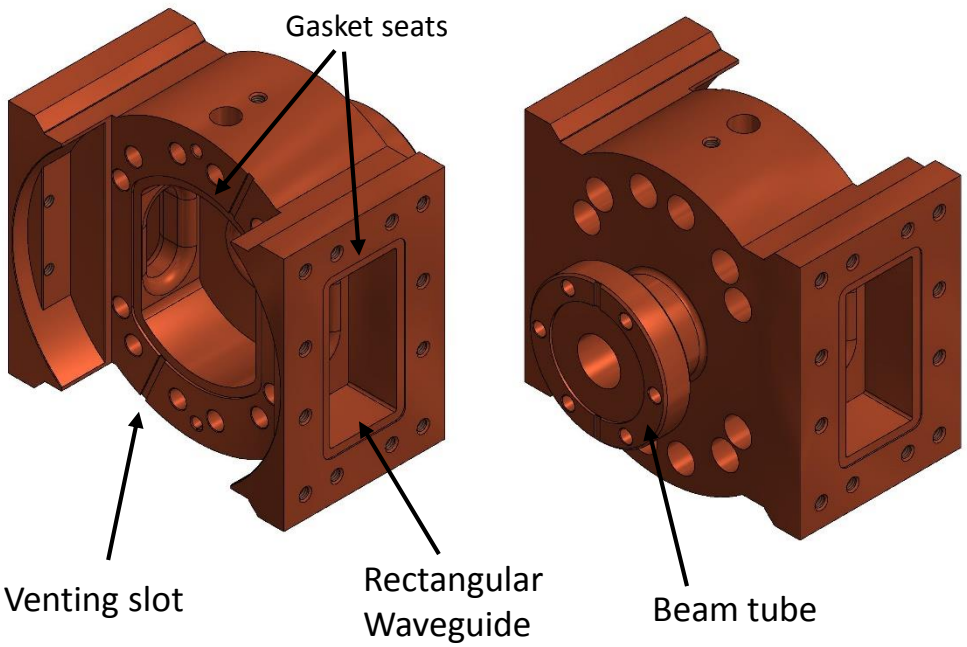

Mechanical design with Autodesk Inventor.

Linac assembly procedure: Phase I

The assembly procedure is divided into 3 different phases.

The structure will be assembled starting from the first half cell **stacking up one cell after the other**, inserting the gaskets between them and **fixing each part with the previous one by screws**, up to the second half cell.

At each step of assembling a vacuum leak test of the joint will be done to test the correct and uniform compression of the gasket.

An **alignment prism** will be used in this phase to guarantee the cell alignment.

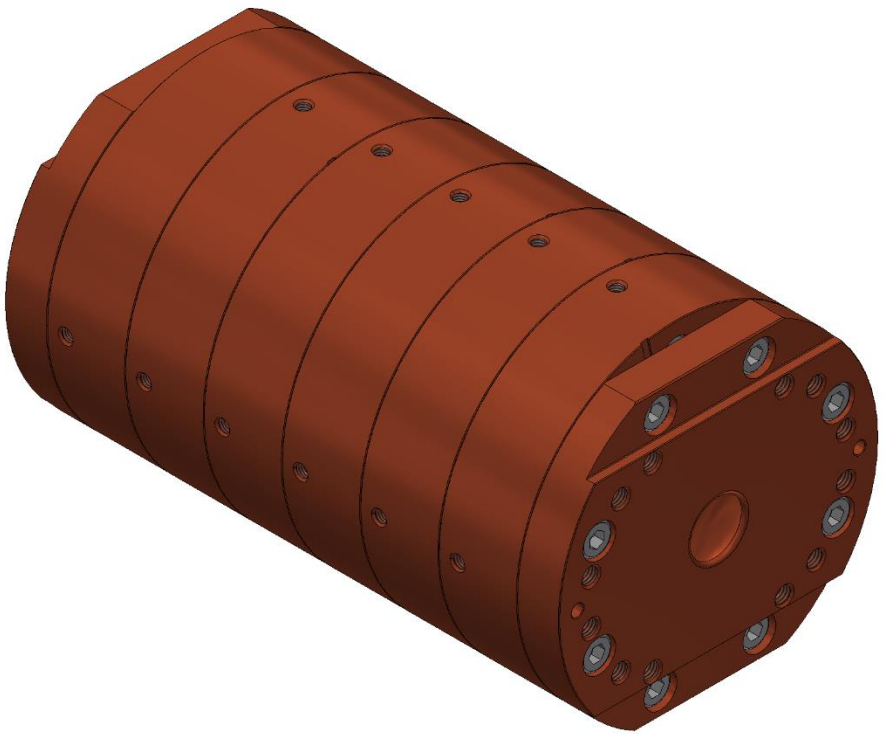

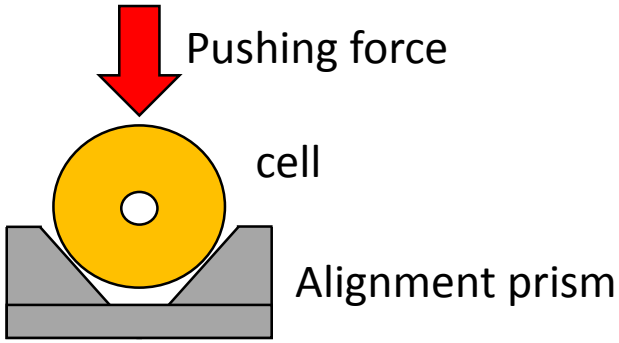

Linac assembly procedure: Phase II

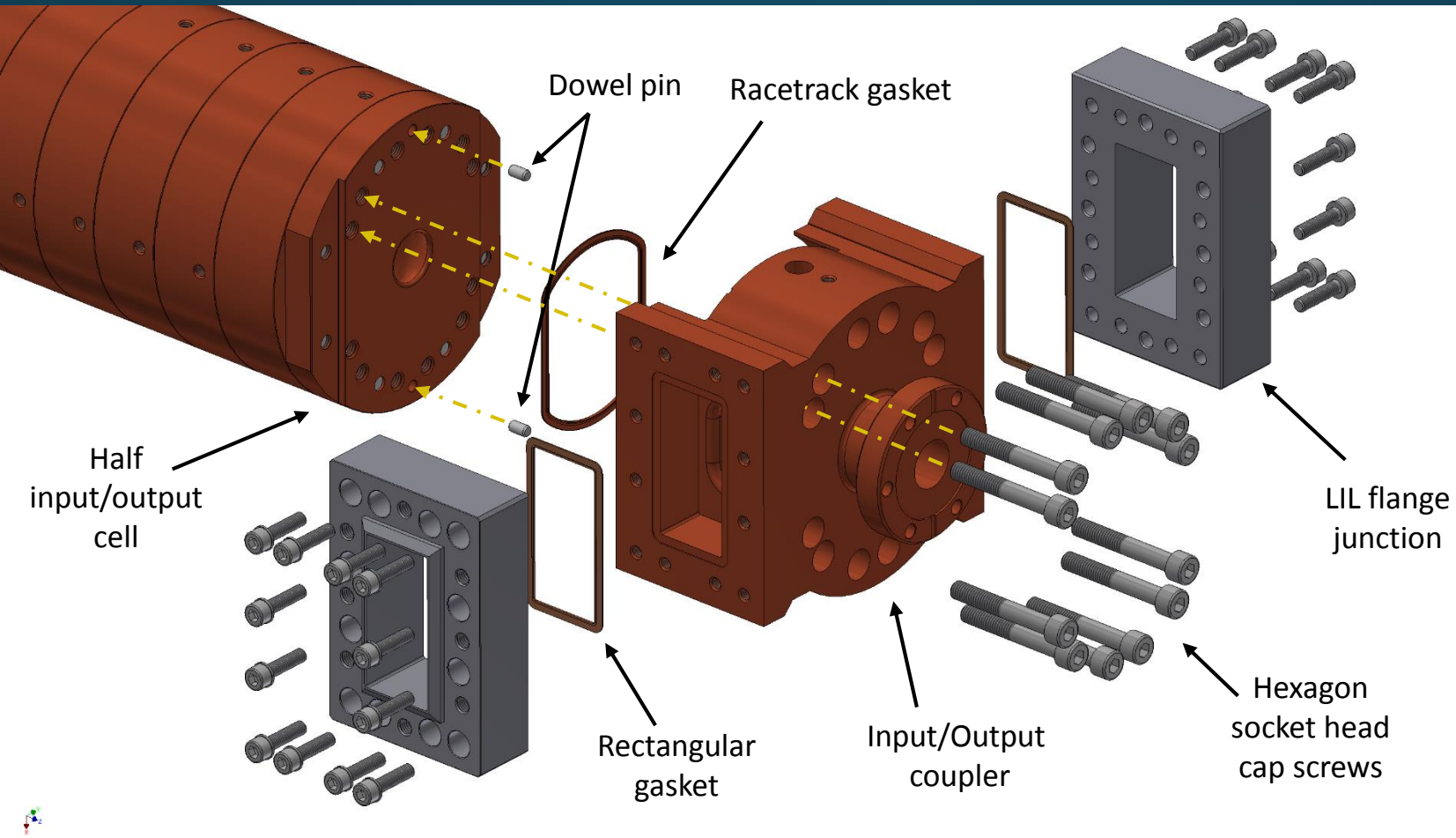

Each coupler is completed by two LIL flange junction, made of steel, that are connected by rectangular copper gaskets. The fine alignment of the two couplers is guaranteed by two Dowel pin.

The proposed setup for assembling give the possibility of coupler replacement re-opening the structure and changing the gasket.

Linac assembly procedure: Final configuration

The presence of the screws around the cells limit the available space so for convenience an external cooling system has been designed for the prototype.

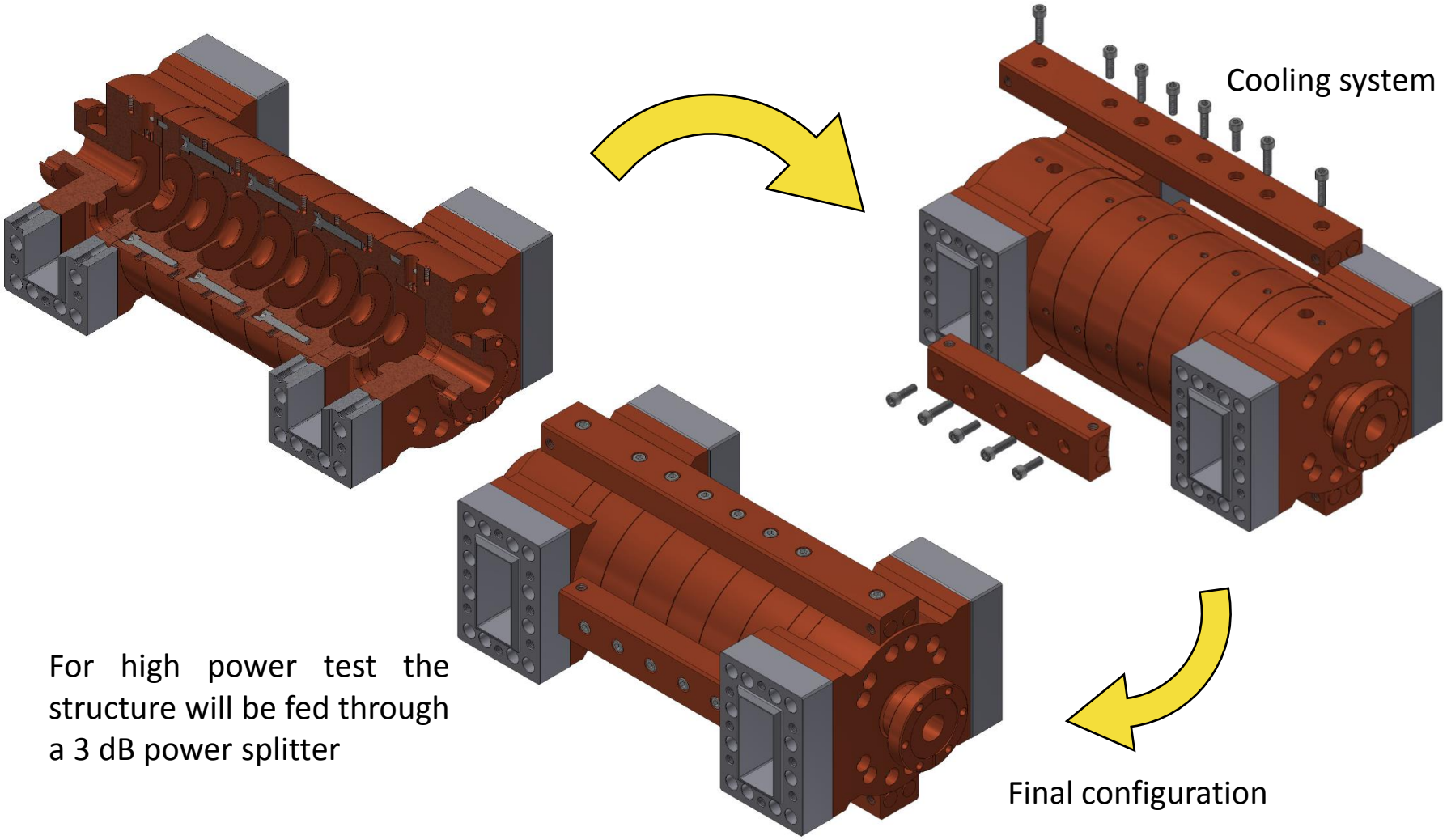

For high power test the structure will be fed through a 3 dB power splitter

Vacuum test on a single cell clamped

Vacuum leak test:
A leak test has been performed after the connection of the two half cells, with a He sensitivity lower than $1.6 \times 10^{-9}\, mbar \cdot l/s$ and no leaks have been detected. The test has been repeated after gasket replacement and different baking cycle have been performed with the two gaskets:

Circular gasket realized by Tecno Alarm

Realized at INFN Roma1 workshop

First gasket:
- 2x baking thermal cycle @120°C for 10 hours

Second gasket:
- 4x baking thermal cycle @120°C for 10 hours
- 2x baking thermal cycle @150°C for 10 hours
- 2x baking thermal cycle @200°C for 10 hours

Leak tests have been repeated during the baking and once after the cell cooling @24°C.

A final leak test after the baking was achieved with a He sensitivity 1.2×10^{-10} mbar $\cdot\, l/s$ and no leaks have been detected.

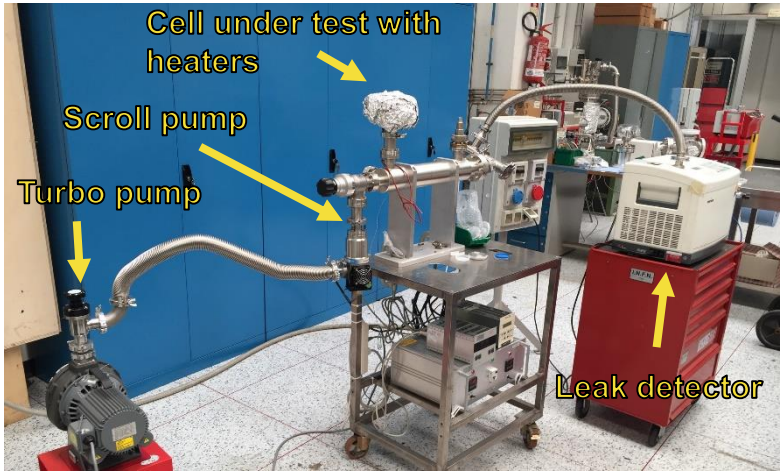

Tuning test of Hard Copper cell:
4 tuners with different thickness from the internal wall
1 mm, 1.25 mm, 1.5 mm, 1.75 mm
→ 500 kHz of Δf_{req} with 1-1.25mm

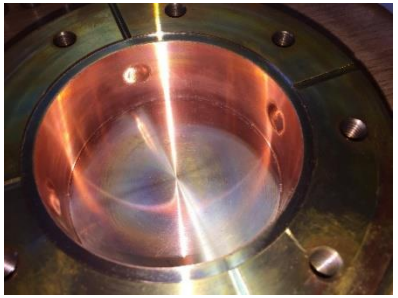

Ultra-fast C-band photocathode gun

In the framework of the **XLS Compact Light** collaboration – **WP3: Gun and Injectors** activities @INFN-LNF an **Ultra Fast C-band photocathode gun** with high peak electric field on cathode 240 MV and short filling time is under study.

Parameter	Value
f_π	5.712 GHz
Δf	≈ 100 MHz
Q_0	10450
β	2.93
τ_F	148 ns
E_{cath}	240 MV/m
S_{11} @res	-5.86 dB
$E_{surf}/E_{cathode}$	0.9
Max Sc on coupler surface	3 W/μm²
Field flatness	<1%
Hsurf on coupler	700 kA/m
T_{pulsed} @ 100 ns (square pulse) @ 200 ns (square pulse)	45°C 65°C

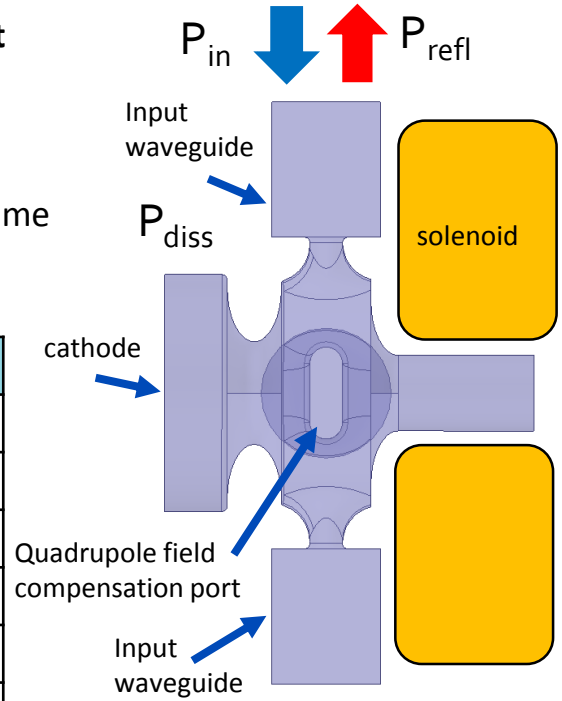

MC slot coupler

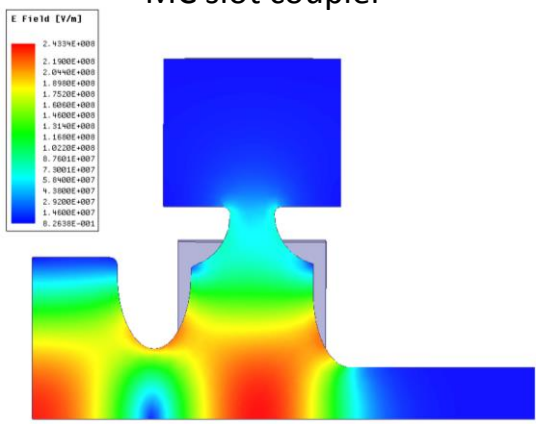

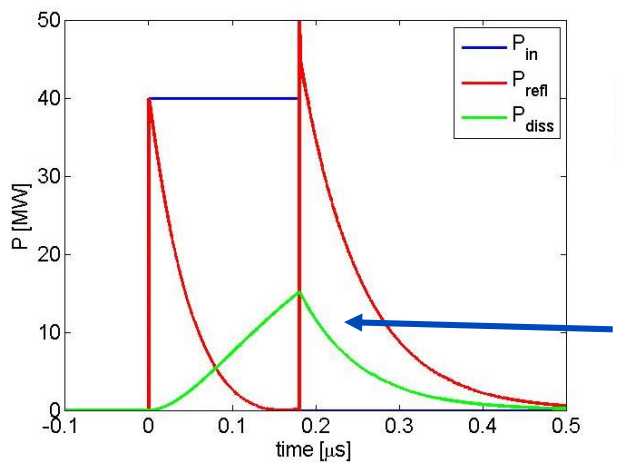

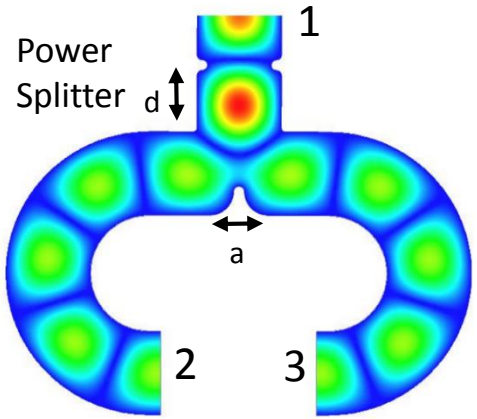

Ecath=240MV/m
Pr ~$15MW$

Low pulse heating coupler

We need to have a **compact gun** to have the possibility to place the solenoid immediately after the full cell (no mode launcher type) and low surface fields and pulsed heating.

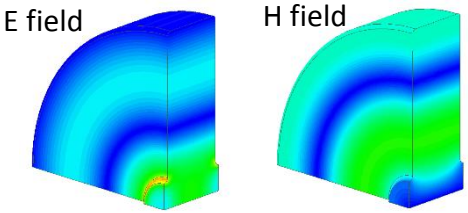

Proposed coupler: **Electric coupling (EC)** coupler based on **TM020** mode on the full cell. Different kind of geometries have been investigated:

Type A

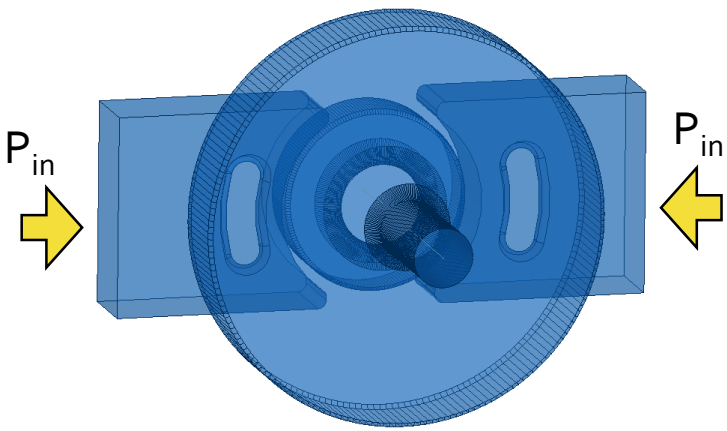

- Waveguide comes alligned with the half cell
- The short circuit plane and the slots are shaped to match the field at the coupling cell
- Needs a power splitter
- Waveguide short circuited at $\sim\lambda_g/4$

Type B

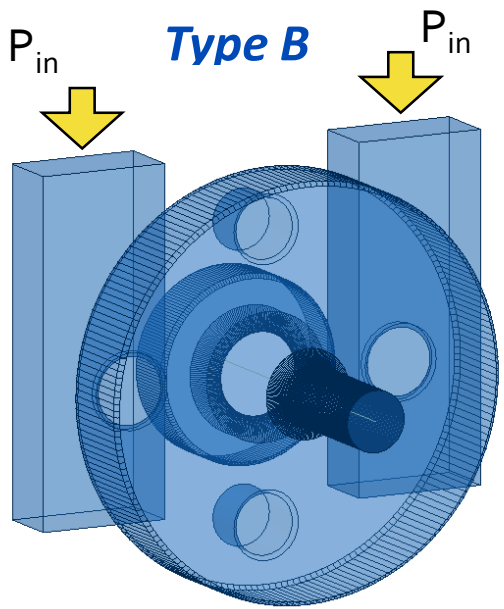

- Waveguides run sideways the half cell
- Coupled with rounded slots
- Needs a power splitter
- Waveguide short circuited at $\lambda_g/4$
- Circular slot
- Tapered waveguide
- symmetric ports for vacuum pumping and quadrupolar component compensation

Type C

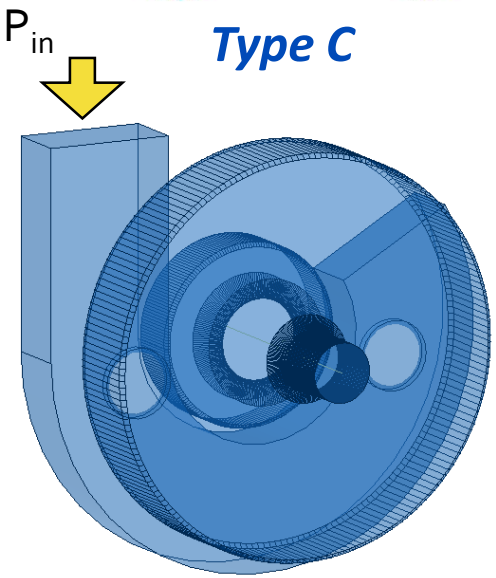

- Waveguide run around the half cell
- Coupled with rounded slots
- Doesn't need a power splitter
- Waveguide short circuited at $\lambda_g/4$
- Circular slot
- Tapered waveguide

Low pulse heating coupler results

Parameter	slot coup.	Type A	Type B	Type B comp.	Type C
f_{res}	5.712 GHz	5.7124 GHz	5.7144 GHz	5.7141 GHz	5.714 GHz
freq. separation $0/\pi$ mode	≈ 100 MHz	≈ 80 MHz	≈ 80 MHz	≈ 80 MHz	≈ 80 MHz
Q_0	10455	14421	14347	14368	14350
β	2.93	2.95	2.96	2.94	3.17
Q_L	2660	3646	3623	3649	3416
τ_F	148 ns	203 ns	201 ns	203 ns	191 ns
E_{cath} [MV/m]	240	240	240	240	240
Esurf/Ecath (on the coupler)	0.34	0.88	0.91	0.88	0.86
Hsurf [kA/m] (on the coupler)	700 kA/m	340 kA/m	357 KA/m	379 kA/m	324 KA/m
T_{pulsed} (square pulse) @ 100 ns @ 200 ns	46°C 65°C	11°C 15.6°C	12.2°C 17.3°C	13.8°C 19.5°C	10°C 14.2°C
Max Sc [W/μ^2] (on the coupler)	3	4.1	4	3.9	4
$\frac{E_{CAT}}{\sqrt{P_{diss}}} \left[{}^{MV}/_{m\sqrt{MW}} \right]$	61.5	56	56.4	55.64	55.92

Results obtained with Ansys Electronic Desktop simulations.

Low pulse heating coupler multipolar components

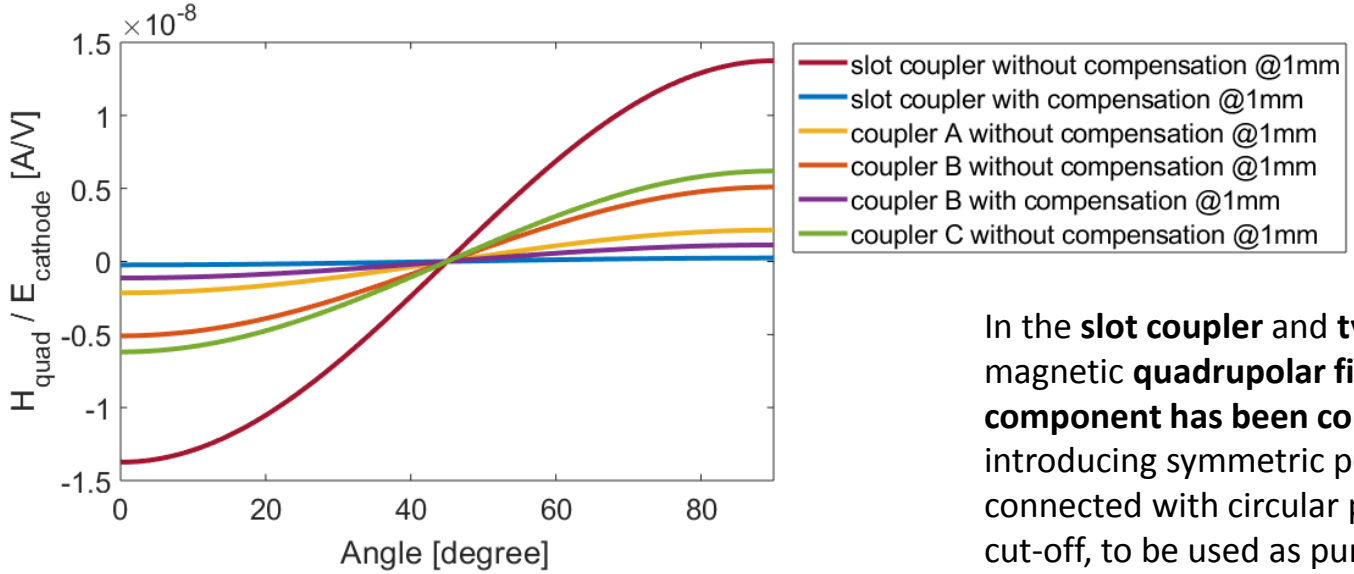

In the **slot coupler** and **type B** gun the magnetic **quadrupolar field component has been compensated** introducing symmetric port holes connected with circular pipes below cut-off, to be used as pumping ports.

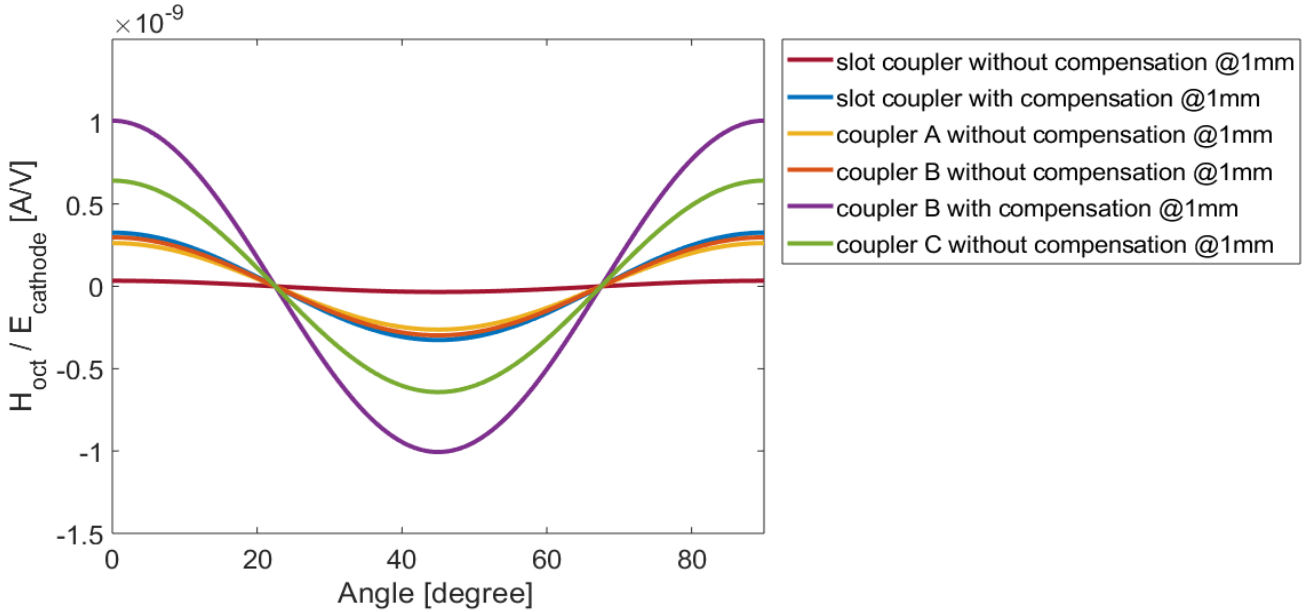

C-band TW structure: coupler type B

- Racetrack coupling slot
- Waveguides run sideways the accelerating cells
- 5 cells + 2 coupling TM020 cells

Preliminary results:

- f_{res} = 5.712 GHz
- S11 = -35 dB
- Hsurf = 118 kA/m
- Pulsed heating @Pin=40MW
  T<5°C with 1us pulse length

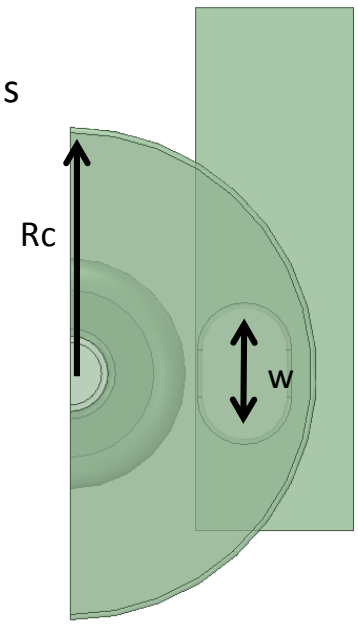

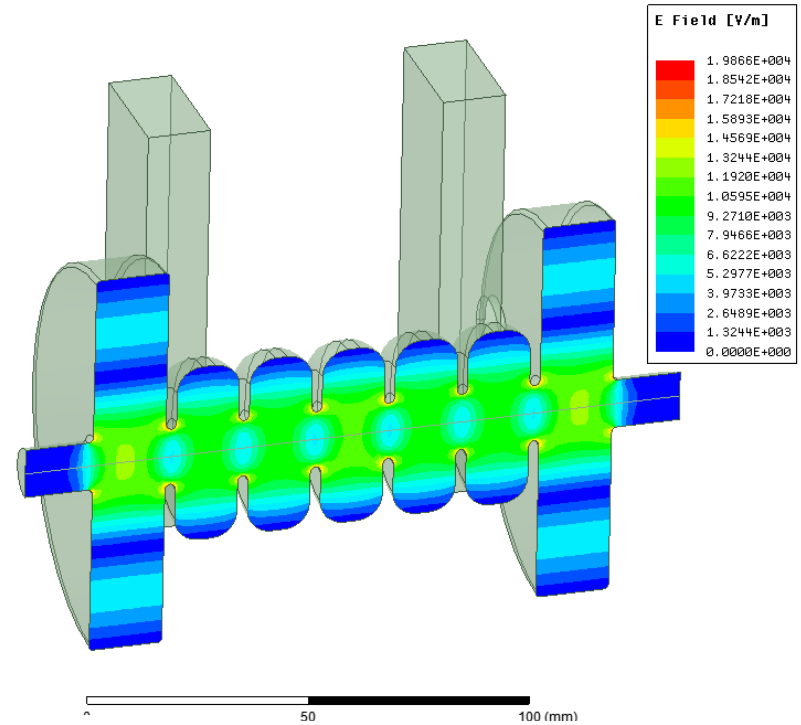

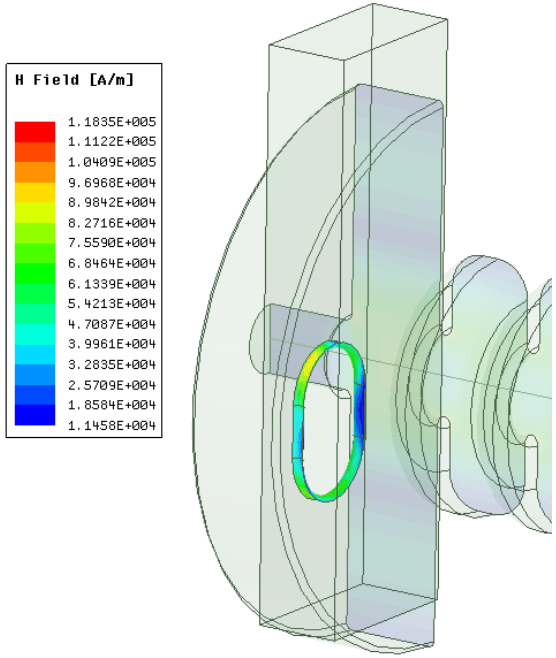

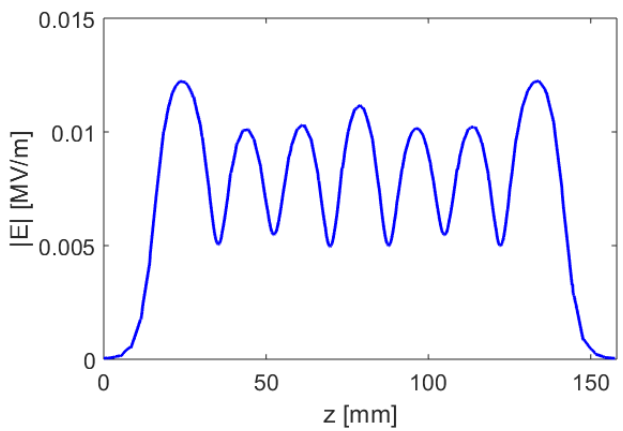

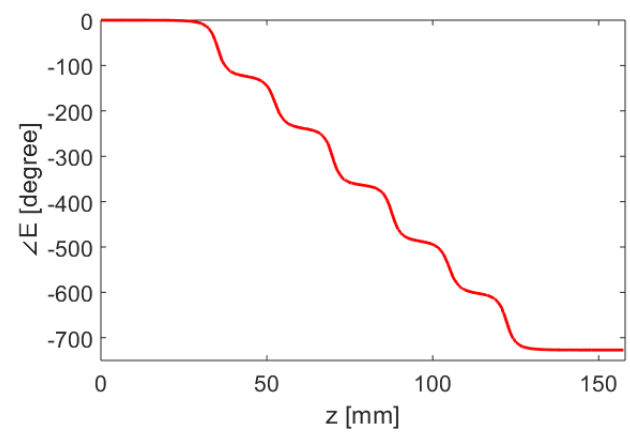

Summary and future work

The **«gasket-clamping»** is a new technique for the realization of RF structures that avoids copper brazing (and the associated drawbacks). This technique has been succesfully used for the realization of two S-band RF guns.

- The possibility to **extend the use of this technique to the realization of a Linac (S/C/X band)** has been investigated through the design of a prototype in the **project BOLT (funded by INFN CNTT**).
- The **electromagnetic** and **mechanical design** of a **7 cell TW S-band prototype** have been presented together with the assembly procedure.
- **Vacuum test on single cell joint** has been succesfull. A vacuum test on the Coupler cell joint is foreseen.
- **The mechanical design with all the tolerances has been completed** and the realization of the different parts has been assigned to an italian company. The components will be ready in September and we will start the assembling procedure.
- After the realization and assembly of the prototype, **vacuum and low power RF test** will be performed at INFN-LNF laboratories. The **high power test** will be carried out probably in January at ELETTRA-Sincrotrone Trieste laboratory.

In the framework of XLS Compact Light an **high gradient ultra fast C-band gun** is under study at INFN-LNF.

- In order to have a compact RF gun, a design based on the magnetic coupling slot type coupler has been investigated. The main limitation for this type of coupler remains the **high surface magnetic field** and **pulsed heating** on the coupling slot.
- Thus, **different couplers geometries** have been studied based on a **TM020 mode full cell** electrically coupled with the waveguide.
- The feasibility of such couplers has to be further investigated and electromagnetic design has still to be optimized. Preliminary simulations give **promising results as far as the pulsed heating is concerned**.
- Simulations also open the possibility of using this type of coupler **to feed a TW accelerating structure**.

Thank you for the attention

Aknowledgement:
C. Serpico, ELETTRA - Sincrotrone Trieste, Trieste, Italy