STRUCTURAL FEA OF QUAI HEB400 SUPPORT BEAMS

Miguel Lino Diogo dos Santos
EN-EA-EC

EDMS1729183

CERN | EN ENGINEERING DEPARTMENT

Structure overview

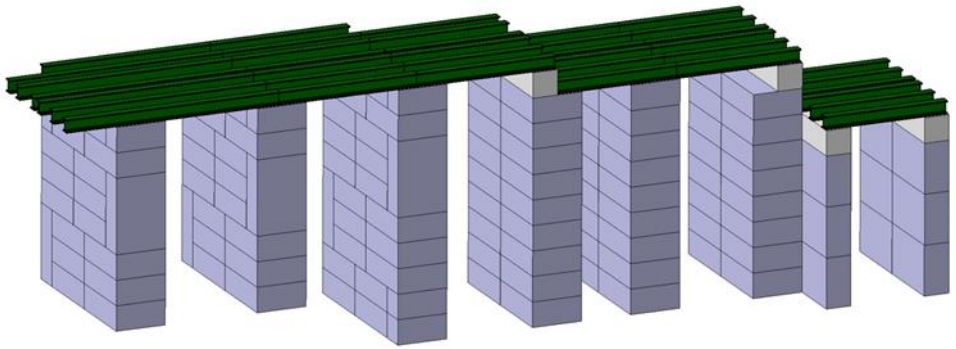

Previous iteration:

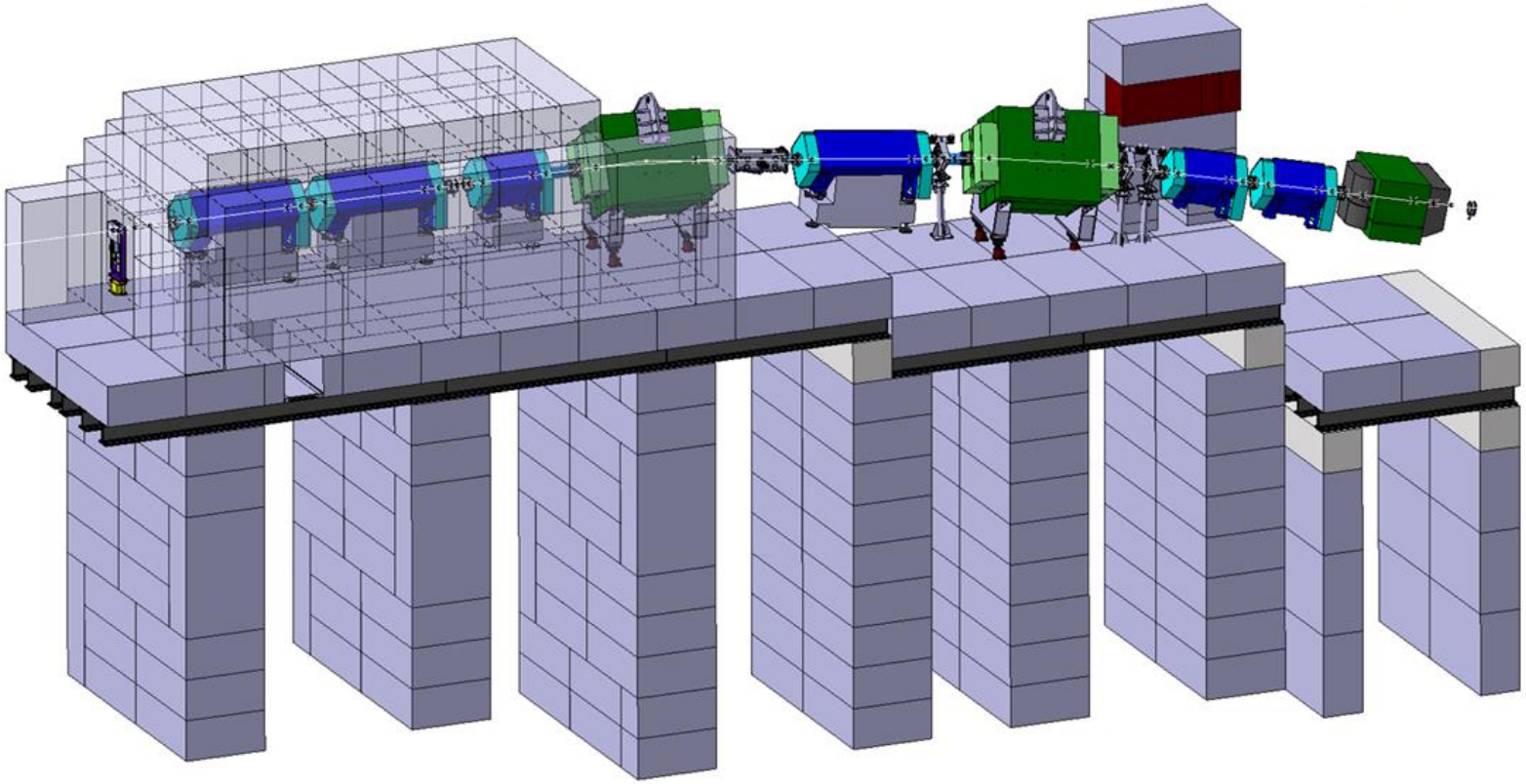

- Weight of the Tapis + shielding + H4 Beamline: 728t
- Weight supported by HEB400 beams.

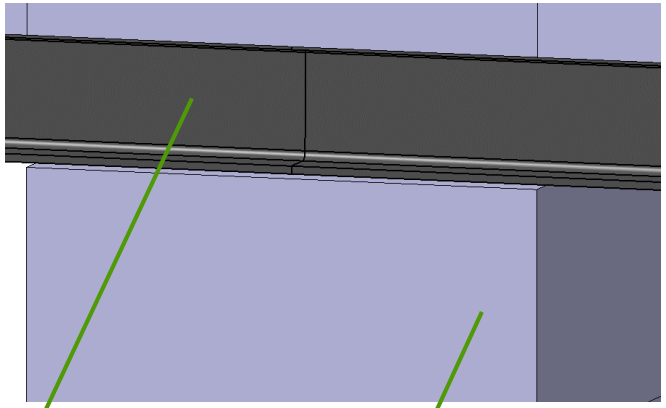

HEB400 beam

Concrete column

- Overall weight: 1667t

Structure overview

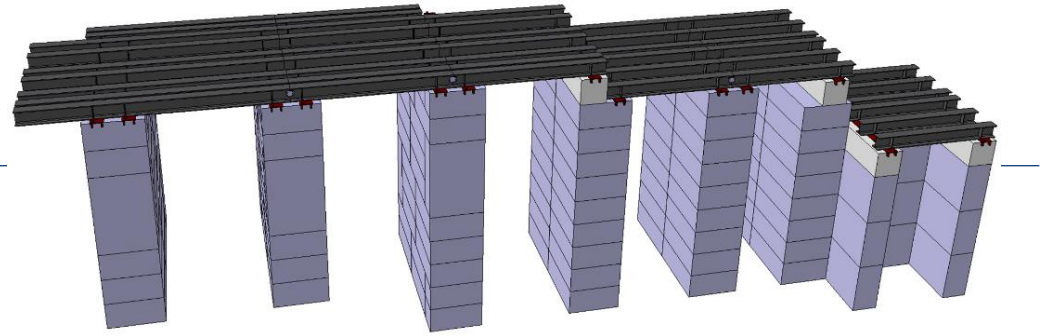

H4 Beamline Quai:

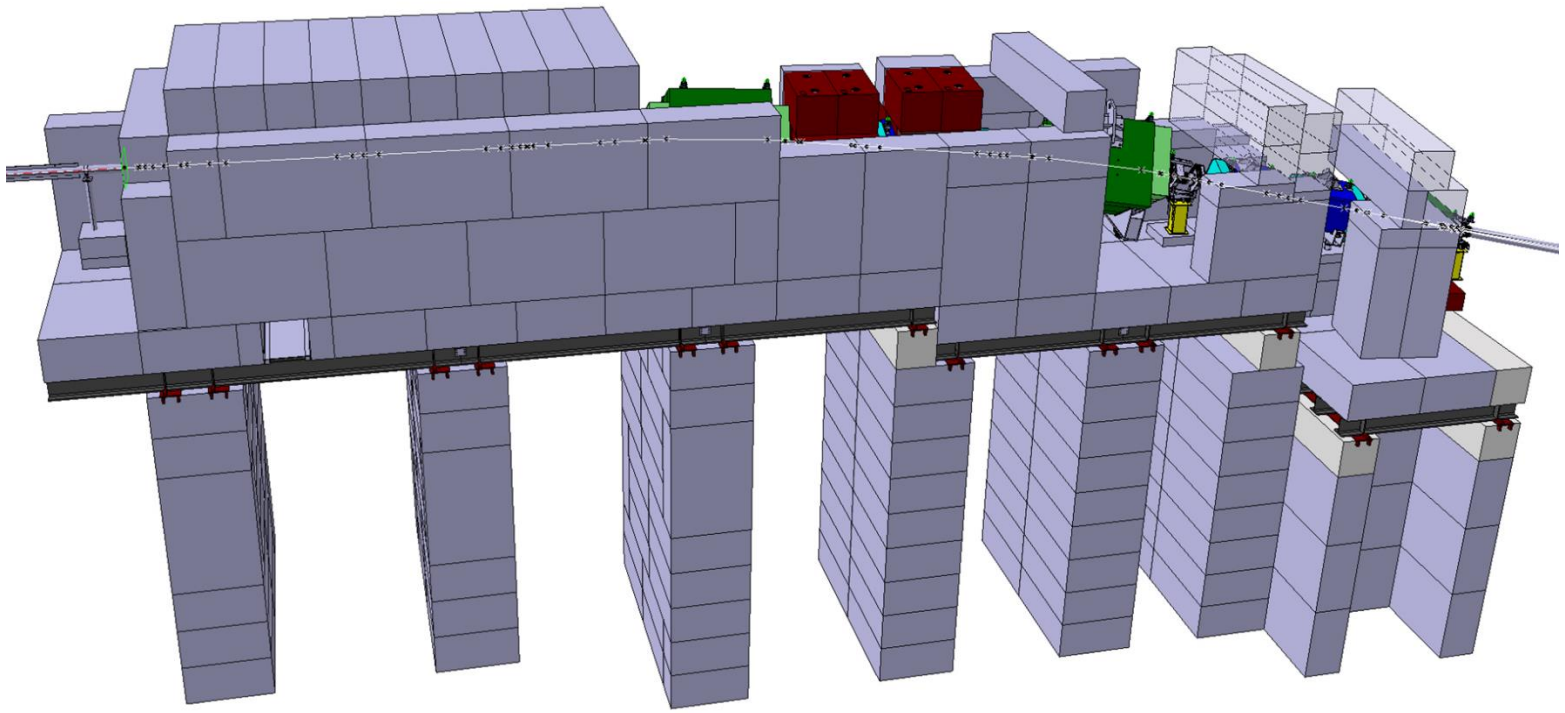

- Weight of the Tapis + shielding + H4 Beamline: 954t
- Weight supported by reinforced HEB400 beams (added beams) and a steel basement.

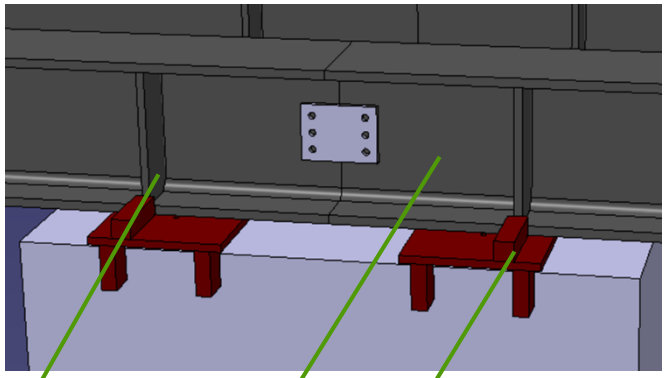

Stiffeners

HEB400 beam

Steel Basement

- Overall weight: 1927t → Load increase of 13%

Methodology

A static structural simulation was performed on a simplified model of the Quai with the following assumptions:

- The support columns were not included in the model.
- The shielding structure was simplified as well as the H4 beamline with the objective of reducing computing resources. Each component was modeled to be true to it's weight and placement in the Quai platform → This grants that both weight an center of gravity of the structure are respected.
- The steel basement for the HEB400 profiles was no included in the model and was replaced by supporting surfaces. The latter extracted reaction values from the simulation were used for validation of the steel basement.
- All the contacts between the Quai different elements are considered as bounded.

Methodology

Load and structure simplification

- The structure was divided 5 main load levels: 1 Tapis

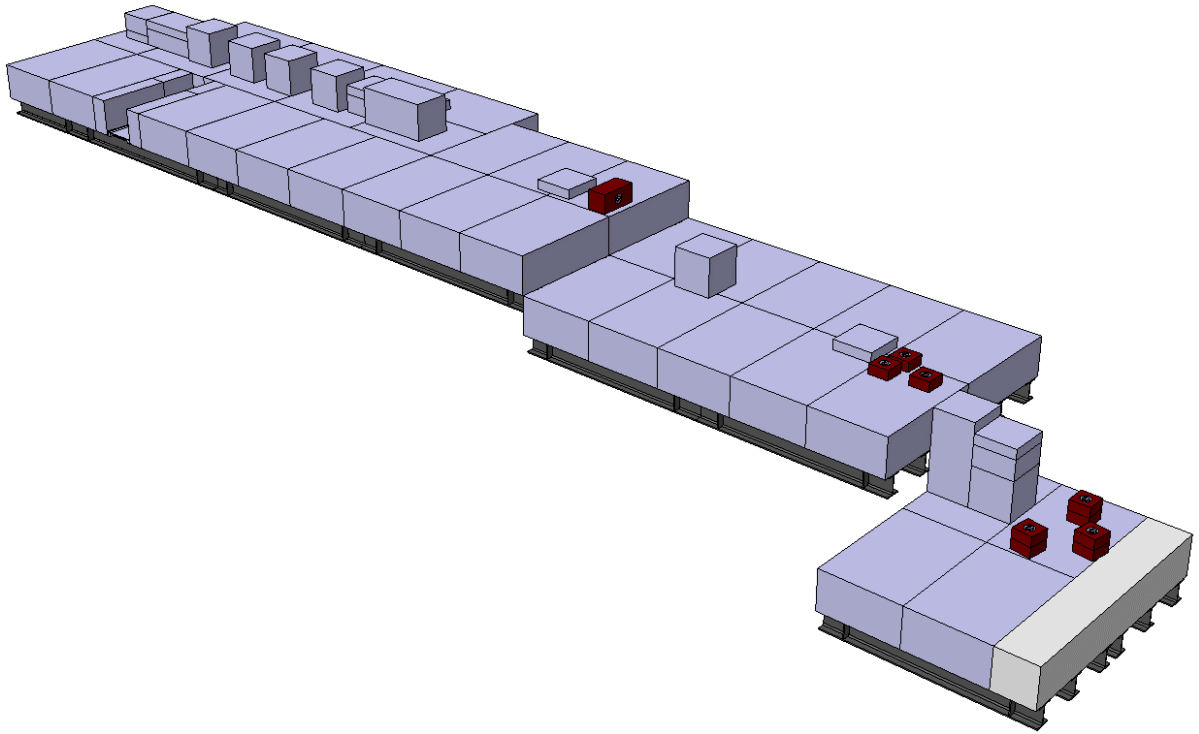

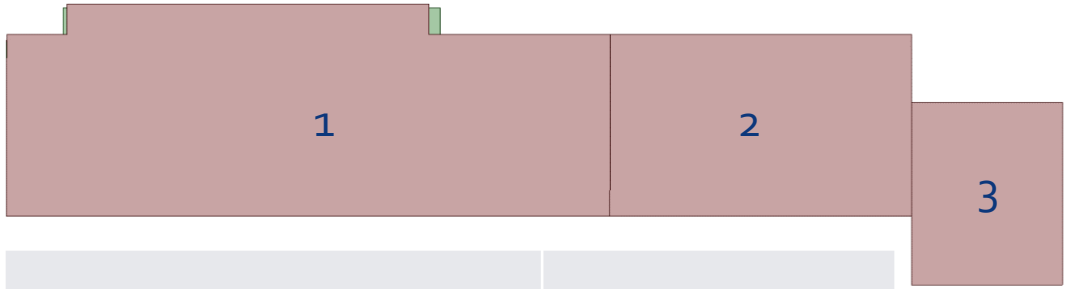

Component		Weight [t]
Tapis	1	160.32
	2	75.00
	3	37.68
Total [t]		273.00

Methodology

Applied load and structure simplification

- The structure was divided 5 main load levels: 2 H4 beamline

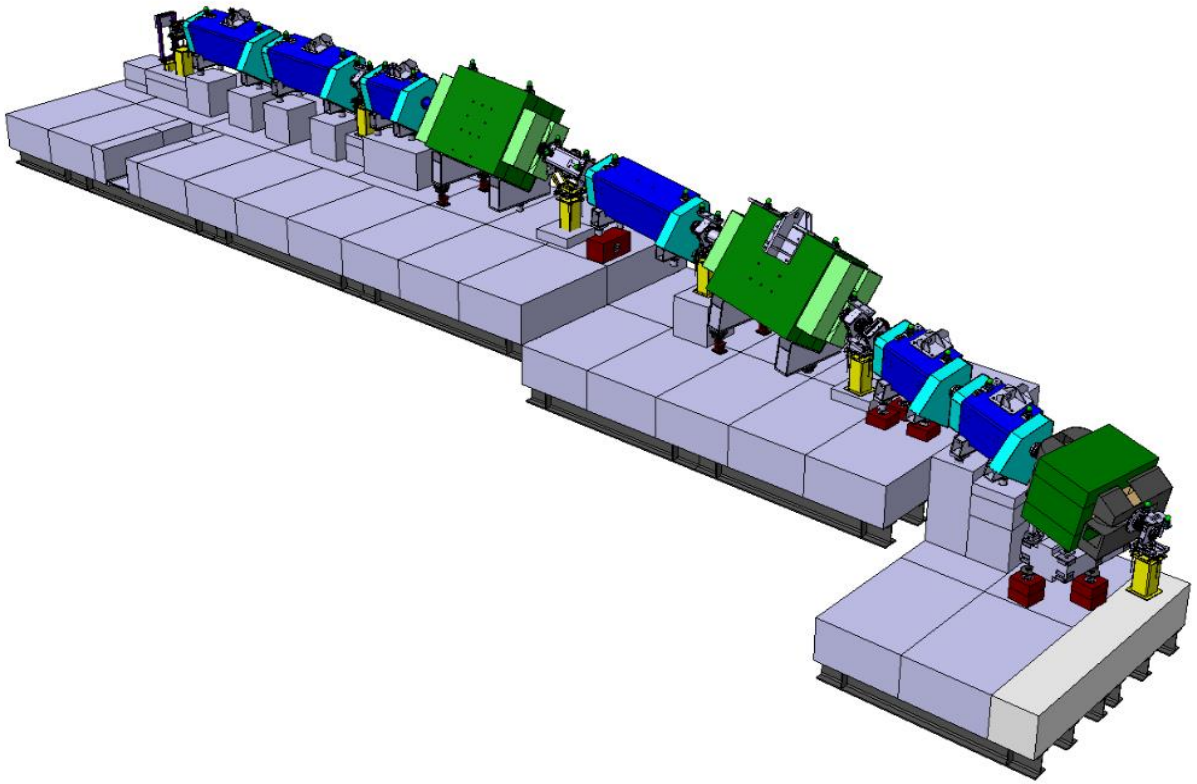

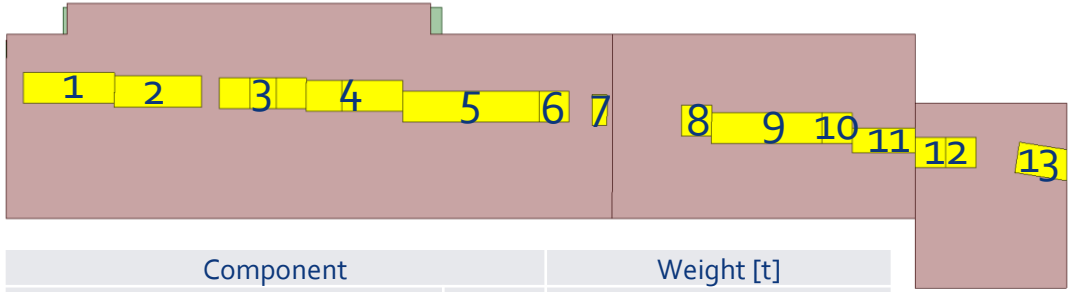

Component		Weight [t]
H4 Beam Line	1	0.06
	2	11.00
	3	11.00
	4	5.00
	5	29.00
	6	0.40
	7	5.50
	8	5.56
	9	29.00
	10	0.06
	11	5.00
	12	5.00
	13	15.06
Total [t]		121.64

Methodology

Applied load and structure simplification

- The structure was divided 5 main load levels: 3 Dump + shielding

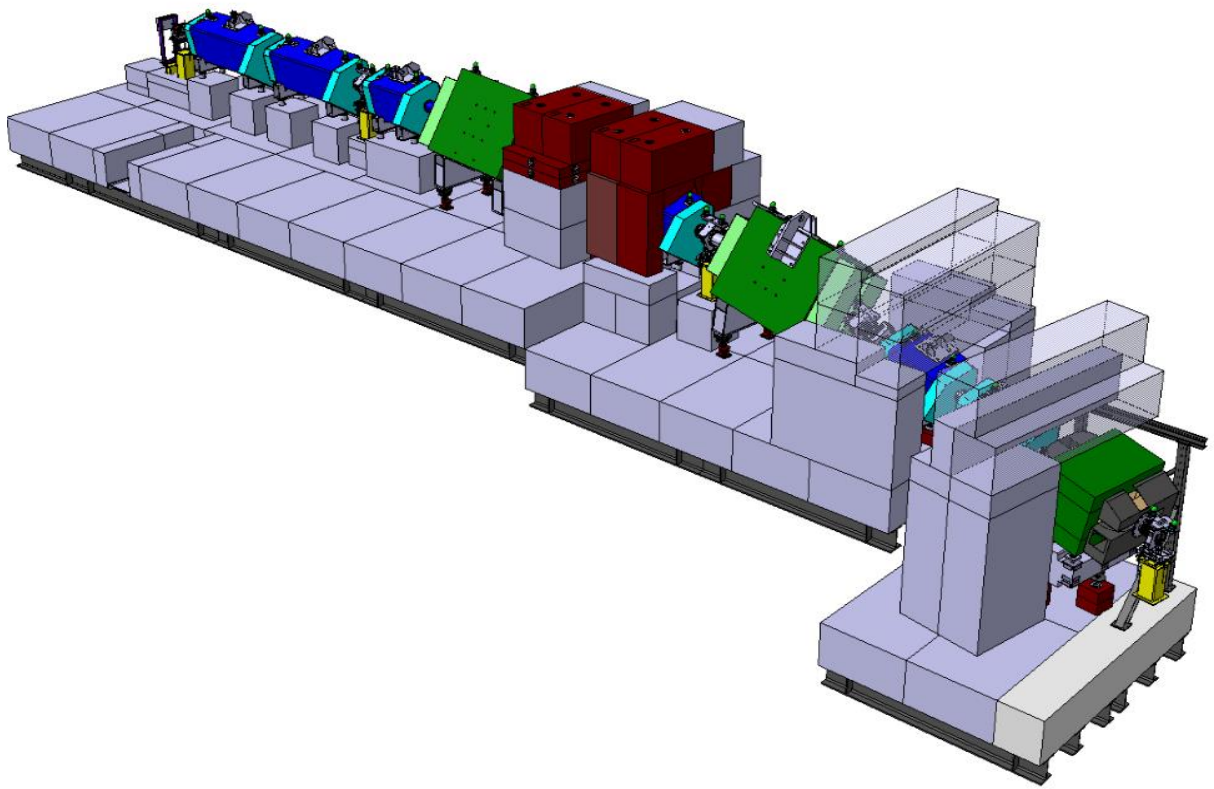

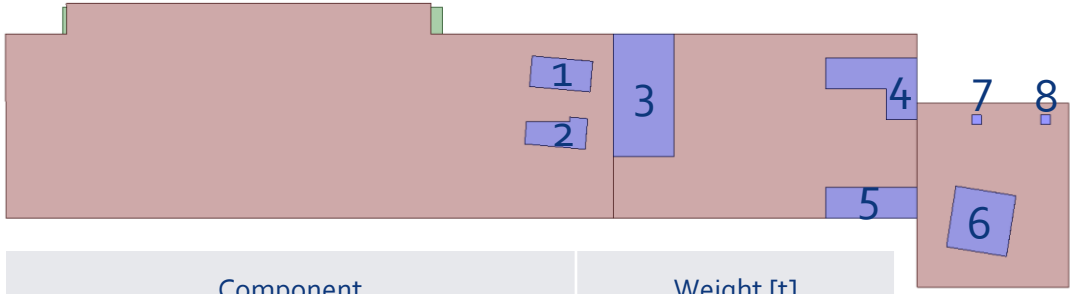

Component		Weight [t]
Dump+ Shielding	1	25.00
	2	25.00
	3	50.00
	4	19.25
	5	19.25
	6	19.25
	7	9.63
	8	9.63
Total [t]		177.00

Methodology

Applied load and structure simplification

- The structure was divided 5 main load levels: 4 Lateral shielding

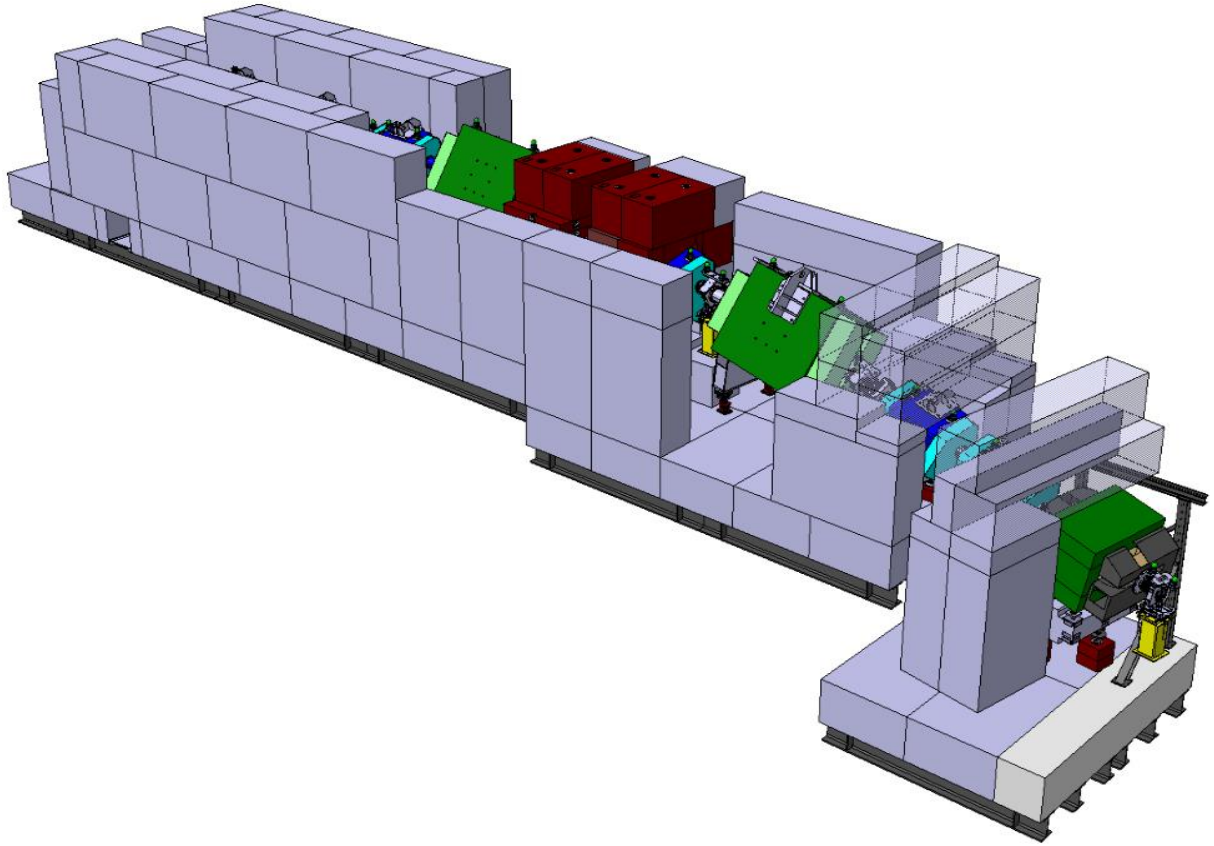

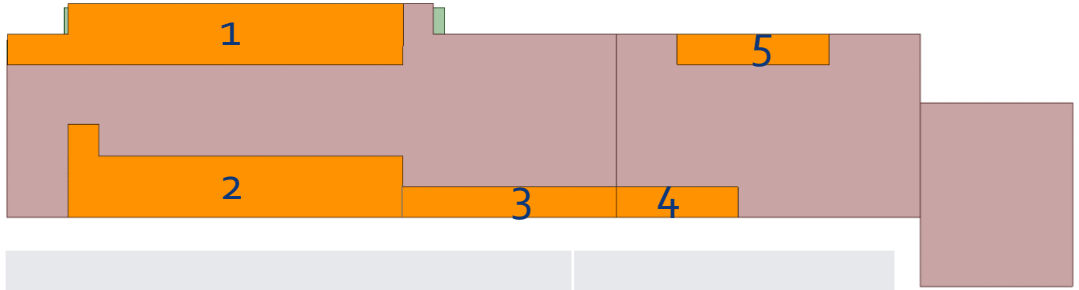

Component		Weight [t]
Lateral Shielding	1	113.68
	2	113.68
	3	32.50
	4	20.00
	5	25.15
Total [t]		305.00

Methodology

Applied load and structure simplification

- The structure was divided 5 main load levels: 5 Top shielding

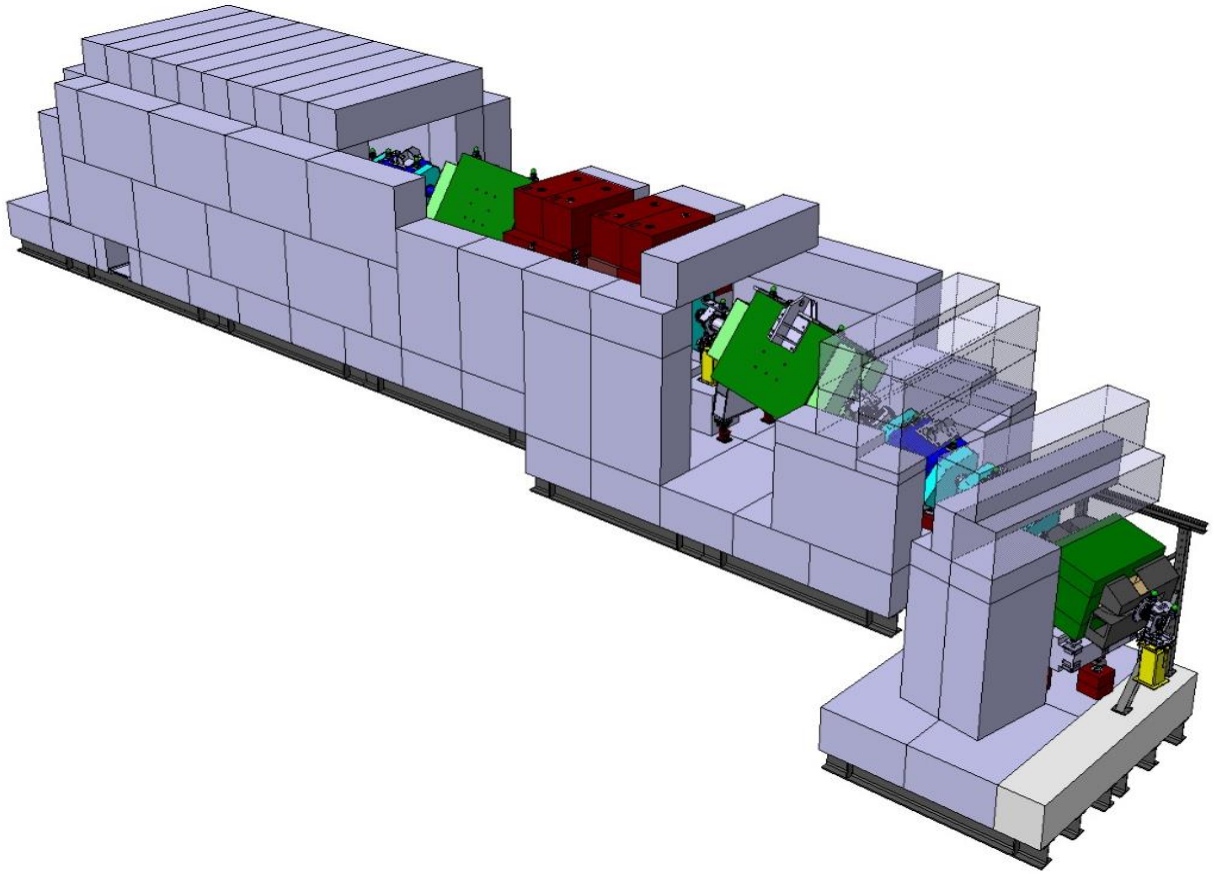

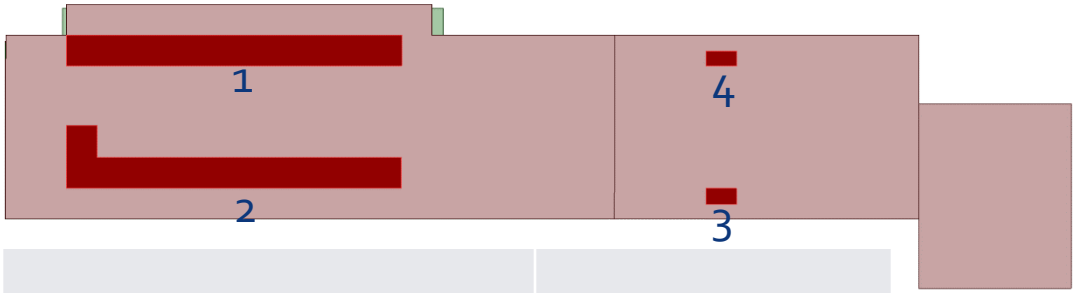

Component		Weight [t]
Top Shielding	1	35.20
	2	35.20
	3	3.20
	4	3.20
Total [t]		76.80

QUAI LOAD MAP

Component		Material	Density[kg/m³]	Area [m²]	Thickness [m]	Volume [m³]	Weight [kg]	Calculated Weight [kg]
Tapis	1	Concrete 2	5000	84.480	0.38	32.102	160512	160320
	2	Concrete 2	5000	38.400	0.395	15.168	75840	75000
	3	Concrete 2	5000	19.200	0.395	7.584	37920	37680
H4 Beam Line	1	Structural Steel	7850	1.920	0.004	0.008	60	60
	2	Structural Steel	7850	1.905	0.74	1.410	11068	11000
	3	Structural Steel	7850	1.840	0.768	1.413	11093	11000
	4	Structural Steel	7850	2.033	0.315	0.641	5028	5000
	5	Structural Steel 2	20000	2.878	0.505	1.454	29071	29000
	6	Structural Steel	7850	0.640	0.08	0.051	402	400
	7	Structural Steel 3	30000	0.318	0.578	0.184	5505	5500
	8	Structural Steel 2	20000	0.640	0.435	0.278	5568	5560
	9	Structural Steel 2	20000	2.326	0.625	1.454	29075	29000
	10	Structural Steel	7850	0.640	0.012	0.008	60	60
	11	Structural Steel	7850	1.053	0.61	0.642	5043	5000
	12	Structural Steel	7850	1.280	0.5	0.640	5024	5000
	13	Structural Steel 2	20000	1.062	0.71	0.754	15083	15060
Dump+ Shielding	1	Concrete 3	30000	1.280	0.652	0.835	25037	25000
	2	Concrete 3	30000	1.094	0.762	0.834	25009	25000
	3	Concrete 3	30000	5.133	0.325	1.668	50051	50000
	4	Concrete 3	30000	2.560	0.251	0.643	19277	19250
	5	Concrete 3	30000	1.920	0.335	0.643	19296	19250
	6	Concrete 3	30000	2.560	0.251	0.643	19277	19250
	7	Concrete 4	300000	0.063	0.515	0.032	9656	9625
	8	Concrete 4	300000	0.063	0.515	0.032	9656	9625
Lateral Shielding	1	Concrete 3	30000	15.360	0.247	3.794	113818	113675
	2	Concrete 3	30000	14.760	0.257	3.793	113800	113675
	3	Concrete 3	30000	4.480	0.242	1.084	32525	32500
	4	Concrete 3	30000	2.560	0.261	0.668	20045	20000
	5	Concrete 3	30000	3.200	0.262	0.838	25152	25150
Top Shielding	1	Concrete 3	30000	7.040	0.167	1.176	35270	35200
	2	Concrete 3	30000	7.720	0.152	1.173	35203	35200
	3	Concrete 3	30000	0.334	0.32	0.107	3209	3200
	4	Concrete 3	30000	0.306	0.35	0.107	3210	3200

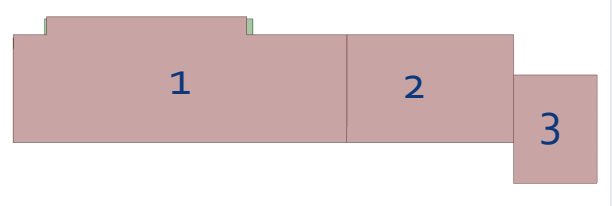

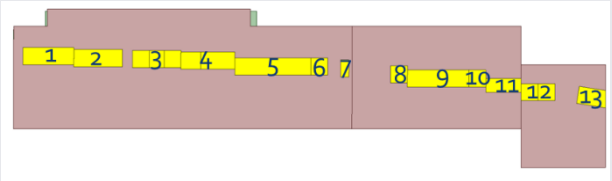

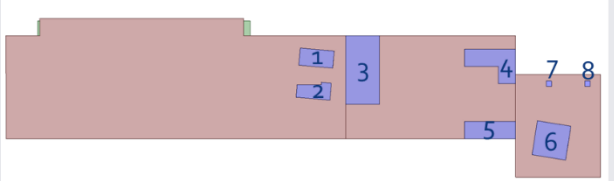

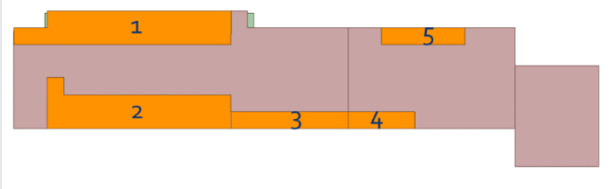

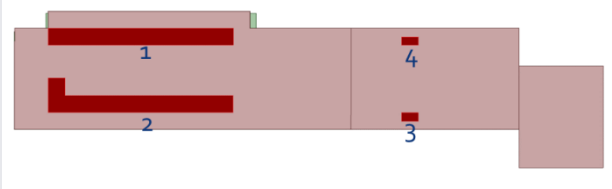

Methodology

Applied load and structure simplification

- Total weight of the structure above the HEB400 profiles and above the basement supporting structure:

		Weight [kg]	Calculated Weight [kg]		
Total [kg]		955844	953440	Dif. [kg]	2404
Total + HEB 4400 Profiles [kg]		988950	980440	Dif. [kg]	8510

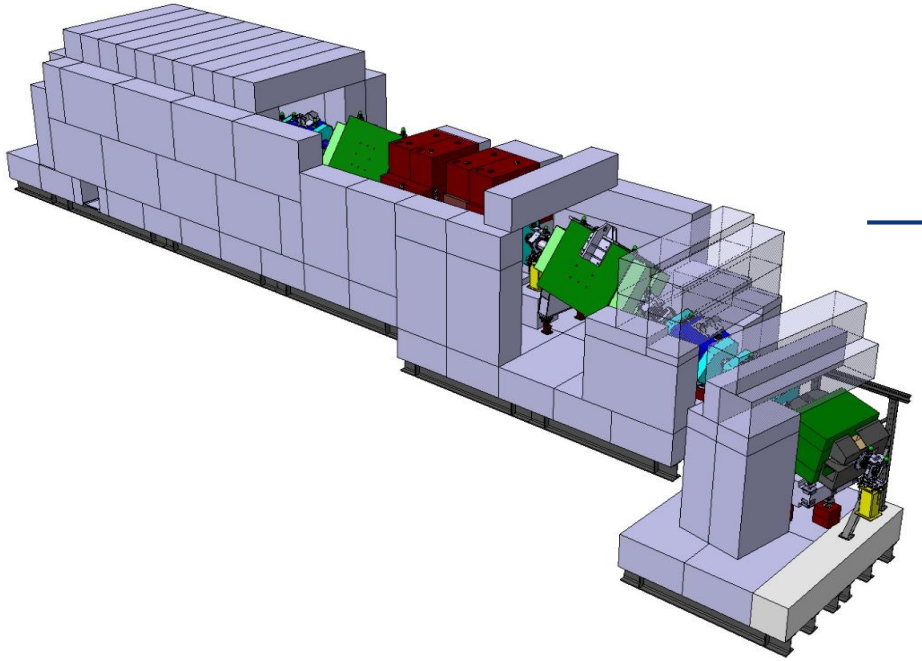

Simplification

- Same weight (load)
- Same center of gravity
- Less components
- Thinner components

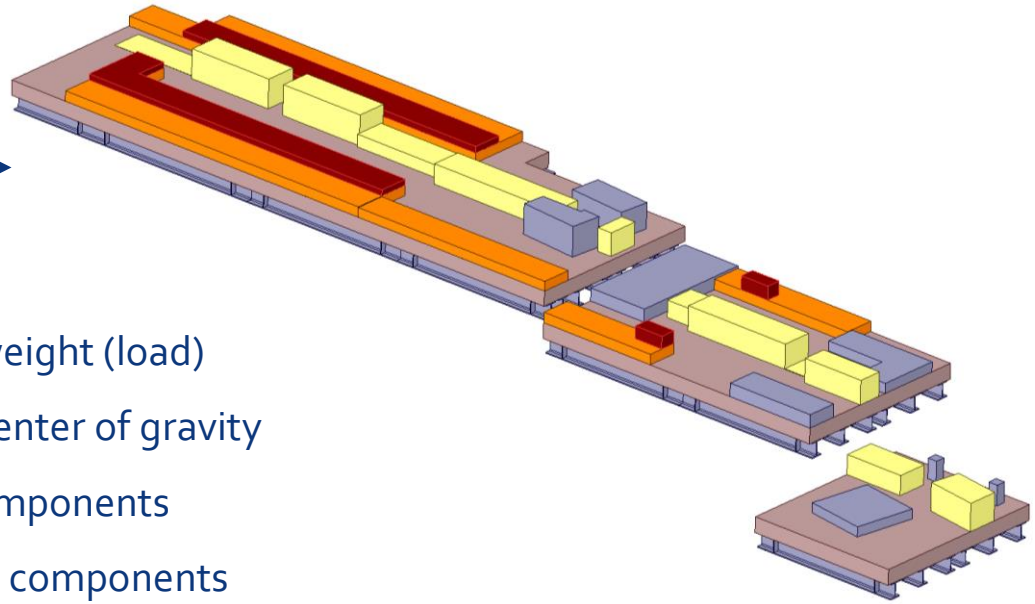

Methodology

Supports

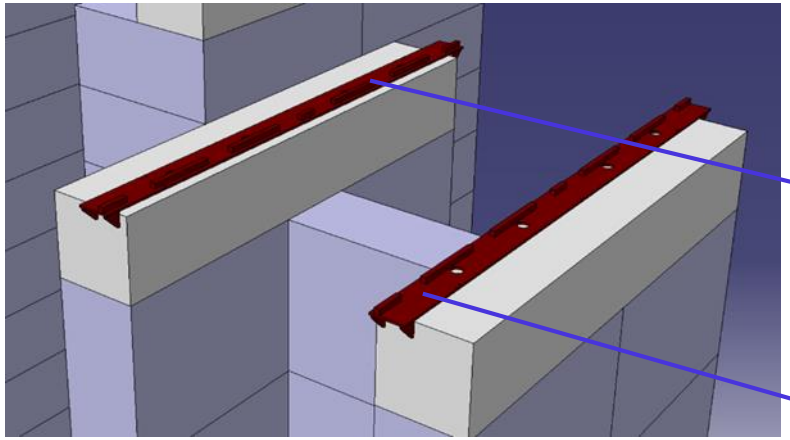

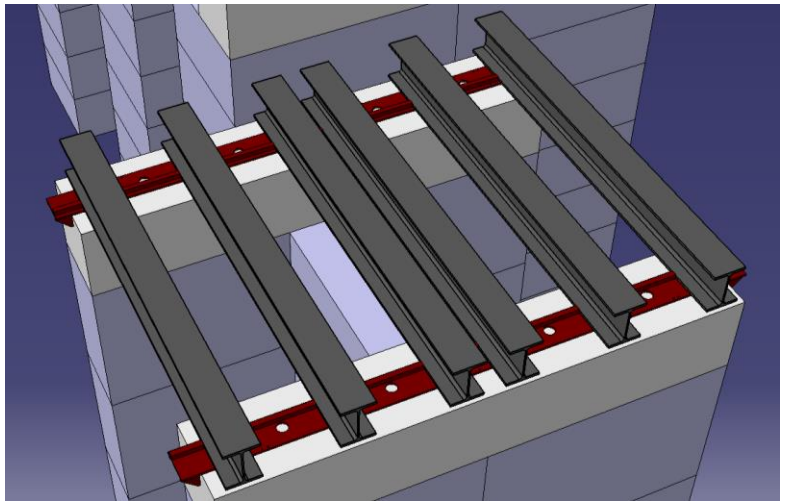

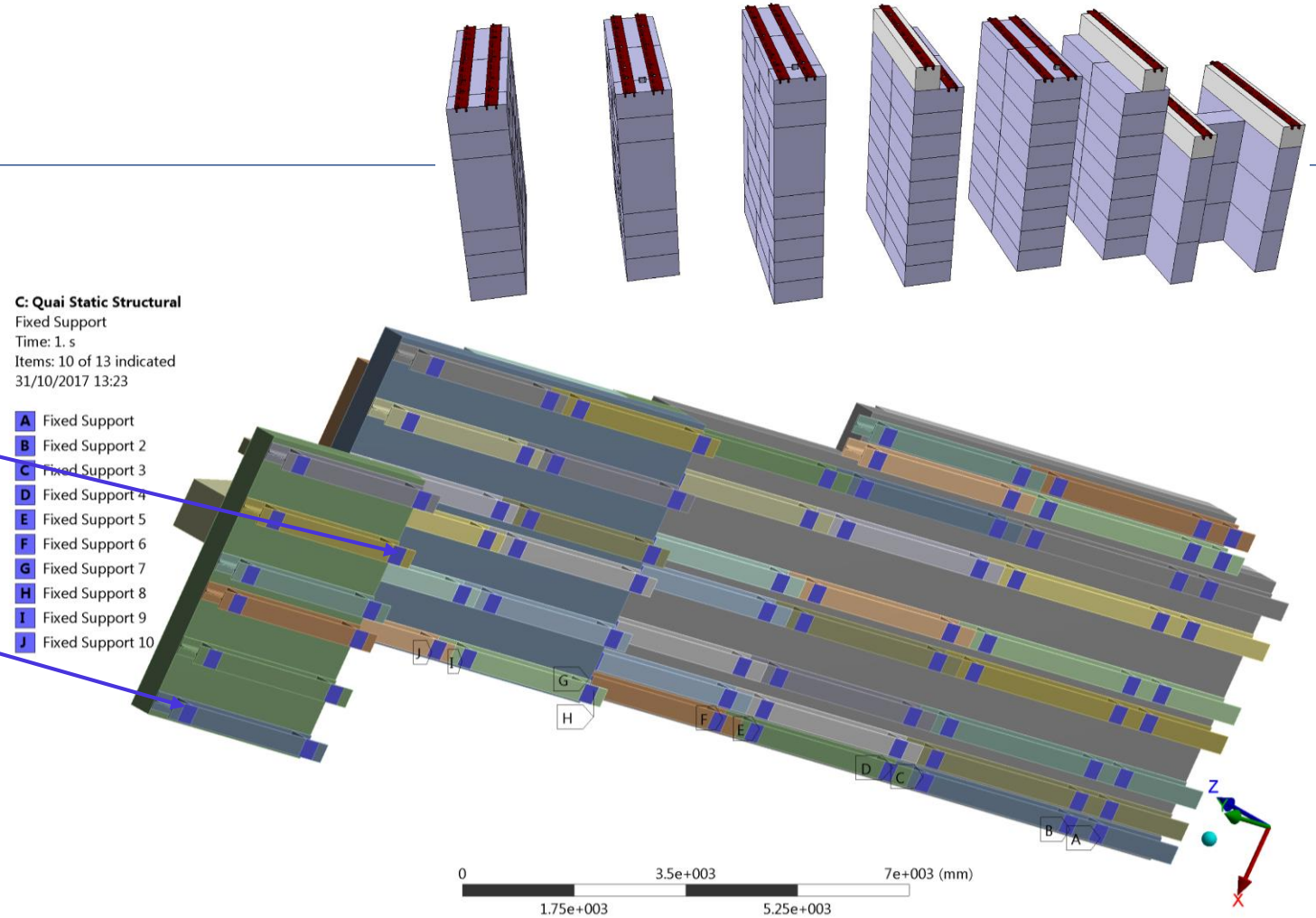

- Steel basement supports replaced by their surface imprint in the HEB400 profiles and applied fixed supports (6DOF restriction) → similar support behavior less computation time.

Results

Total displacement

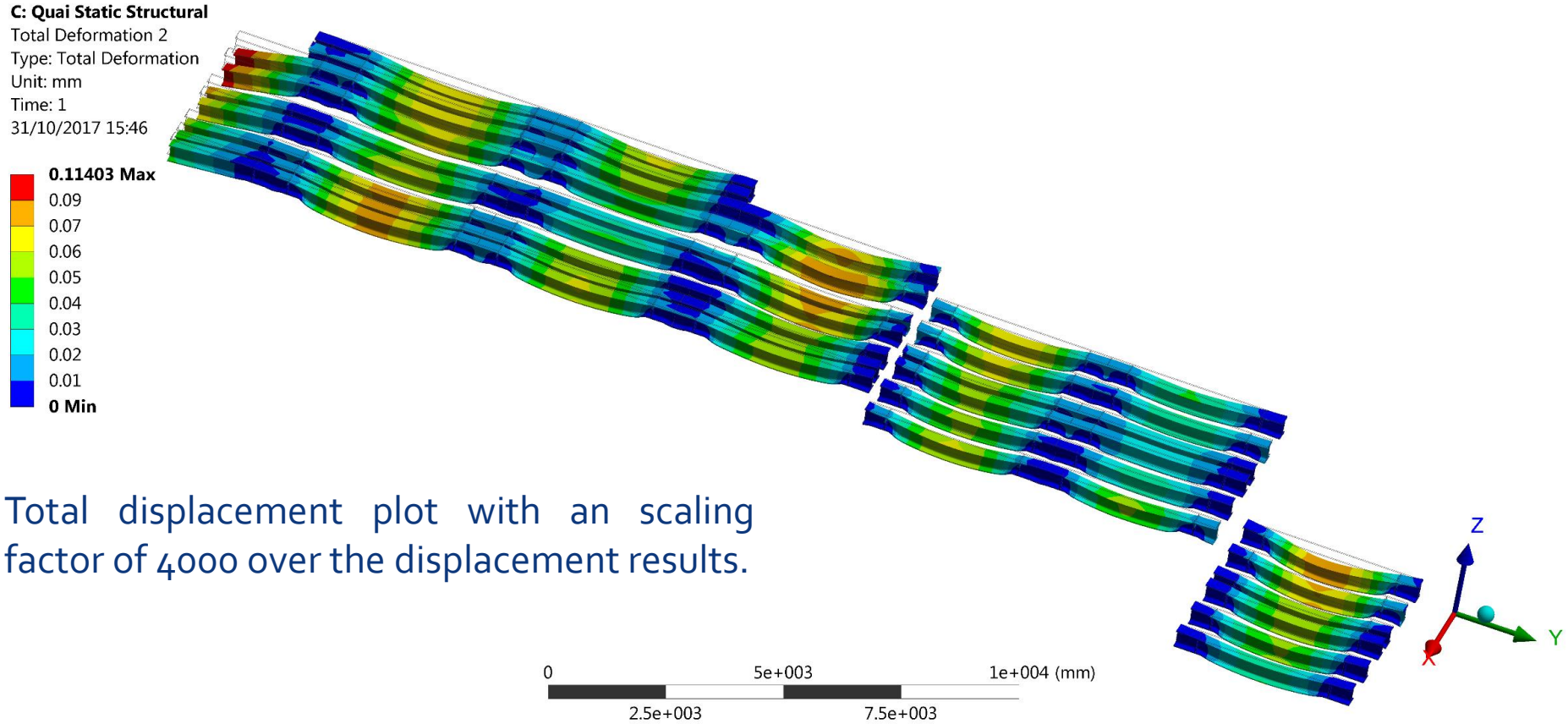

Total displacement plot with an scaling factor of 4000 over the displacement results.

- **Maximum displacement of 0.1mm in the larger section of the Quai.**

Results

von-Mises stress

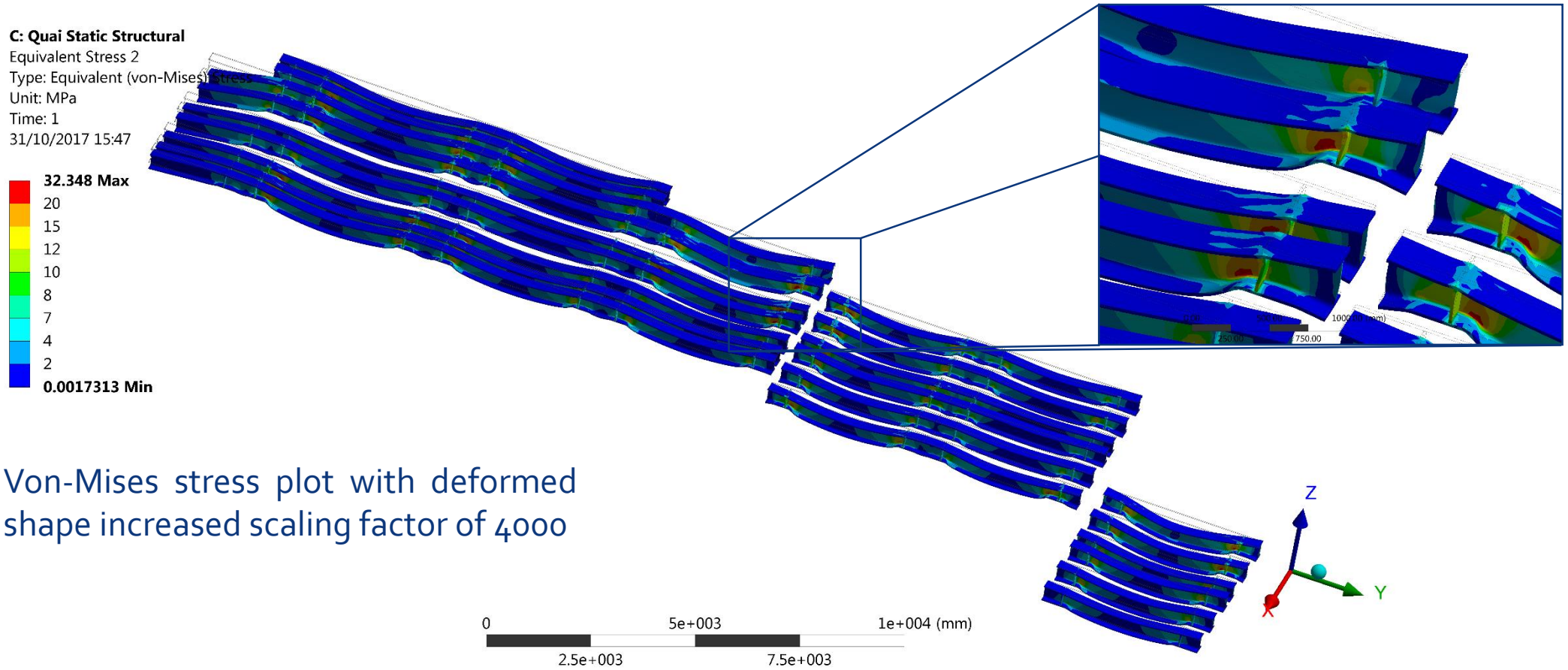

Von-Mises stress plot with deformed shape increased scaling factor of 4000

- **Maximum eq. stress of 32MPa in the larger section of the Quai.**

Results

Comparison with the previous results: Total displacement

Previous result

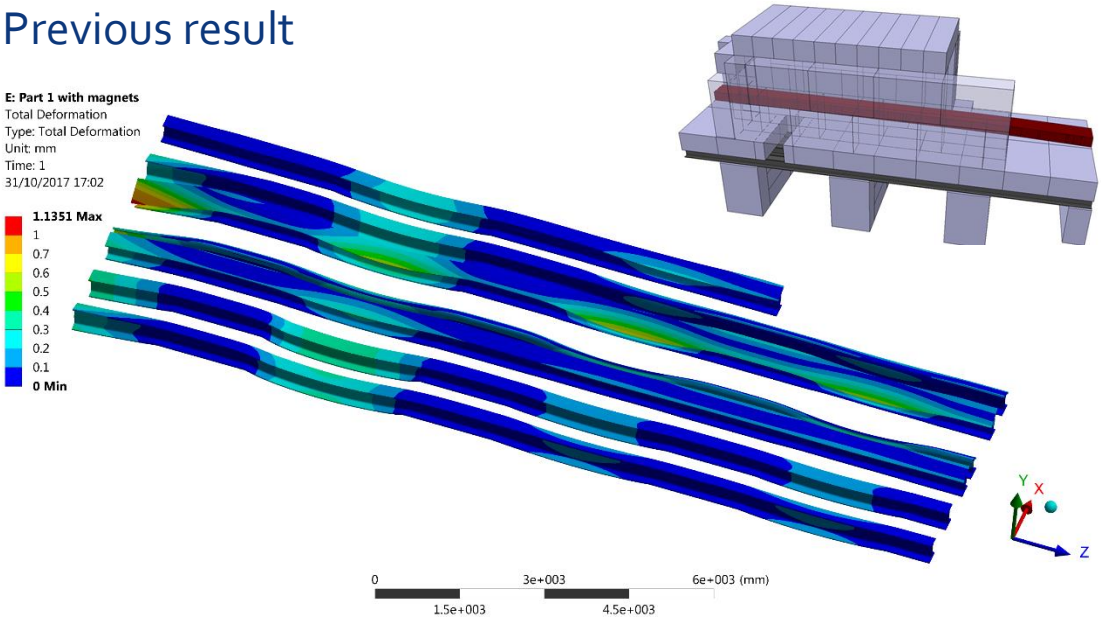

- Maximum displacement 1.1mm
- Total load: 536t

Updated analysis

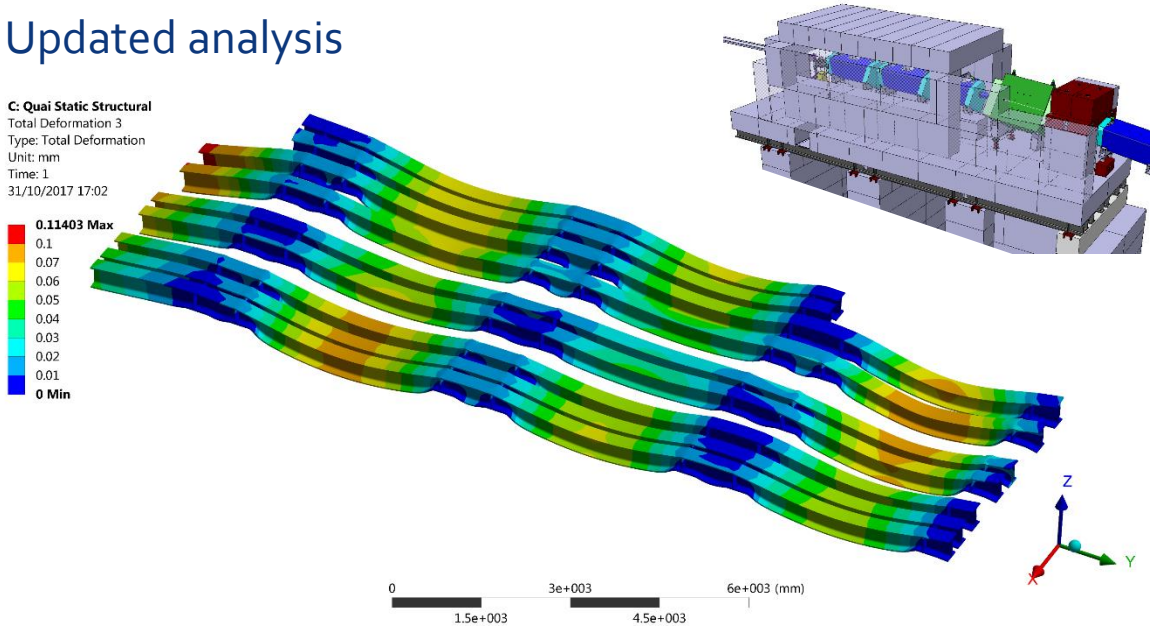

- Maximum displacement 0.1mm
- Total load 603t

Load applied increase 11% from the previous simulation to the updated version.

A factor 10 (approx.) between each simulation is verified for the displacement values → Similar load different supporting scheme (HEB profiles).

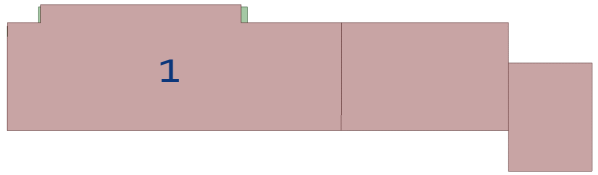

Results

Comparison with the previous results: Total displacement

Previous result

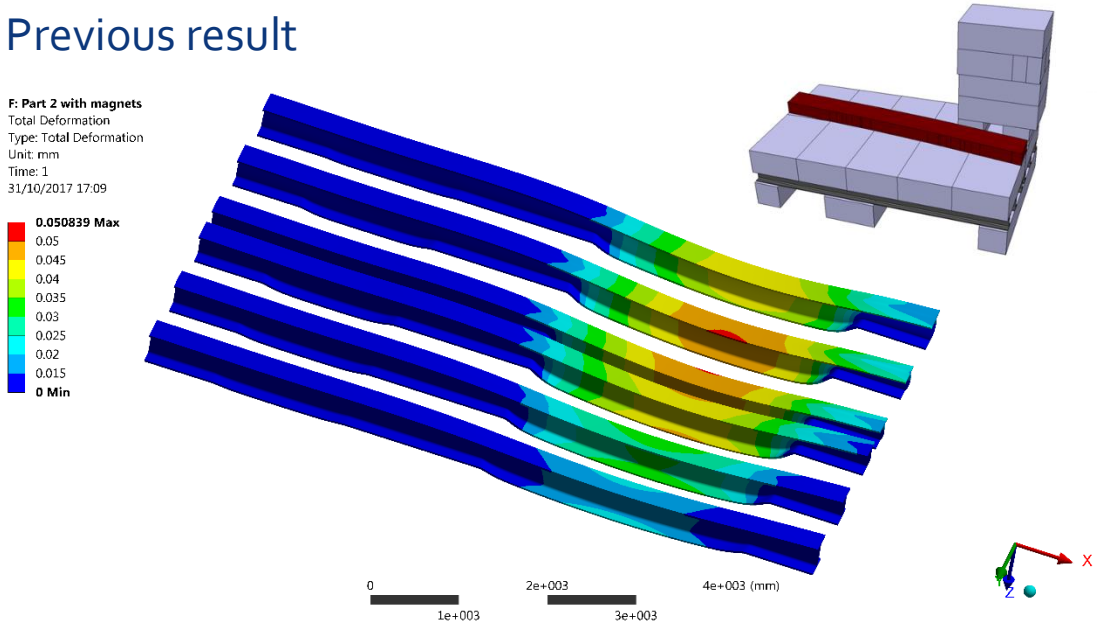

- Maximum displacement 0.05mm
- Load 158t

Updated analysis

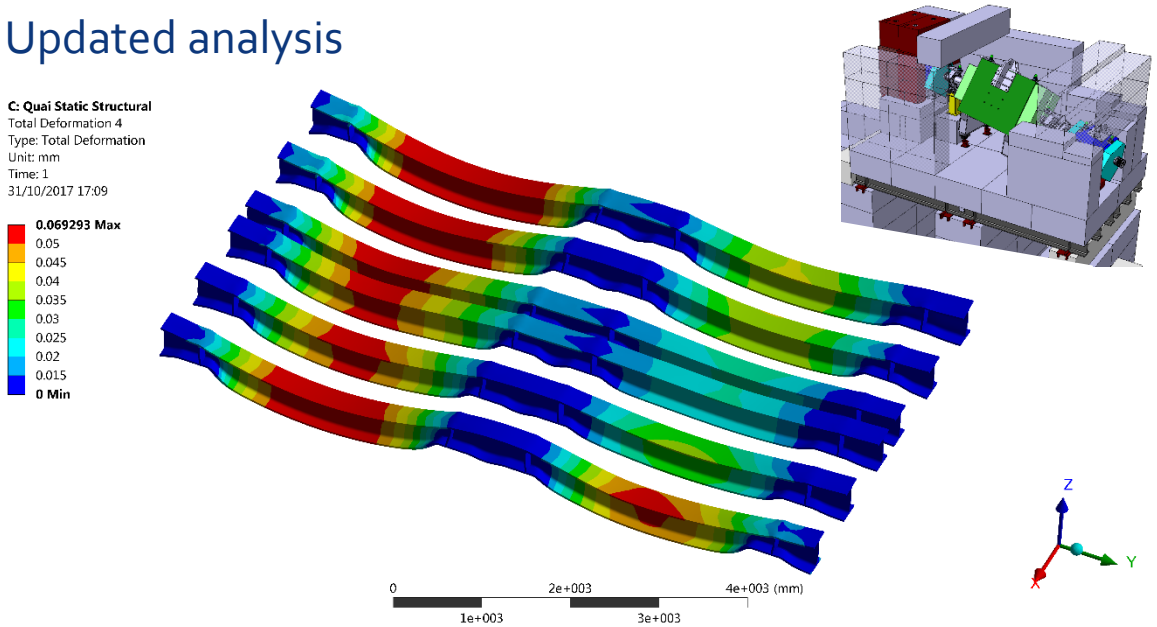

- Maximum displacement 0.06mm
- Load 256t

Load applied increase 38 % from the previous simulation to the updated version.

Similar displacement in both simulations <1mm, but different distribution.

Reinforcements are according to the load increase.

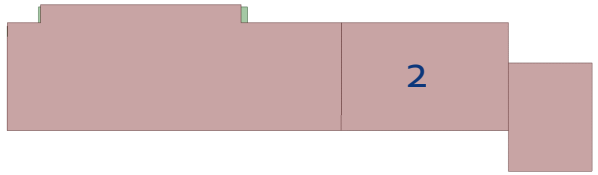

Results

Comparison with the previous results: Total displacement

Previous result

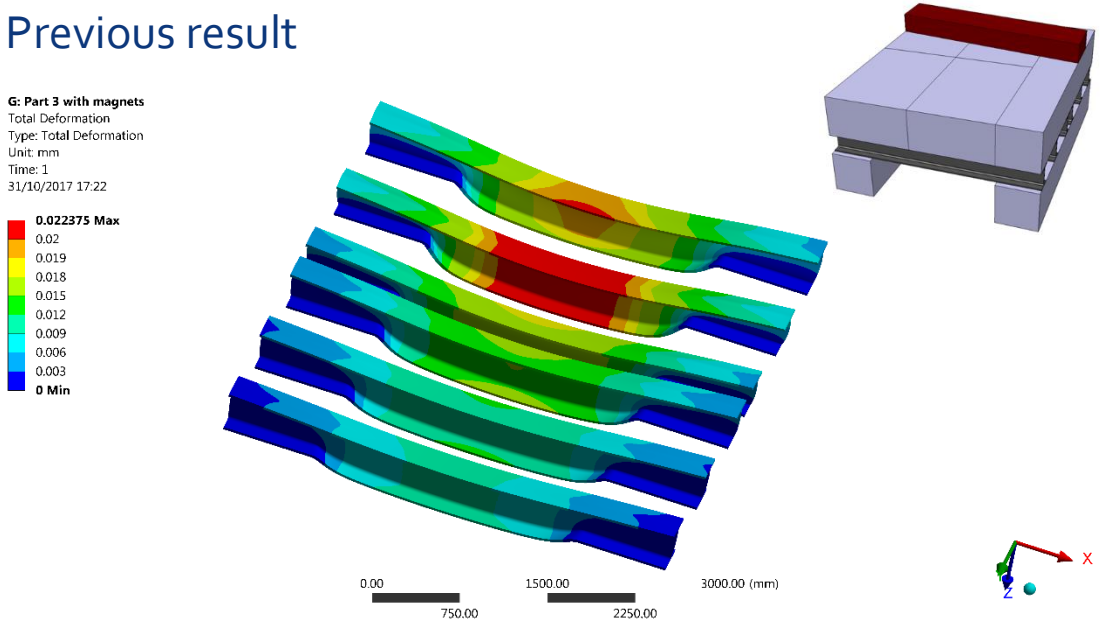

- Maximum displacement 0.02mm
- Load 55t

Updated analysis

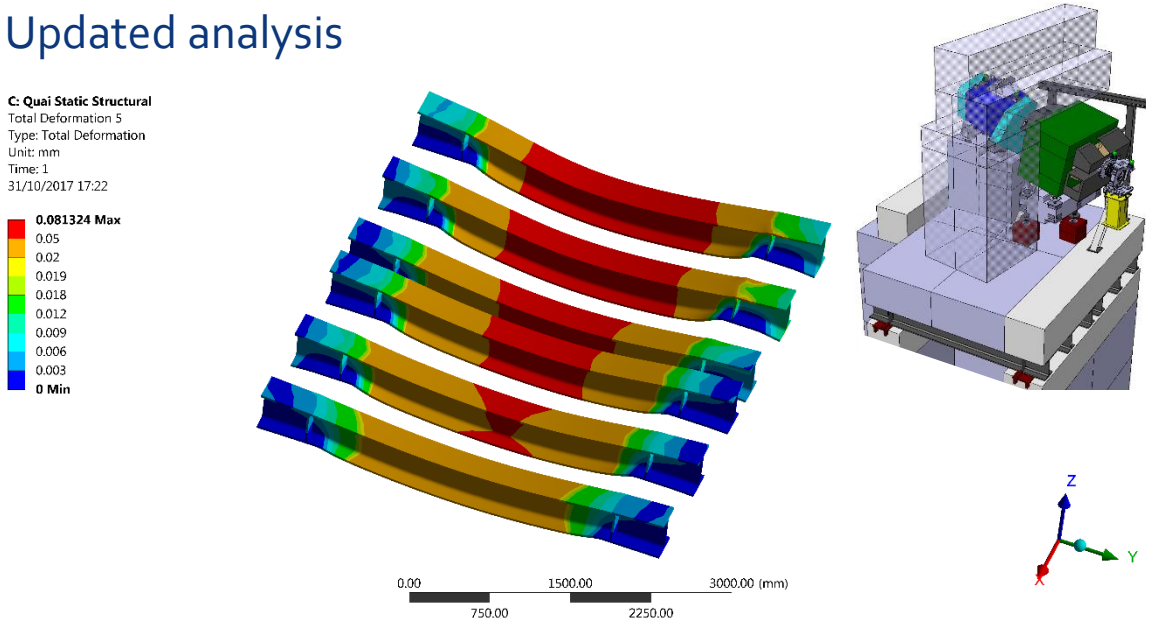

- Maximum displacement 0.08mm
- Load 96t

Load applied increase 42 % from the previous simulation to the updated version.

Larger displacement in updated analysis but still < 1mm with the same distribution.

Reinforcements are according to the load increase.

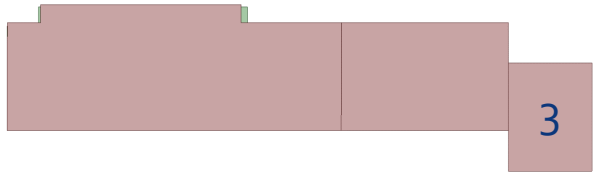

Results

Safety factor

Safety factor 7 for yield of HEB profiles → Material S235JRG2 235Mpa. Higher for total failure.

- Behaviour of the support structure with the increase of the total applied load:

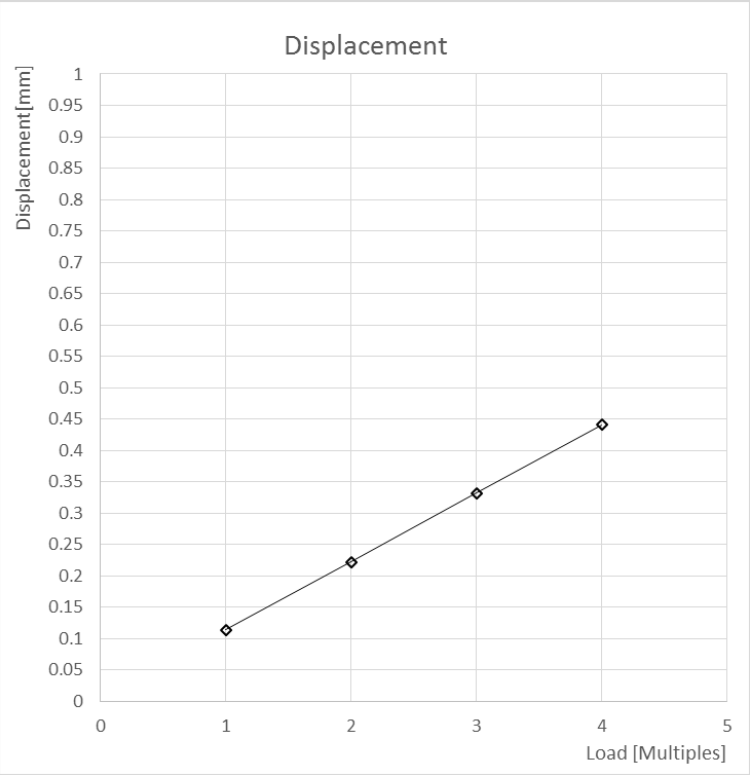

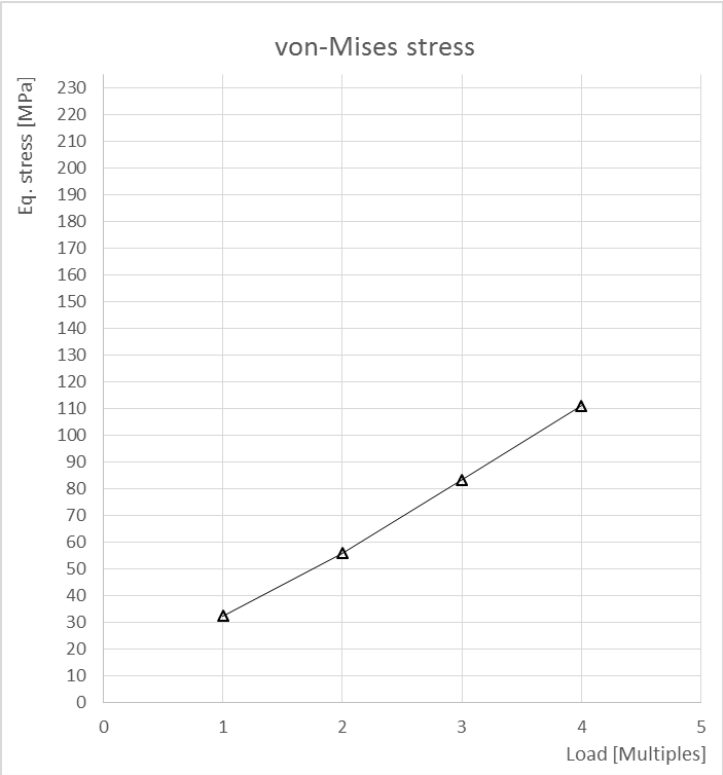

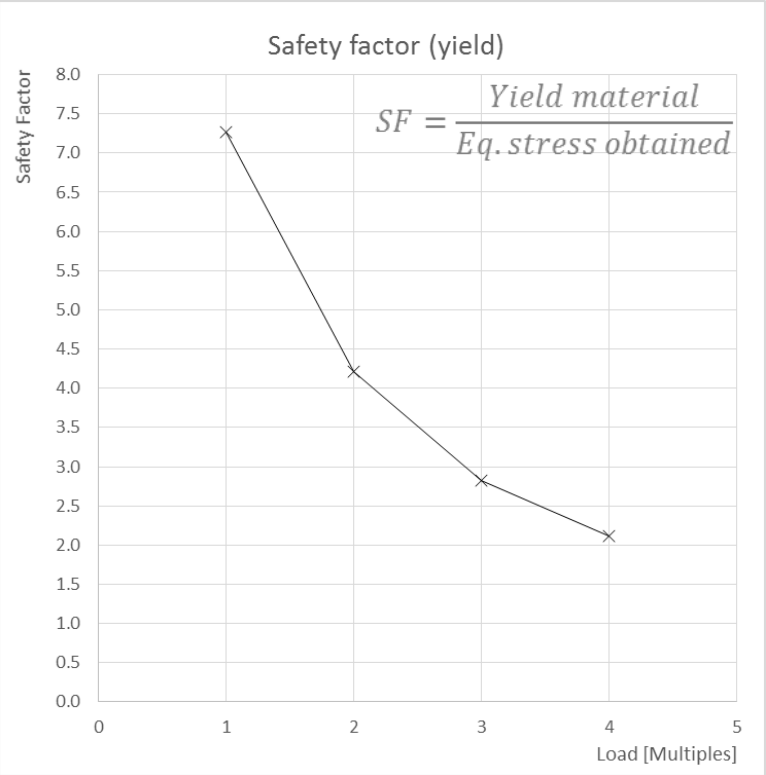

With the increase of the load (2x the design load, 3x the design load,…) the displacement and von-Mises stress assume a linear behaviour assuming that the centre of gravity remains the same (i.e. the load distribution remains the same).

The yield safety factor for the HEB profiles decreases slower as the applied load increases (until permanent deformation SF=1).

Results

Supports reaction and floor load

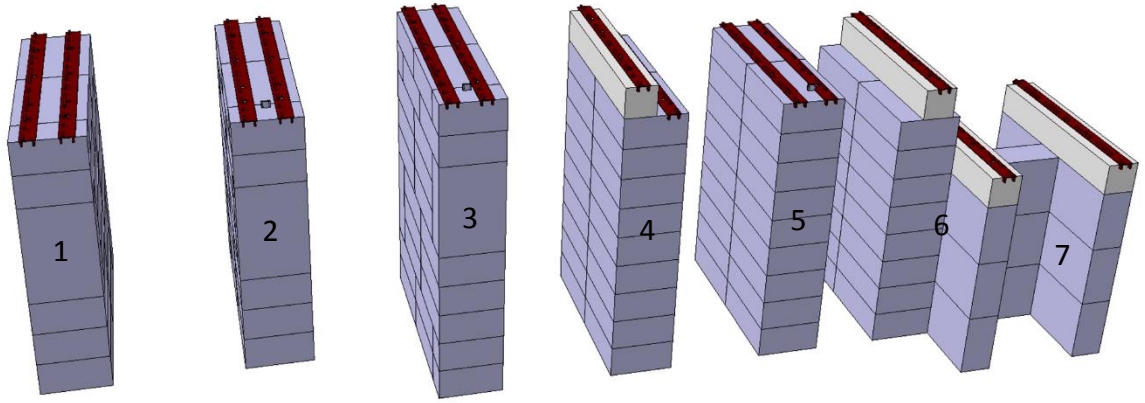

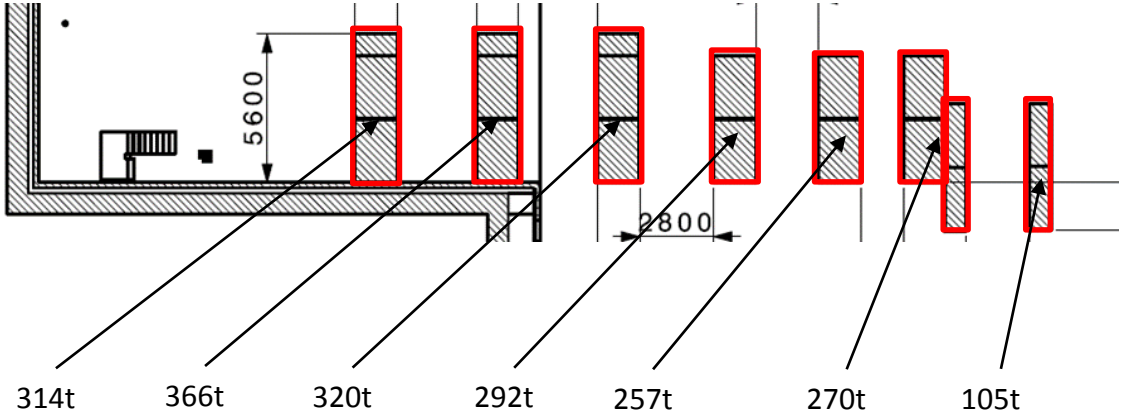

Support Reactions and Floor Load							
Section	Suppot	Support Weight [kg]	Basement Load [kg]	Floor Load [ANSYS] [kg]	Floor Load [Calculated] [kg]	Difference [kg]	Difference [%]
1	1	140000	68358 106418	314775	318000	-3225	1.0
	2	140000	120102 106214	366316	386000	-19684	5.1
	3	173000	77904 69570	320474	290000	30474	9.5
	4	136000	76328 79961	292289	285000	7289	2.5
2	5	128000	73972 55361	257334	231000	26334	10.2
	6	172000	54324 44636	270960	312000	-41040	13.2
3	7	50000	55893	105893	96000	9893	9.3
		Total	989041	1928041	1918000	10041	0.5

Summary

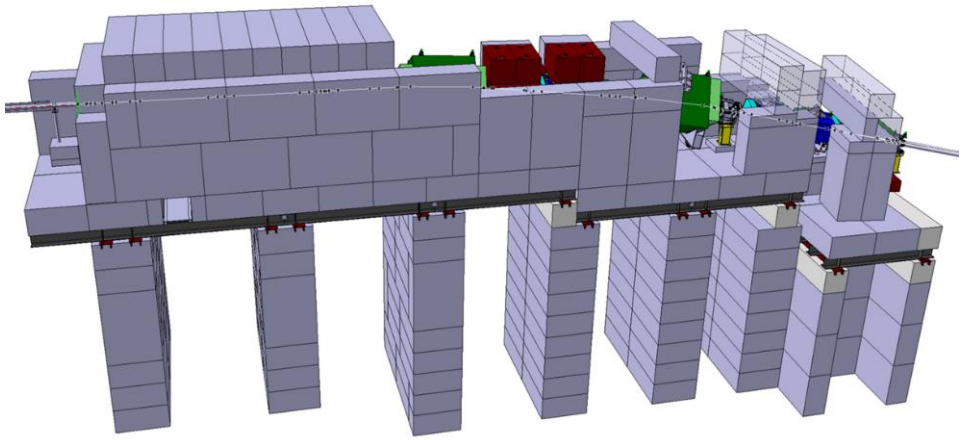

- Total weight 1927t
- Weight on the HEB profiles: 955.8t (service load)
- Max. displacement HEB400 profiles: 0.1mm
- Max. von-Mises stress HEB400 profiles : 32MPa
- Safety Factor: 7 (yield for S235JRG2: 235Mpa)

Compared updated simulation results with previous simulations shows that the reinforcements are a valuable addition for the structural behavior of the HEB400 profiles.

No concerns regarding displacements or the deformations.

The HEB400 profiles structure supporting the shielding, dump and H4 beamline is well designed.

Spare slides

Analysis with displacement supports

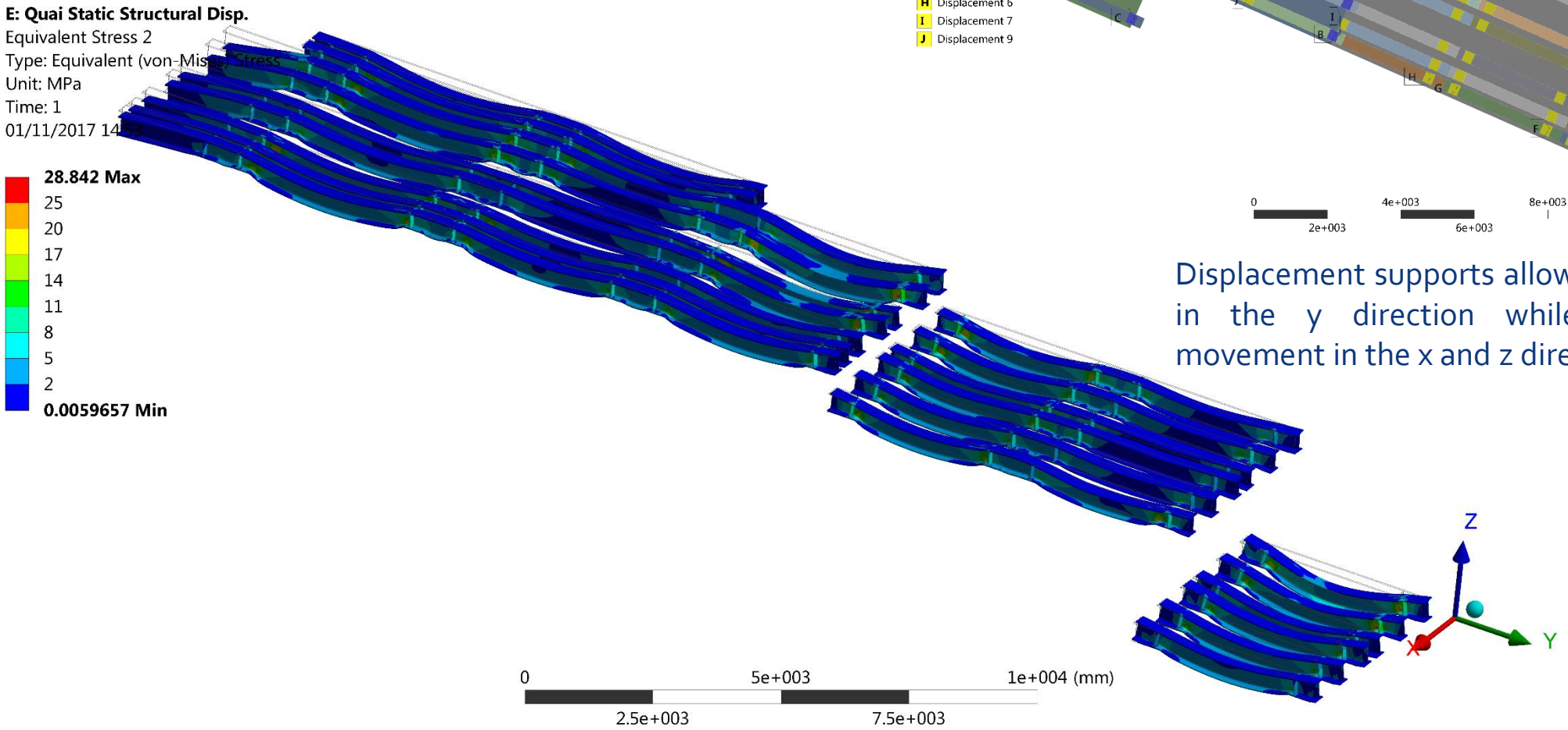

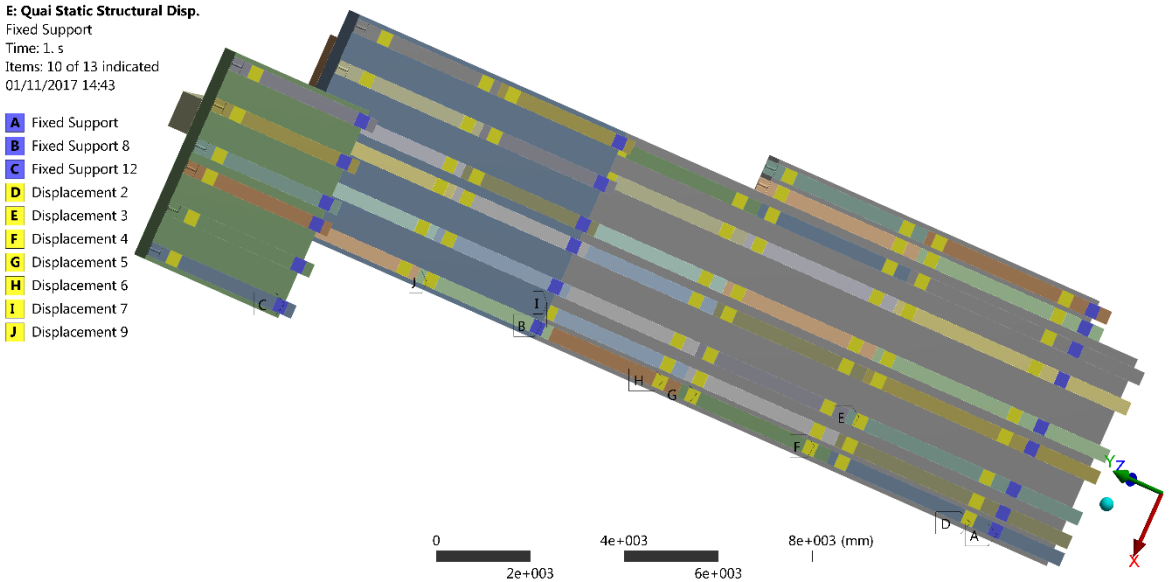

Displacement supports allowing the movement in the y direction while restraining the movement in the x and z directions.

- Maximum eq. stress of 28MPa in the larger section of the Quai. Maximum displacement 0.1mm

Spare slides

Non linear analysis

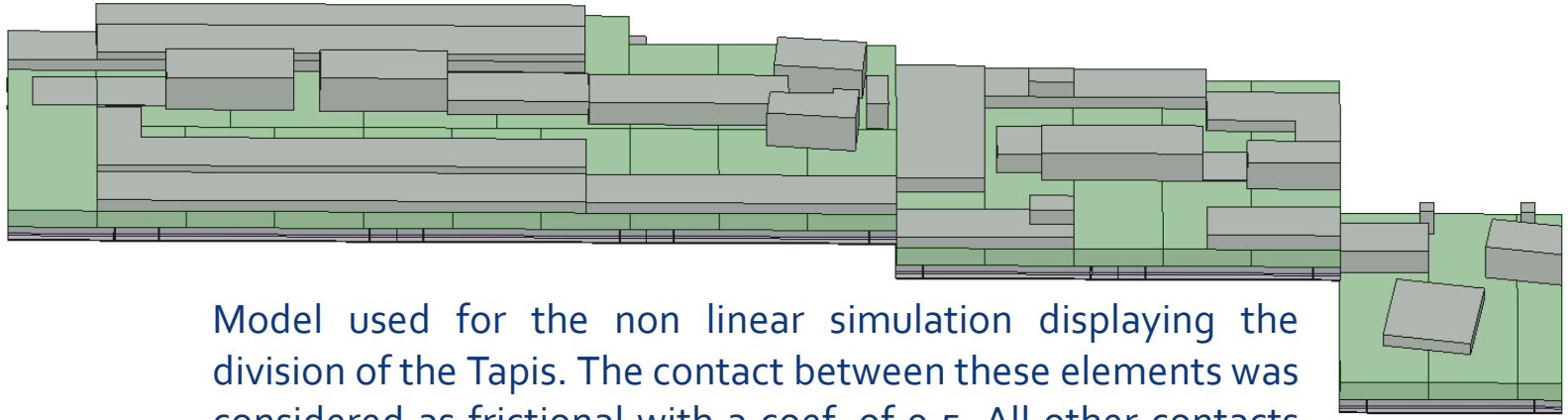

Model used for the non linear simulation displaying the division of the Tapis. The contact between these elements was considered as frictional with a coef. of 0.5. All other contacts were kept as bounded.

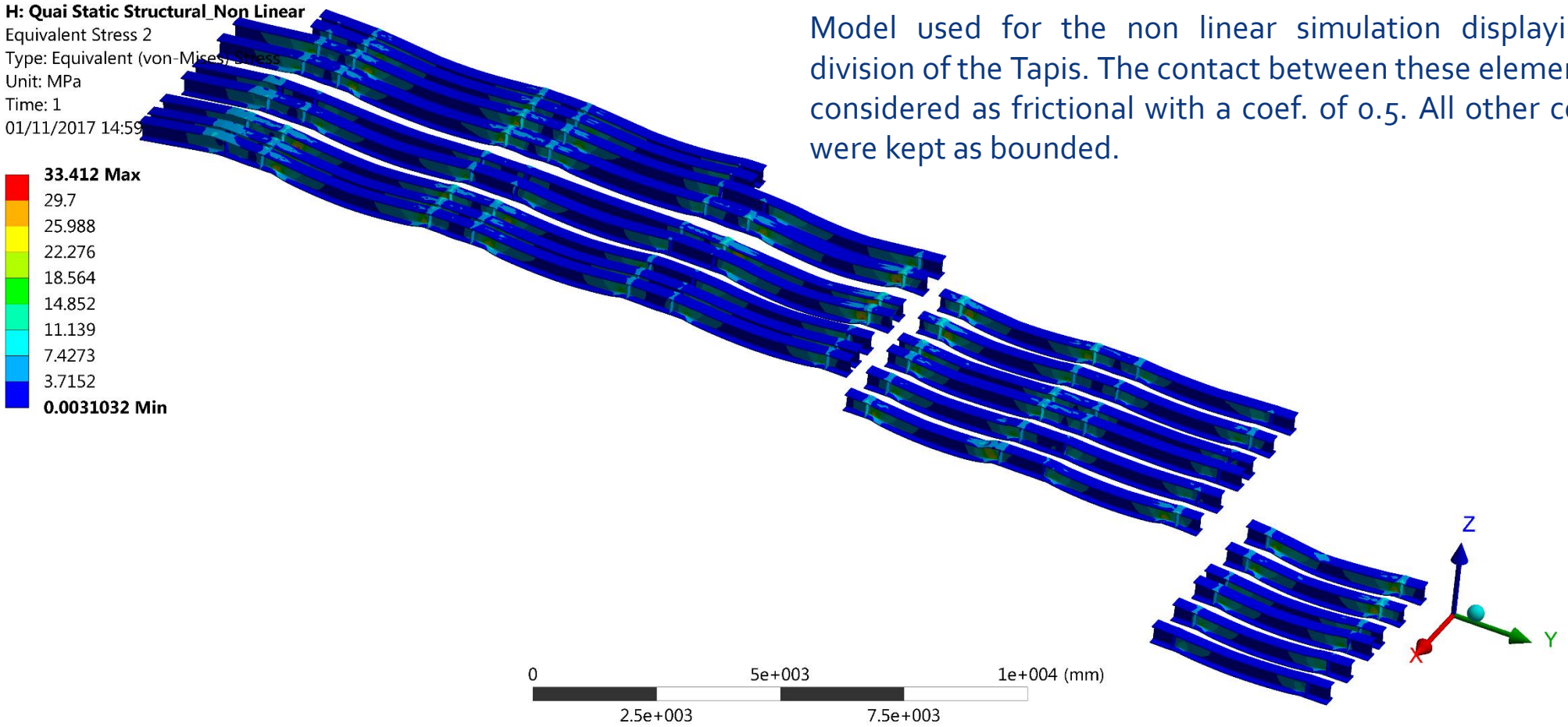

- Maximum eq. stress of 33MPa in the larger section of the Quai. Maximum displacement 0.25mm

Spare slides

Non linear analysis with unbalanced load distrib

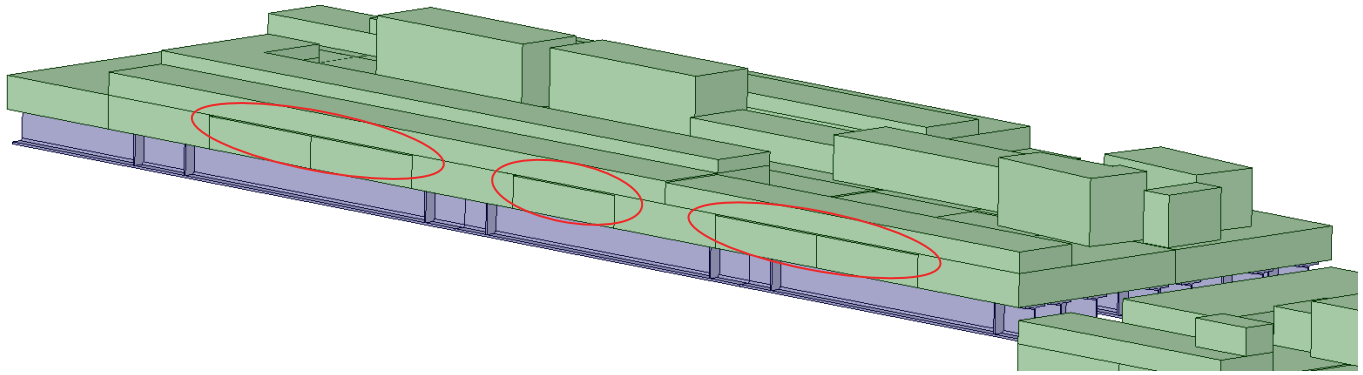

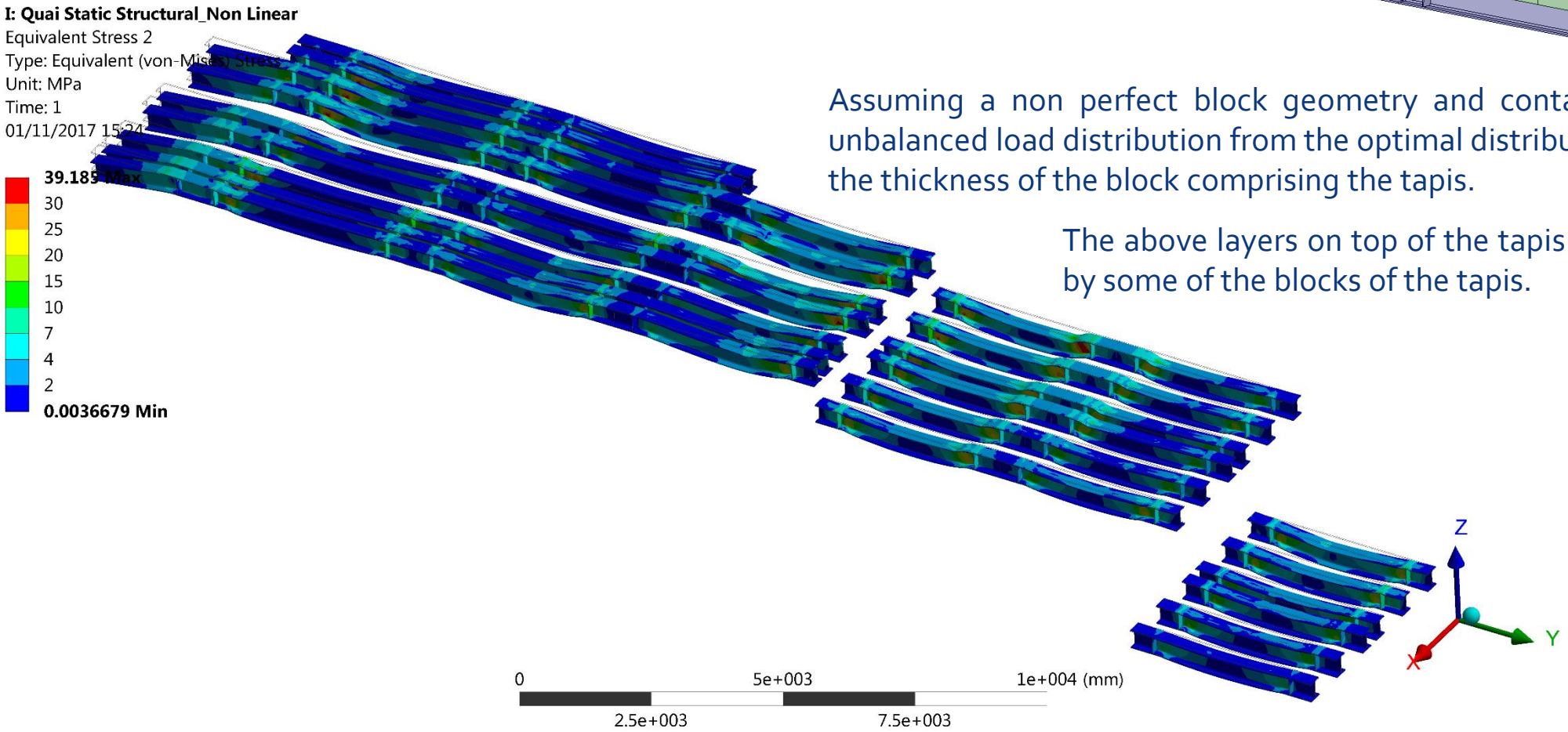

Assuming a non perfect block geometry and contact which can lead to unbalanced load distribution from the optimal distribution. i.e. differences in the thickness of the block comprising the tapis.

The above layers on top of the tapis will be only supported by some of the blocks of the tapis.

- Maximum eq. stress of 39MPa in the larger section of the Quai. Maximum displacement 0.26mm

Spare slides

Non linear analysis

With no friction and a large deformation (ideal system)

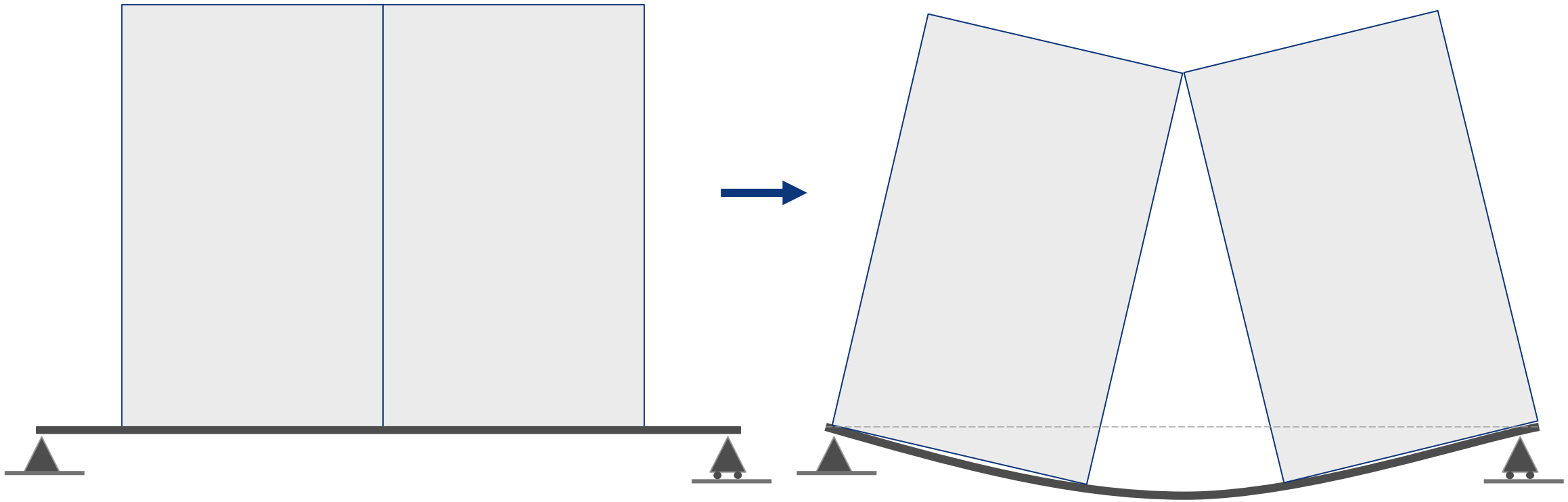

Not the case! Friction coef=0.5 and deformation <0.26mm (in the worst simulated scenario)

Spare slides

Detailed non linear analysis of a critical region:

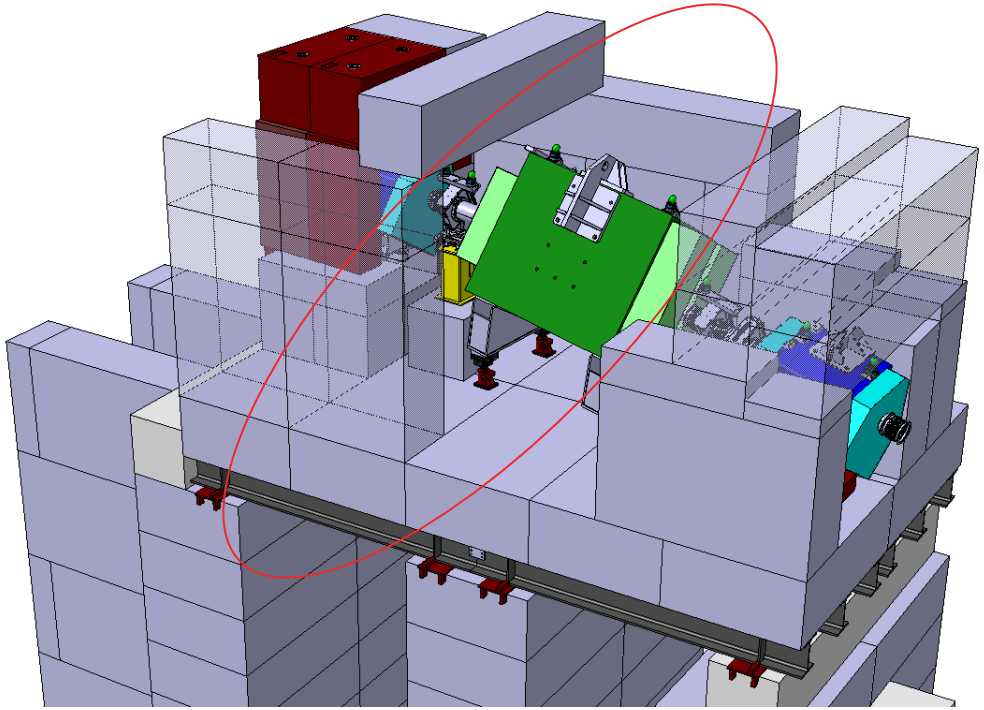

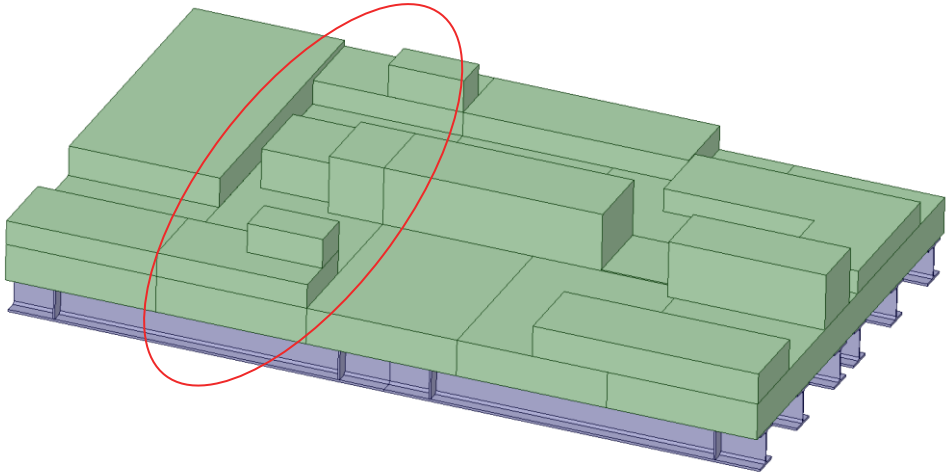

All the contacts of the highlighted structure with the adjacent blocks are considered as frictional with a friction coef. of 0.5.

Spare slides

Detailed non linear analysis of a critical region:

Non linear model

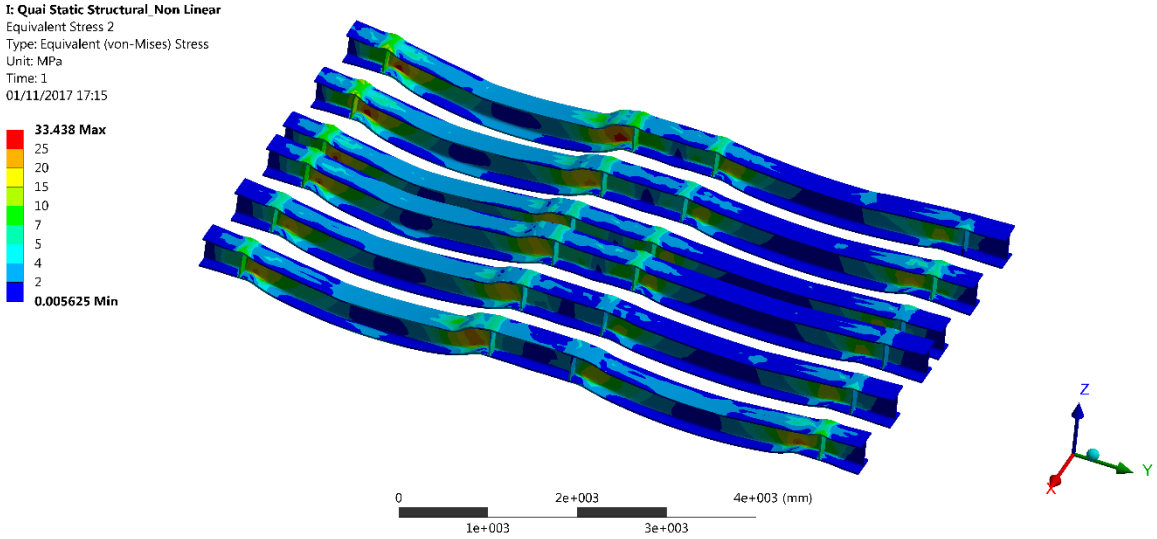

Linear model

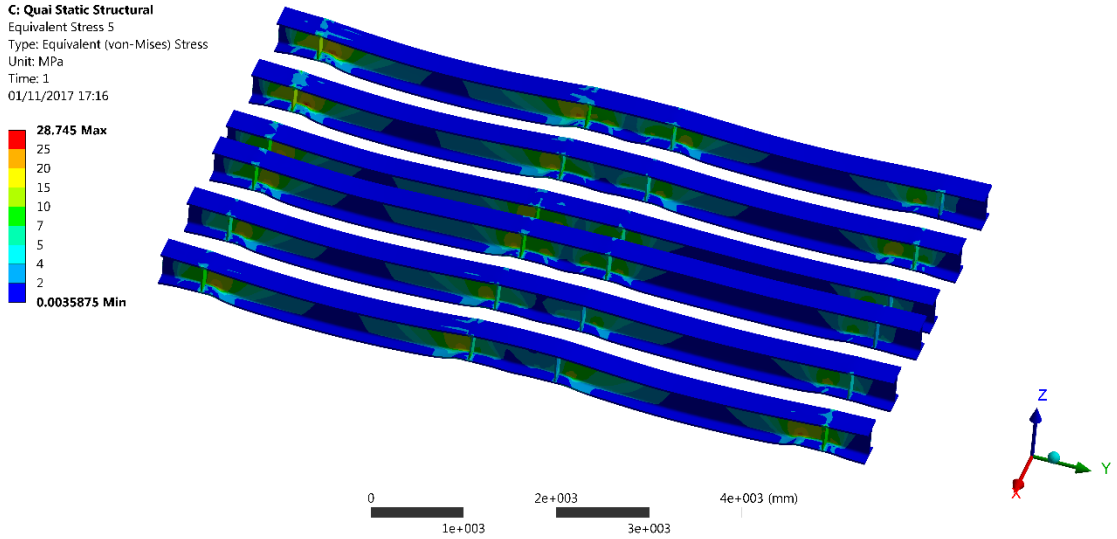

The difference between von-Mises stress for both models is less than 5 Mpa (14%) for the same initial conditions less the frictional contacts. In this case the approximation given by the linear model is considered satisfactory and the safety factor achieved in the simulation (7 to yield) is enough to allow a small error margin.