Silicon tracker integration

Mengqing Wu
on behalf of the LYCORIS group

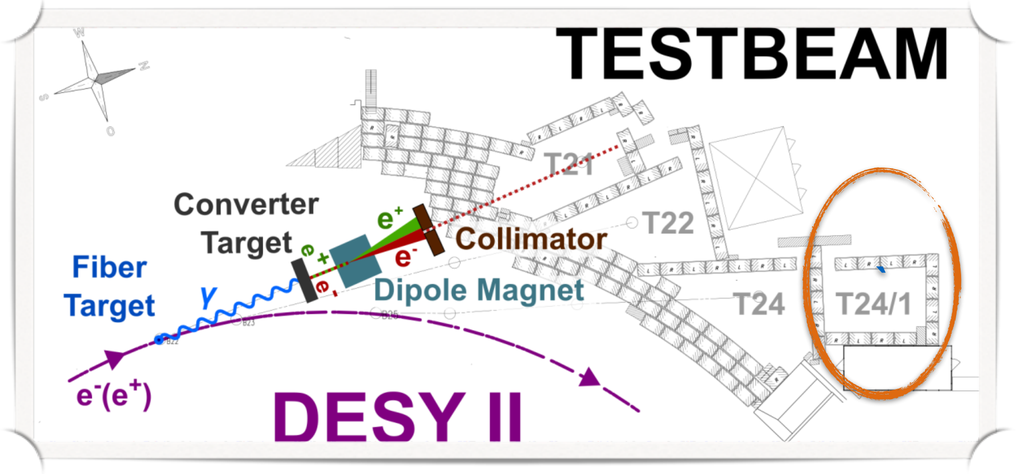

Bologna, 24/04/2018
AIDA2020 3rd Annual Meeting

HELMHOLTZ RESEARCH FOR GRAND CHALLENGES

This project has received funding from the European Union's Horizon 2020 Research and Innovation programme under Grant Agreement no. 654168.

AIDA 2020

DESY.

WP15.3 task: Silicon strip reference tracker

LYCORIS: a Large Area X-Y Coverage Readout Integrated Strip Telescope

- DESY testbeam infrastructure:
  3 test beam areas w/ 1-6 GeV e-.
- T24/1 area: 1T solenoid to put DUT in magnetic field
  - Movable, internal diameter 85 cm;
  - Possible to install EUDET-style pixel telescope,

Some use cases require:

- **Large activate area**: bent trajectories, smeared electron momenta after magnet wall (~25% X_0);
- **Limited space** (~3.5 cm) left for each telescope arm, for large user device, e.g. TPC …

—> Build a new telescope to fulfill the above requirements in a **complete package**

- DAQ: **EUDAQ2**
- TLU: **AIDA2020-style TLU**

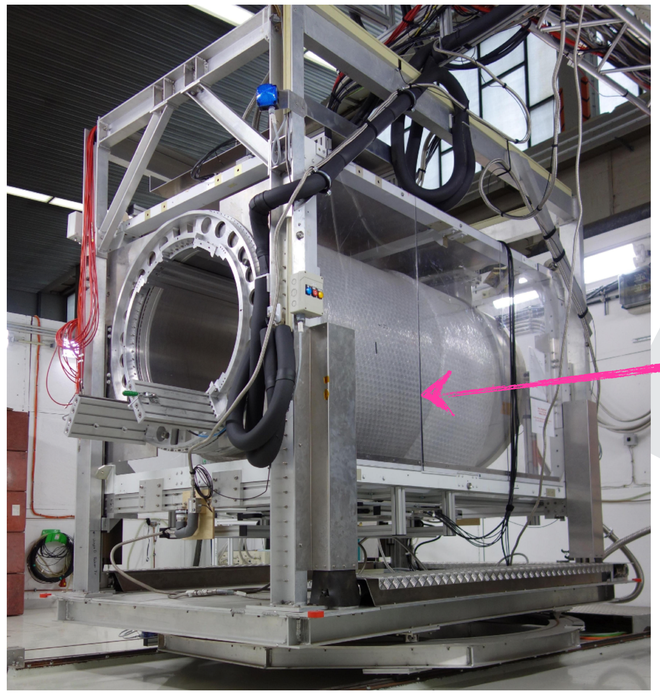

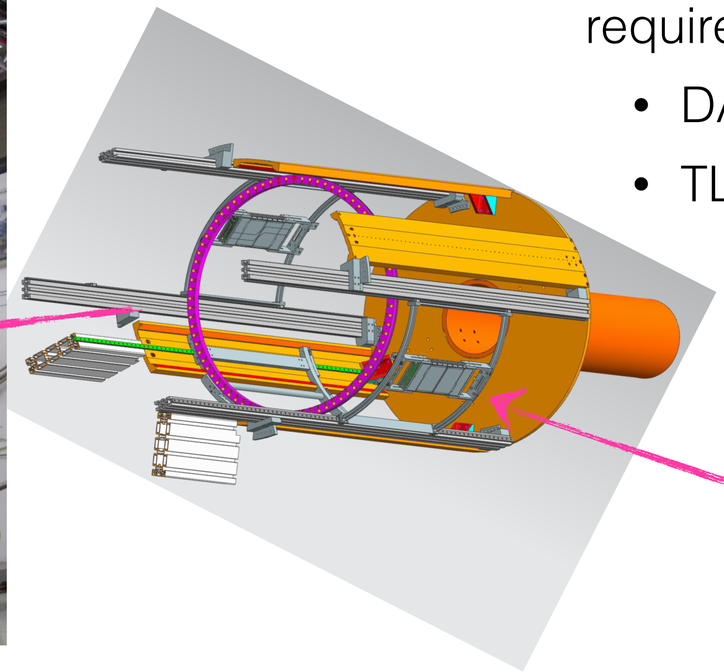

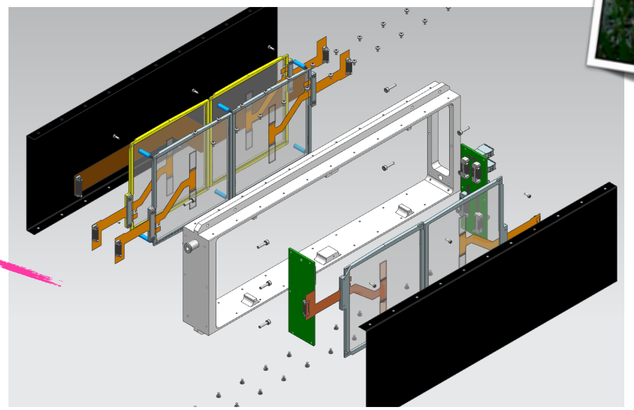

EUDAQ2 integration: status

Github repo: https://github.com/Lycoris2017/EUDAQ-Lycoris

- Sensor **readout chip KPiX**: has its **own DAQ**
- EUDAQ2 Modules:
  - dedicated **RunControl** module with its **GUI customized** with more **info**
  - dedicated **Producer/ DataCollector** modules with KPiX DAQ soft as dynamic lib
  - corresponding **DataConverter**s in progress

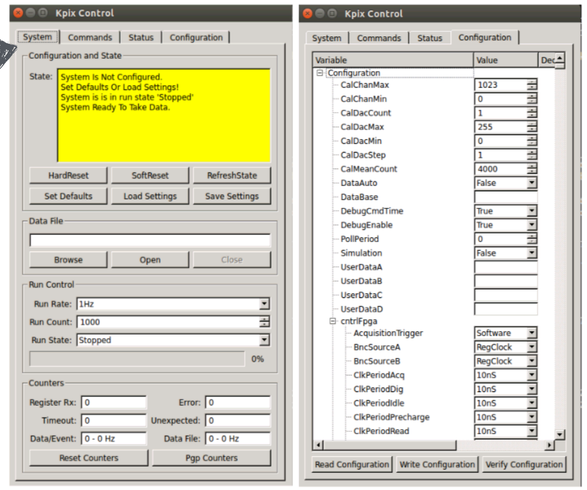

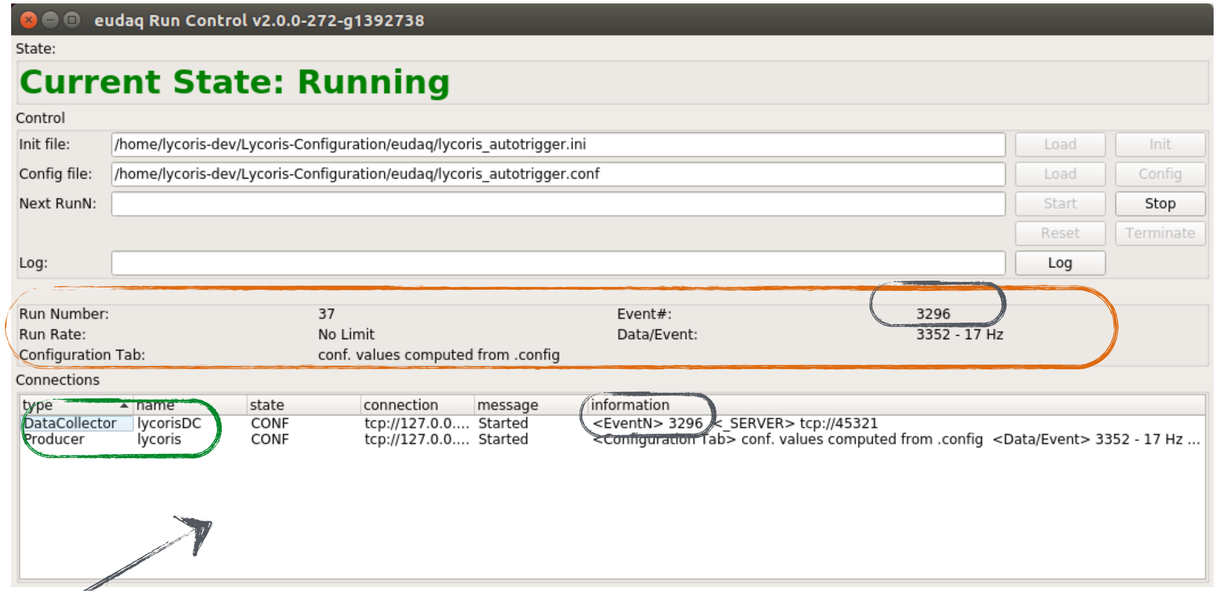

Branch: lycoris.eudaq2... | EUDAQ-Lycoris / user / aidastrip / module / src / | Create new file | Upload files | Find file | History

This branch is 2 commits ahead, 1 commit behind lycoris.eudaq2.master. | Pull request | Compare

Mengqing Wu lycoris analyzer from raw to root updated — Latest commit 05611ff on Mar 12

..

kpixDataCollector.cc	DoReceive() func updated to adapt to changes in main libs from centra...	6 months ago
kpixProducer.cc	lycoris analyzer from raw to root updated	a month ago
kpixRawEvt2LCEventConverter.cc	kpix event converter update, with changes in CMakeFiles for tbsc clea...	7 months ago
kpixRawEvt2StdEventConverter.cc	update for kpix data converting	2 months ago

EUDAQ2 integration: status

Store & convert data

- EUDAQ2 output data in format: **.raw** and **KPiX binaries**;
- Data **convert**ed **offline** for analyses in progress:
  - **customized CliConverter** executable
  - from eudaq raw to histograms in **ROOT**
    - for telescope development (time distribution, ADC per channel …)
    - Status: **done**, but **in upgrading** with ongoing sensor tests.
  - from eudaq raw to **LCIO event**
    - for full telescope data analysis
    - Status: **constructed**, **pending for event definition** as input for reconstruction software.

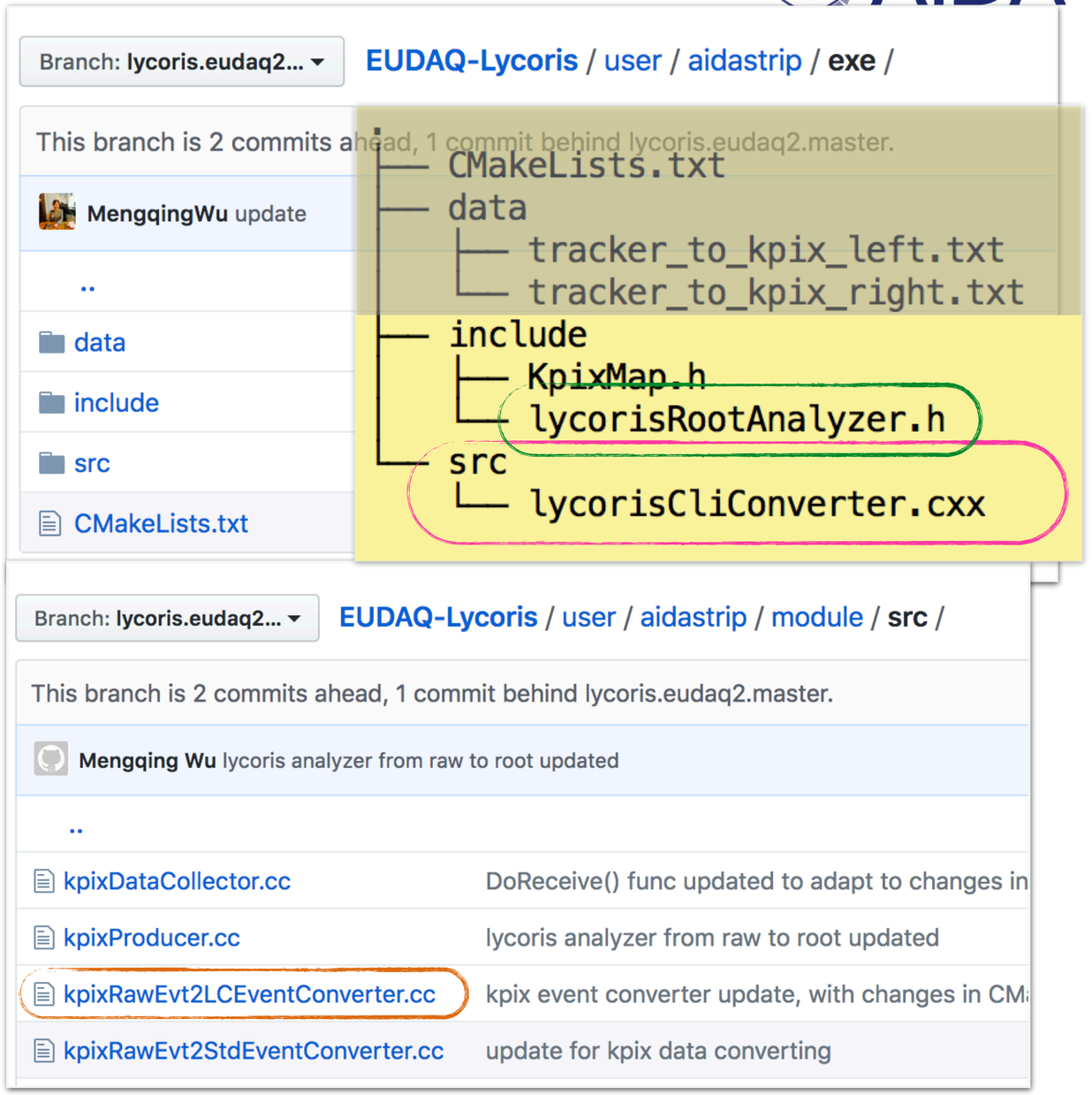

EUDAQ2 integration: RunControl & Configurables

Status

- KPiX specialized configurables controllable in EUDAQ config file —>

Done:

- Diff. config files prepared: pedestal/ source/calibration
- Can control how many KPiX cycles
- Multiple output files available

```
##################################################
##----------------LYCORIS-KPiX-------------------##
##################################################
[RunControl]
#KPIX_STOP_RUN_AFTER_N_SECONDS=10  # stop kpix when Timeout(s)
PRODUCER_TO_CONTROL="Producer.lycorisBkg"
#PRODUCER_TO_CONTROL="Producer.lycoris"

##--> pedestal run:
[DataCollector.lycorisBkgDC]
DISABLE_PRINT = 1
EUDAQ_FW_PATTERN=/scratch/data/tracker_test/eudaq/pedestal/kpix_$12D_run$6R$X

[Producer.lycorisBkg]
## Choose a data collector by its name:
EUDAQ_DC="lycorisBkgDC"
DISABLE_EUDAQ_BIN=0
EUDAQ_DataBase="/scratch/data/tracker_test/eudaq/pedestal"
DISABLE_KPIX_BIN=0

KPIX_DEBUG="False"
KPIX_CONFIG_FILE="/home/lycoris-dev/kpixDaq/kpix.master/xml/tracker_pedestal.xml"
KPIX_DataBase = "/scratch/data/tracker_test/eudaq/pedestal"
## DataAuto on: auto-generated DataFile name based on DataBase;
##              DataFile no use in this case;
KPIX_DataAuto = "True"
KPIX_DataFile = "/scratch/data/daq-dev/eudaq_data.bin"
##------ Run Control:
# temporarily choose run state here: Running, Running Calibration, Evr Running
KPIX_RunState = "Running"
KPIX_RunCount = 3000 # not work unless you break kpix data streaming @2018-Feb-13
```

EUDAQ2 integration: RunControl & Configurables

Todos

- KPiX specialized configurables controllable in EUDAQ config file —>

Done:

- Diff. config files prepared: pedestal/ source/calibration
- Can control how many KPiX cycles
- Multiple output files available

Todo:

- add/rm configurables in EUDAQ —> need more commissioning experience;
- document all the LYCORIS relevant configurables.

```
##############################################
##----------------LYCORIS-KPiX----------------
##############################################
[RunControl]
#KPIX_STOP_RUN_AFTER_N_SECONDS=10  # stop kpix whe
PRODUCER_TO_CONTROL="Producer.lycorisBkg"
#PRODUCER_TO_CONTROL="Producer.lycoris"

##--> pedestal run:
[DataCollector.lycorisBkgDC]
DISABLE_PRINT = 1
EUDAQ_FW_PATTERN=/scratch/data/tracker_test/eudaq/

[Producer.lycorisBkg]
## Choose a data collector by its name:
EUDAQ_DC="lycorisBkgDC"
DISABLE_EUDAQ_BIN=0
EUDAQ_DataBase="/scratch/data/tracker_test/eudaq/p
DISABLE_KPIX_BIN=0

KPIX_DEBUG="False"
KPIX_CONFIG_FILE="/home/lycoris-dev/kpixDaq/kpix.r
KPIX_DataBase = "/scratch/data/tracker_test/eudaq/
## DataAuto on: auto-generated DataFile name basec
##              DataFile no use in this case;
KPIX_DataAuto = "True"
KPIX_DataFile = "/scratch/data/daq-dev/eudaq_data
##------ Run Control:
# temporarily choose run state here: Running, Runn
KPIX_RunState = "Running"
KPIX_RunCount = 3000 # not work unless you break
```

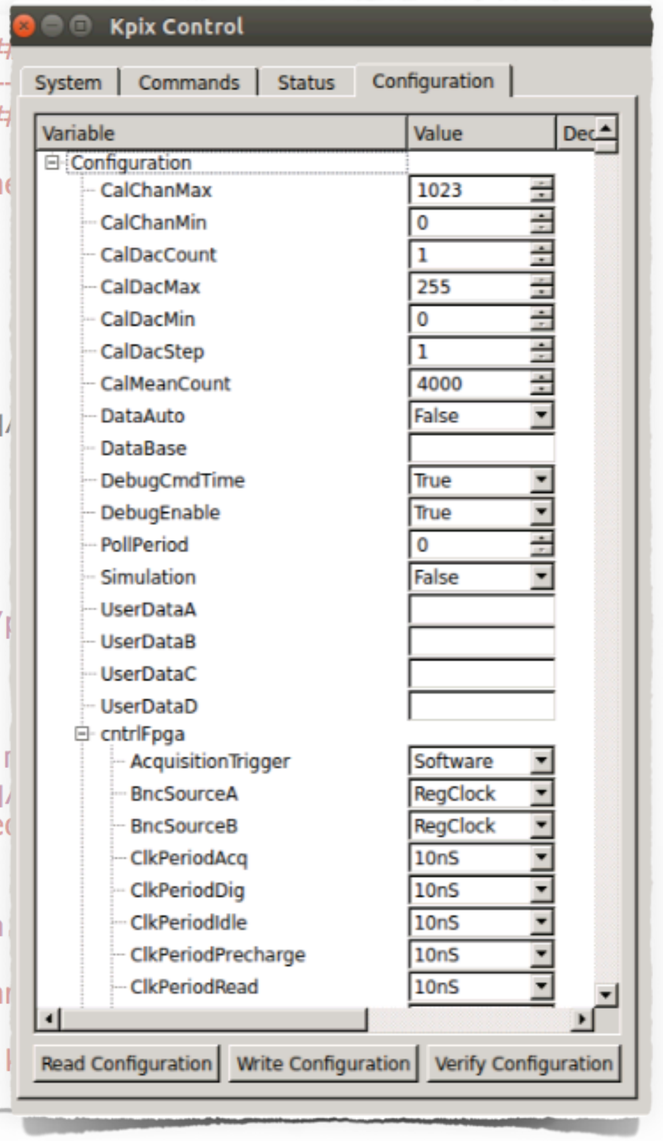

EUDAQ2 integration: data buffering

Validation

- EUDAQ2 using FIFO to stream data from KPiX DAQ
  - many other ways tried, failed (time shift…)
- Validate data collected by EUDAQ2:
  - compare w/ data from KPiX DAQ.
- **Target**: sanity check w/ diff. run conditions (external trigger/internal trigger, sync/unsync to beam)
  - data output from both KPiX DAQ side and EUDAQ2 side in the same run.
- **Status**: validated
  - internal trigger: perfect agreed
  - external trigger: agreed w/ understood delay issue (not affect using EUDAQ2)

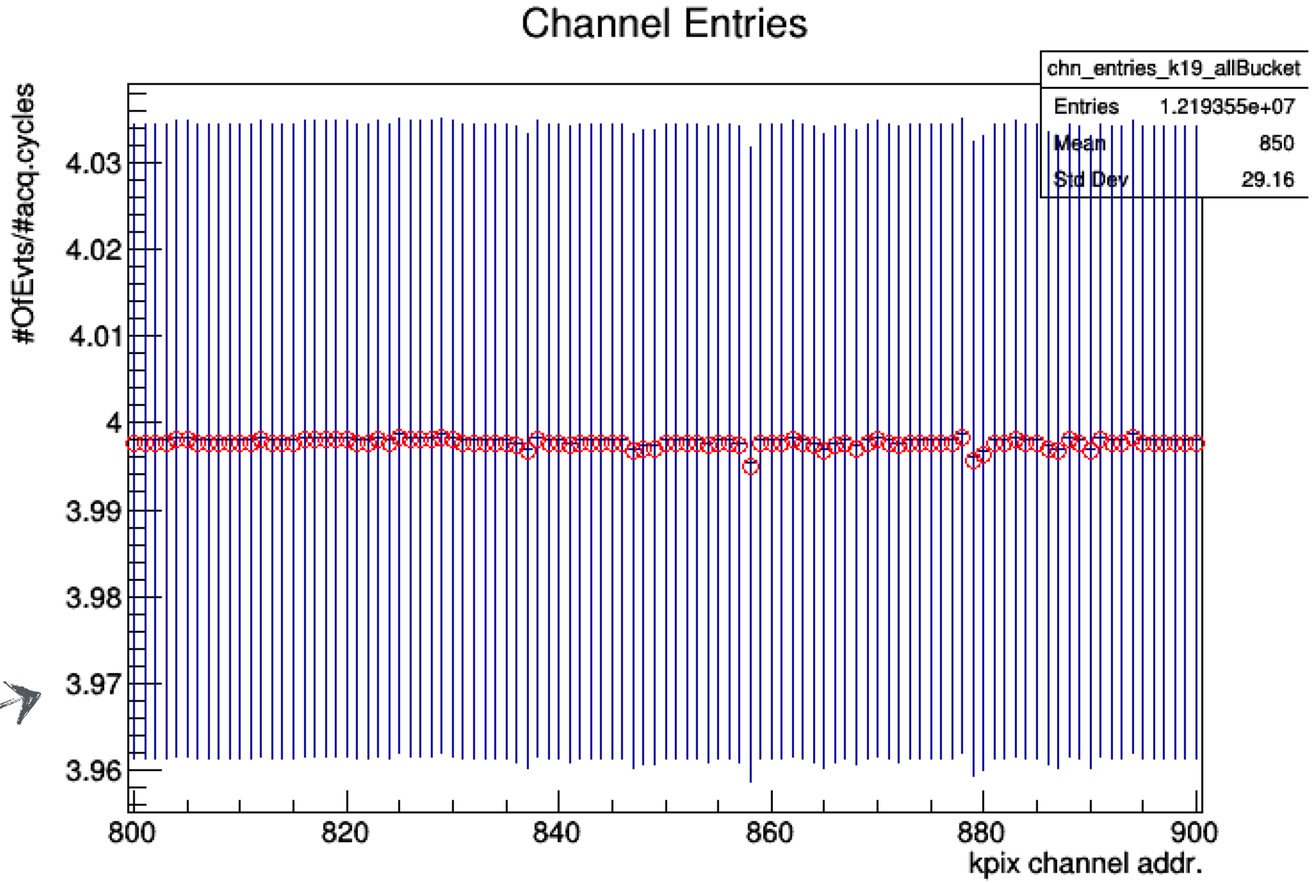

Red: KPiX binaries
Blue: EUDAQ raw

TLU integration: KPiX sync to DESY beam

Status

- **KPiX** performs w/ power cycle (chip developed for an ILC environment);
- **DESY-II** has its own cycle —> synchronization needed to maximize particle events when KPiX is active to take data;
- KPiX synced to **TLU** via a common clock;

—> **Synchronization** needed, implemented via a shutter signal generated by TLU to start the KPiX acq. Cycle

- **KPiX** can **timestamp** event using **TLU global clock**;
- flexible to accommodate different DUTs (next slide)

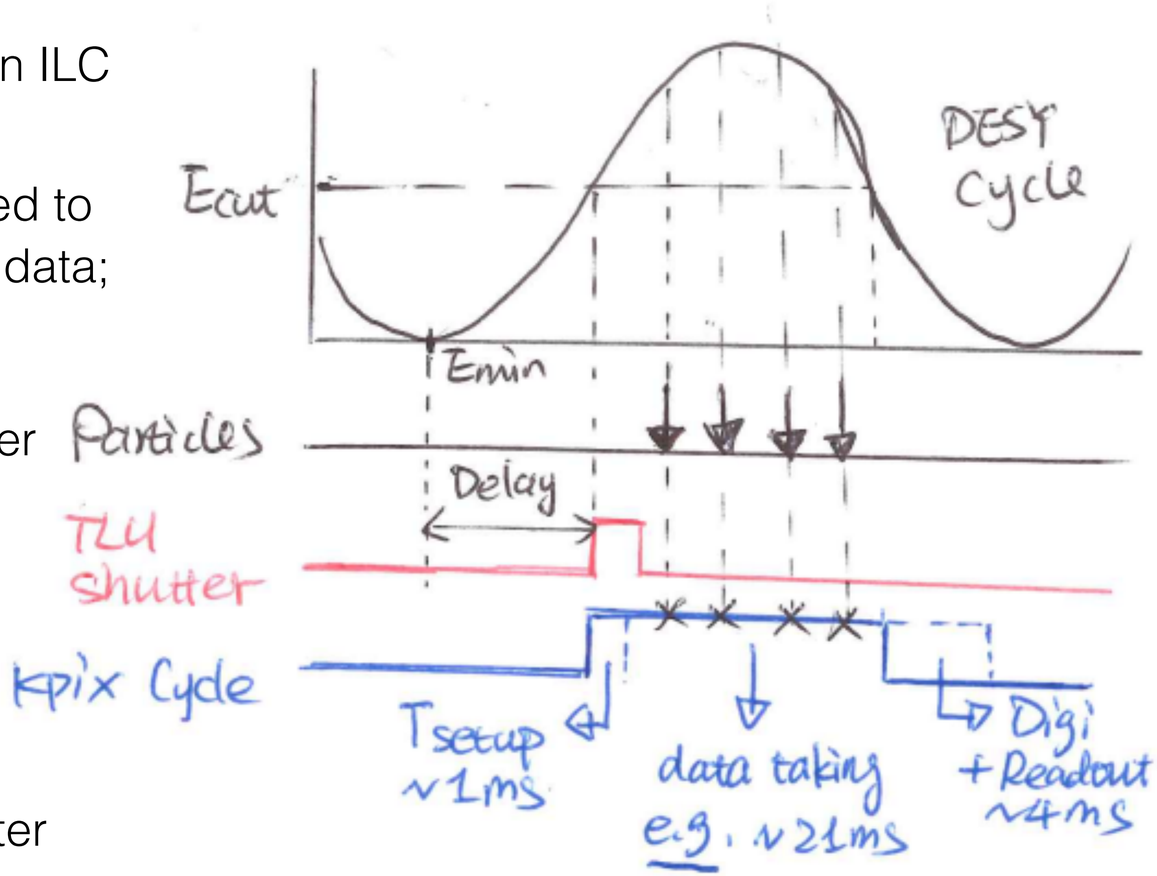

Status:

- idea **tested/validated** by feeding a manipulated shutter signal to KPiX
- —> to test with an AIDA TLU.

TLU integration: KPiX sync to DUTs

DUT syn to TLU

from David Cussans

In general, DUTs can be categorized: sync to TLU or not

1. a DUT sync to the TLU:
   - The **TLU** common **global clock** to **sync** all devices;
   - Activation (shutter) issued by TLU
   - Busy signals (TLU state idle) to TLU: either global or local
     - Global: no trigger when any device is busy;
     - Local: trigger continuously issuing though some device busy

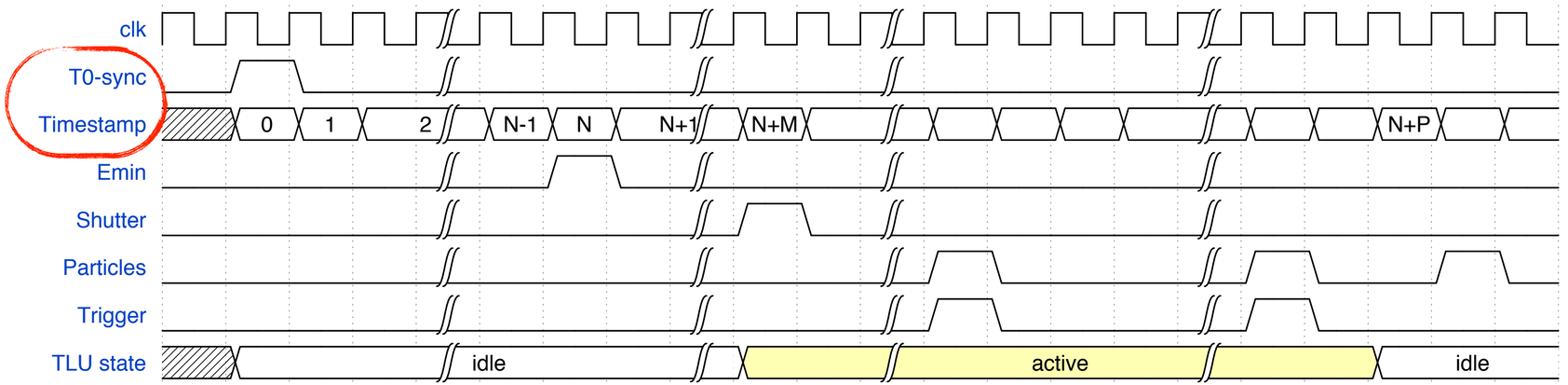

Shutter: activation signal
T0_sync: 1 per run, common start signal

TLU integration: KPiX sync to DUTs

DUT syn to TLU

from David Cussans

In general, DUTs can be categorized: sync to TLU or not;

1. a DUT sync to the TLU:
2. a DUT unsync to the TLU:
   - Synchronization by **trigger counting**;
   - Global busy used: no trigger sent, when either device is busy;
   - Add-on TLU func: **configurable delayed** TLU active period

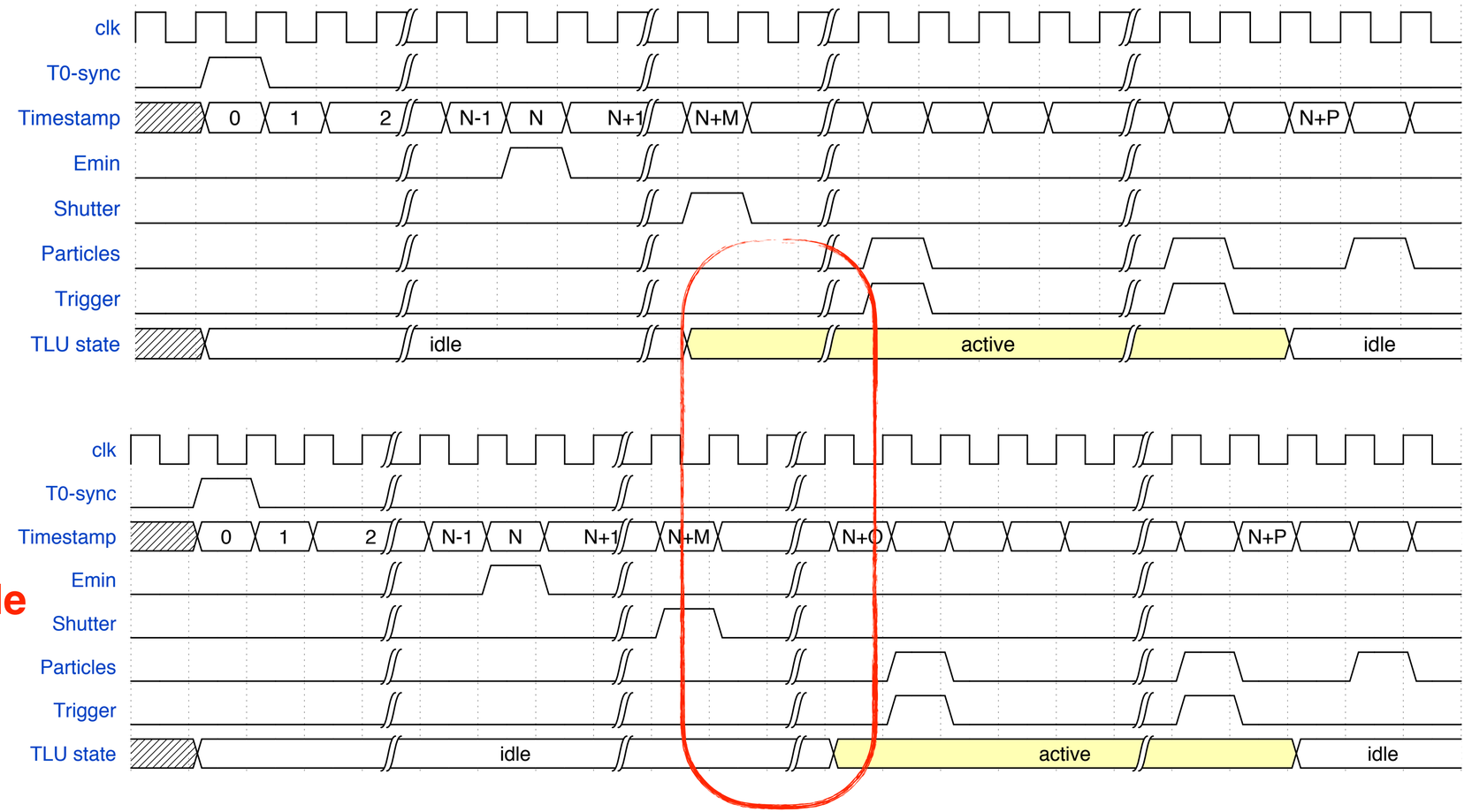

Shutter: activation signal
T0_sync: 1 per run, common start signal

Status:

- new TLU will be issued by end of this month;
- a first use case needed to test.

Status summary & Todo-list

Summary

- **EUDAQ2 integration:**
  - Can do RunControl with KPiX needed configurablesl
  - Validated: The current FIFO data buffering in EUDAQ (w/o changing the KPiX data polling sequence) from KPiX to EUDAQ is validted under different run conditions ():
  - Add-on func: customized CliConverter executable —> output in LCIO or ROOT (histograms).
- AIDA2020-style **TLU integration**:
  - a new TLU will be sent by end of this month;
  - a new DAQ board exp. in May: to use TLU clock with common run start T0_sync;
  - Sync to DESY-II beam: idea tested;
  - Sync to different DUTs: to test.

Todo

- Particle event matching from various devices at reco level —> Event definition?
- To test new TLU with telescope, and with telescope and a DUT.

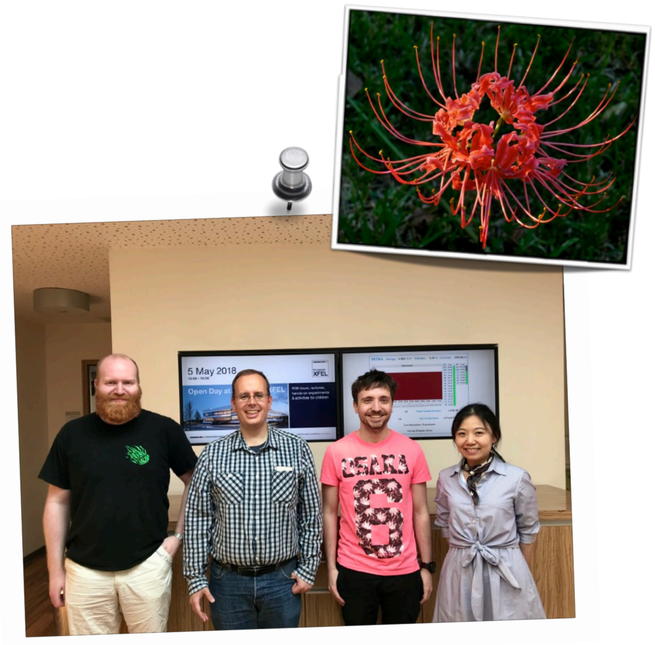

Status summary & Todo-list

Summary

- **EUDAQ2 integration:**
  - Can do RunControl with KPiX needed configurablesl
  - Validated: The current FIFO data buffering in EUDAQ (w/o changing the KPiX data polling sequence) from KPiX to EUDAQ is validted under different run conditions ():
  - Add-on func: customized CliConverter executable —> output in LCIO or ROOT (histograms).
- AIDA2020-style **TLU integration:**
  - a new TLU will be sent by end of this month;
  - a new DAQ board exp. in May: to use TLU clock with common run start T0_sync;
  - Sync to DESY-II beam: idea tested;
  - Sync to different DUTs: to test.

Todo

- Particle event matching from various devices at reco level —> Event definition?
- To test new TLU with telescope, and with telescope and a DUT.

Thank you for your attention!

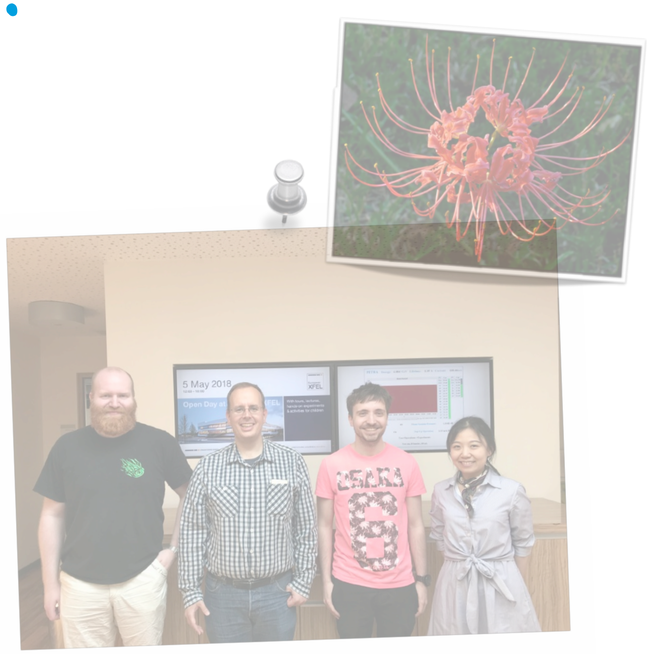

Back-ups

Opening with brief review

- AIDA2020-WP15: To build a new large area strip telescope within solenoid in T24
  - **Demands**:
  - Large curvature coverage
  - Small space (~ 3.5 cm) for large DUT (e.g. TPC)
  - Good spatial resolution along the bending direction (σ_y= ~10 μm)
  - To use EUDAQ as other telescopes at DESY
  - **Review**:
  - SiD strip sensor designed by SLAC,
    - **10x10 cm²** active area, **pitch** of 25 μm, **thickness** of 320 μm, **material budge** of 0.3% X_0;
    - produced by Hamamatsu, delivered end 07/2017
    - bump-bonded by IZM, arrived on 23/11/2017
  - KPiX studied with ECal pixel sensors at DESY
    - well prepared to move to strip sensor.

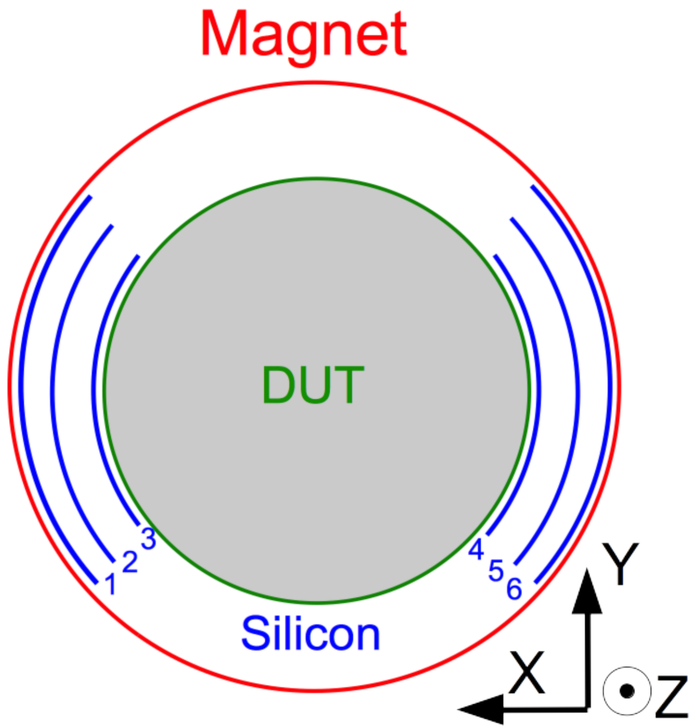

KPiX sync with DUT unsync to TLU

- ALTRO electronics run independently of other devices without sending any time information.
- Matching will be done by exclusion of unmatched events using busy signals

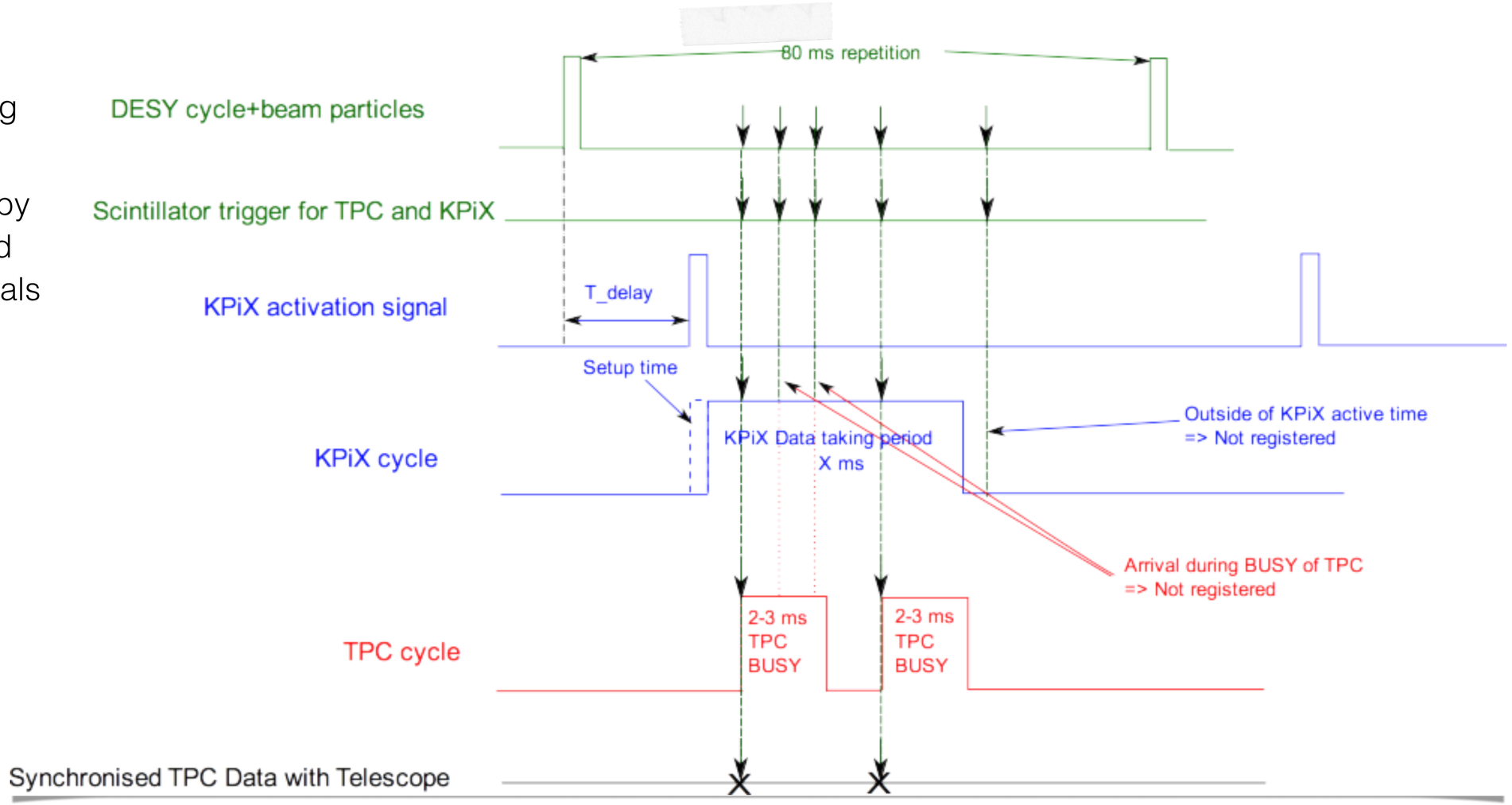

Software status update: lab test succeeded

- KPiX core code not changed anymore
- KPiX data can be outstreaming at same time:
  - from KPiX side (as if running KPiX DAQ);
  - from EUDAQ side: in **both KPiX binary** format and **EUDAQ raw** format.
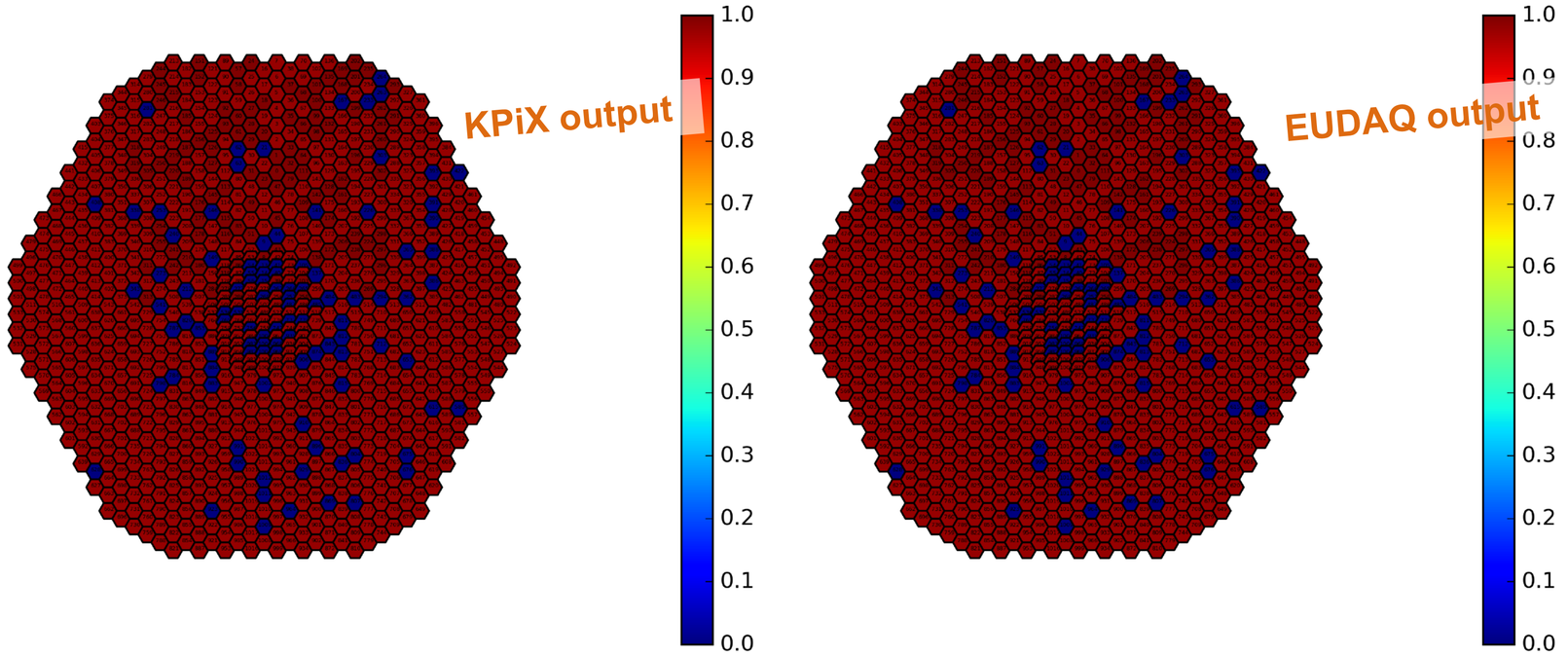
* **event mapping on the ECal sensor for KPiX tests at DESY**
* **same sensor, same bucket**