Exceptional service in the national interest

Sandia National Laboratories

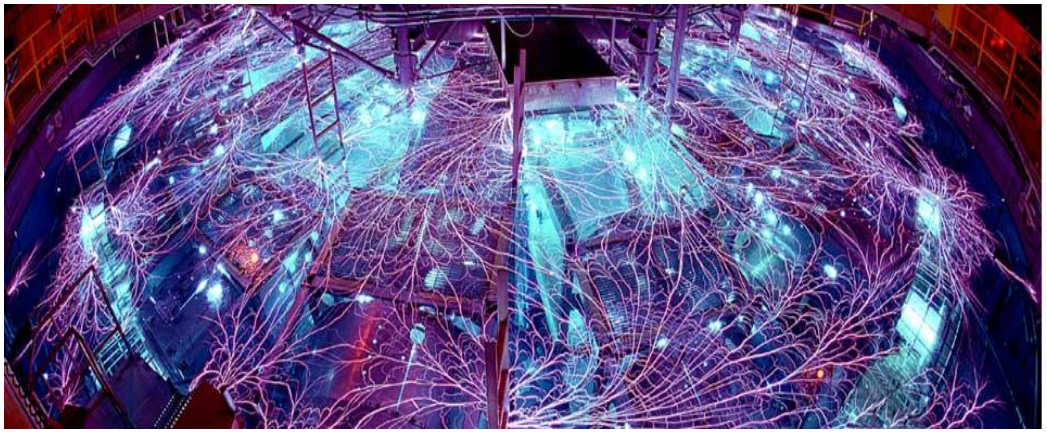

Redesign of a High Voltage Test Bed for Marxes on Z

W.M. White, M.E. Savage, M. McCarthy, S. Divett, S.W. Roundy, D. Spencer, A. Lombrozo, R. Speas, A. Jojola, R. Kamm, J. Mignon, S. Porter, W.Z. Salas, S. Radovich, J. Georgeson, L. Cortez, S. Ploor, D. Johnson, S. Wood; *Sandia National Laboratories*

J. Rathbun; *Imagineering*

Tuesday, 5 June, 2018, 3:30 pm

High Voltage Design Session, 7O1 – 7O2, *invited talk*

U.S. DEPARTMENT OF ENERGY

NNSA National Nuclear Security Administration

Sandia National Laboratories is a multimission laboratory managed and operated by National Technology and Engineering Solutions of Sandia, LLC, a wholly owned subsidiary of Honeywell International, Inc., for the U.S. Department of Energy's National Nuclear Security Administration under contract DE-NA0003525.

Outline

- Sandia National Laboratories' Z Machine
- Marx/Marx Test Bed Overview
- Test Bed Modifications
- Review of Electrical Interference
- Protection of Electronics on Z/Marx Test Bed
- In-Tank Modifications
- Test Bed Marx Trigger Generator (MTG) Modifications
- Future Capabilities

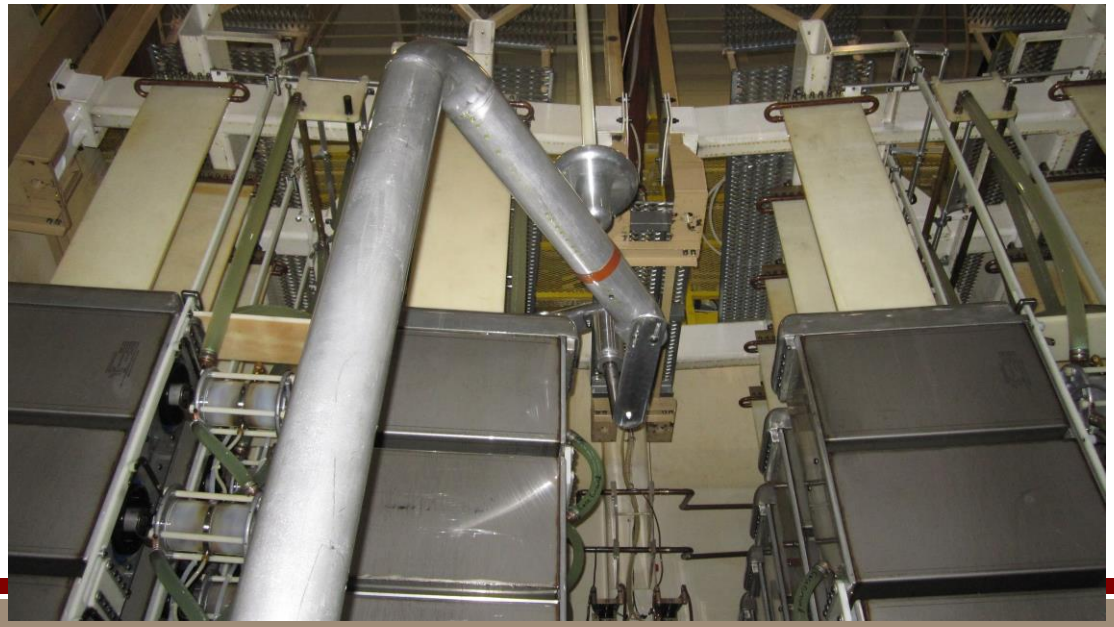

Sandia National Laboratories
Z Machine

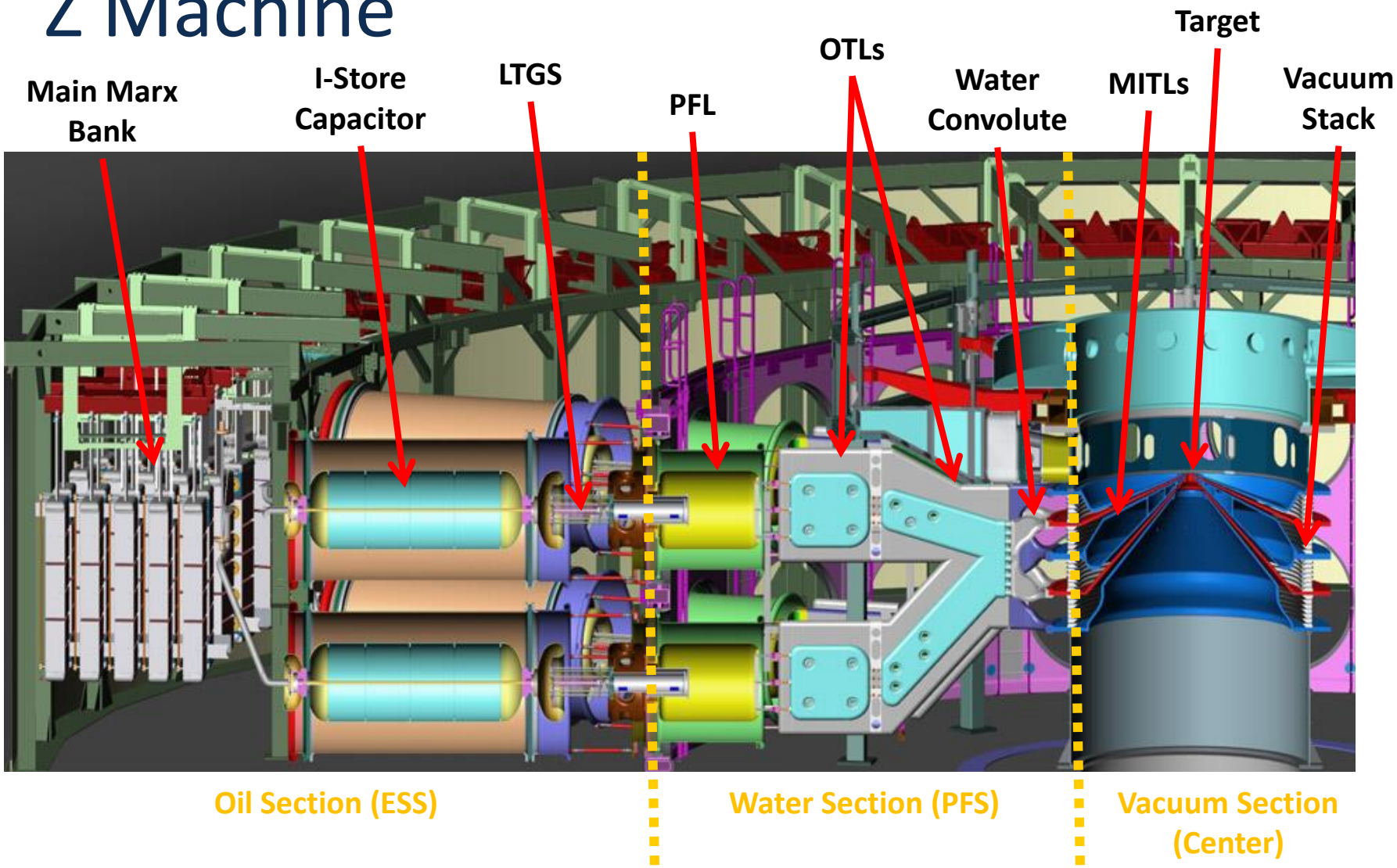

Z Marx Bank Description

- 36 Marxes
- Sixty, 2.6 µF capacitors
- ~±55 to ±95 kV charge voltage
- 10% to 90% risetime is ~850 ns
  - ~1.5 µs to peak
- 6.1 MV peak voltage; 20.3 MJ stored energy
  - (at 85 kV charge)

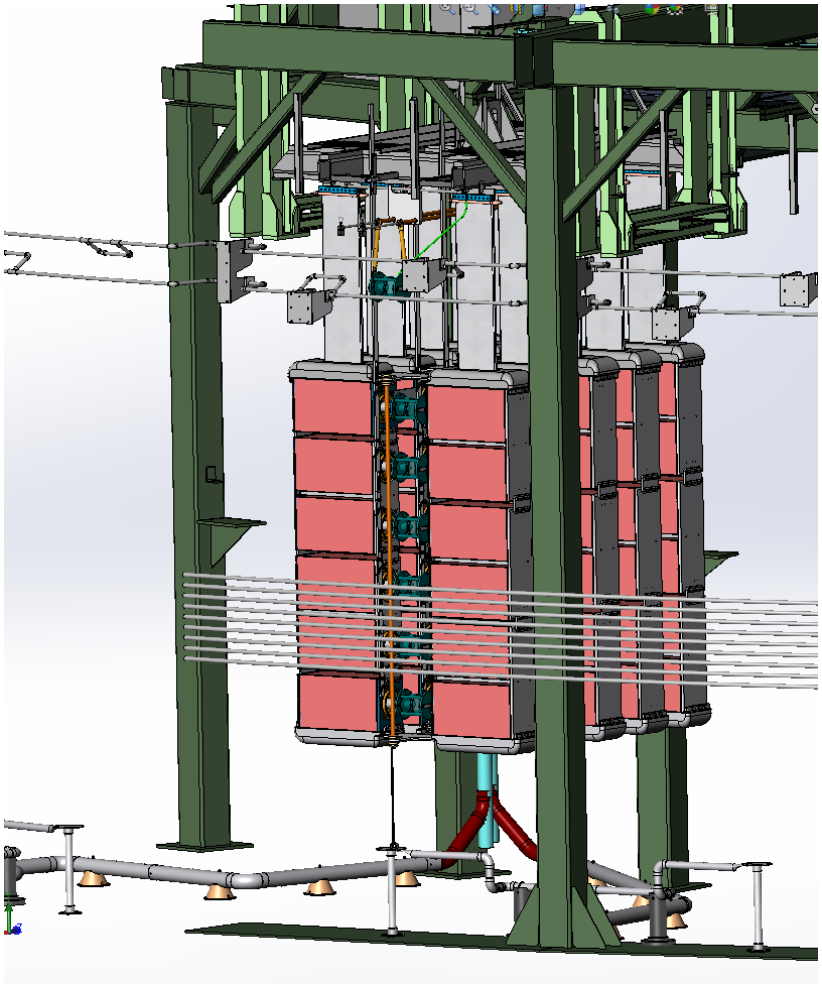

Marx Test Bed Overview

- Physically separate oil tank from main Z
  - Used to verify operation of newly-assembled Marxes
- The HVDC supply system dates back to Feb 1983
  - SCR controlled, constant-current power supply
  - Dual polarity, up to 110 kV each
- Storage capacity for two Marxes
- Erected Marxes are discharged into a resistive load

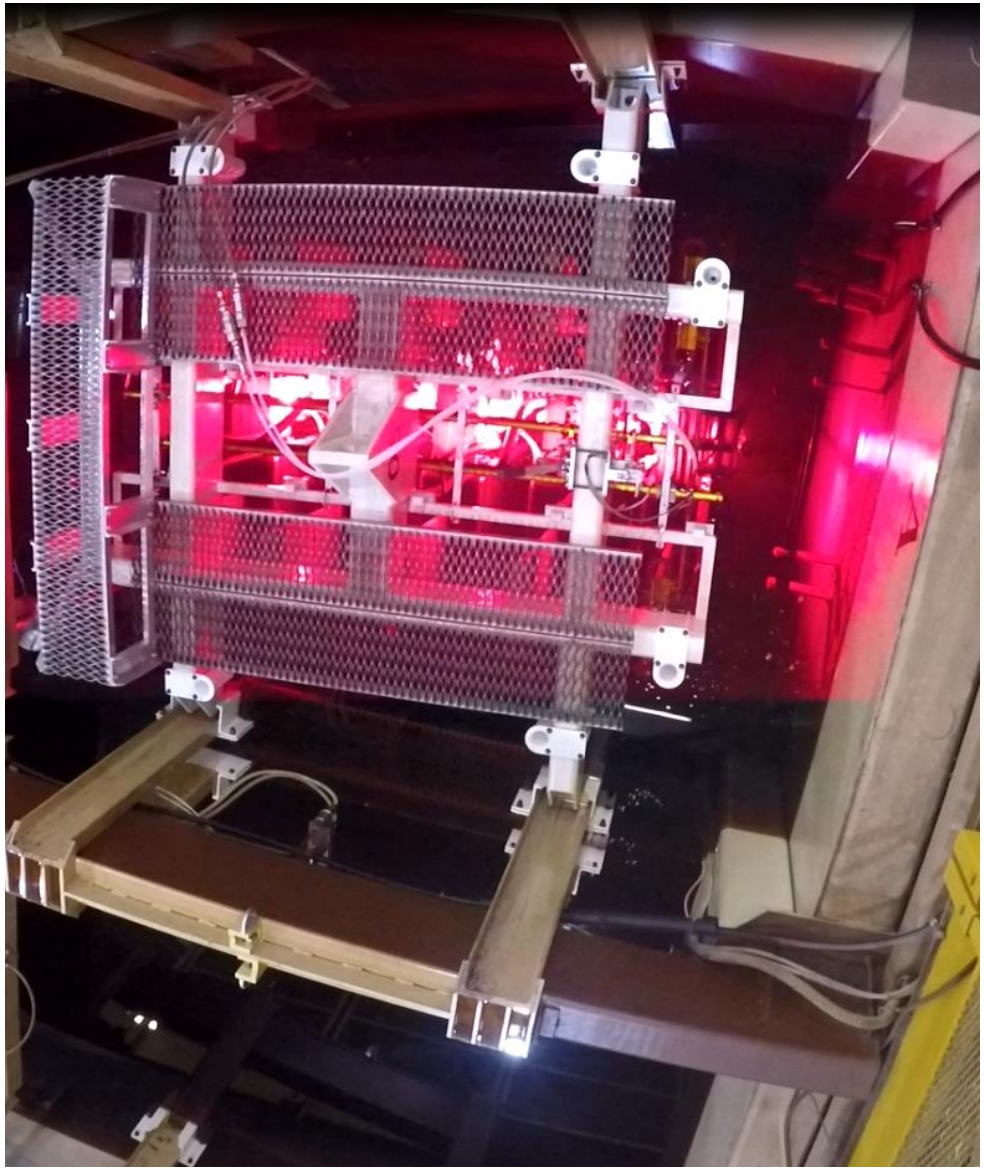

Test Bed Modifications Required

- Introduction of a new diagnostic on Z required additional space
- Opportunity used to upgrade the charging and control system for the test bed
  1) New high voltage power supplies
  2) Improved trigger generator
  3) New control system
     1) Allows remote control and diagnostics
     2) Automated testing sequences
  4) New gas-handling manifold system
  5) Replacement of obsolete MTG spark gaps
  6) Improved accessibility for maintenance
  7) Improved grounding relays
  8) Testing of new Marx current monitor

Example of a Test Bed Fault

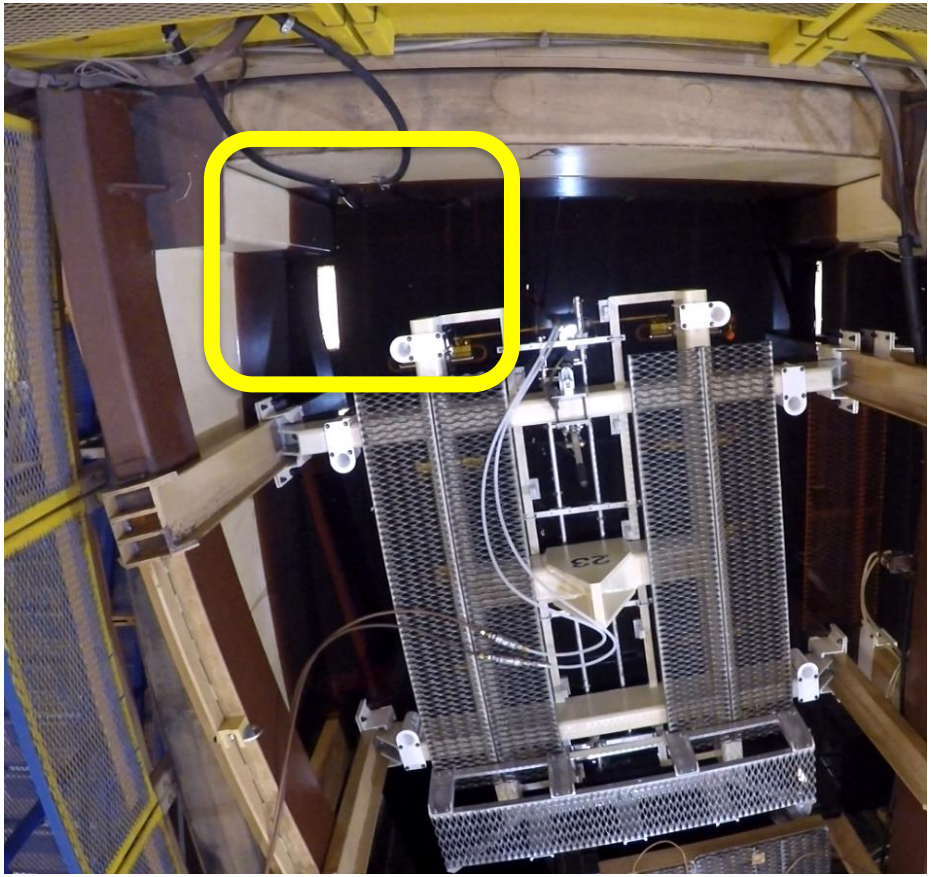

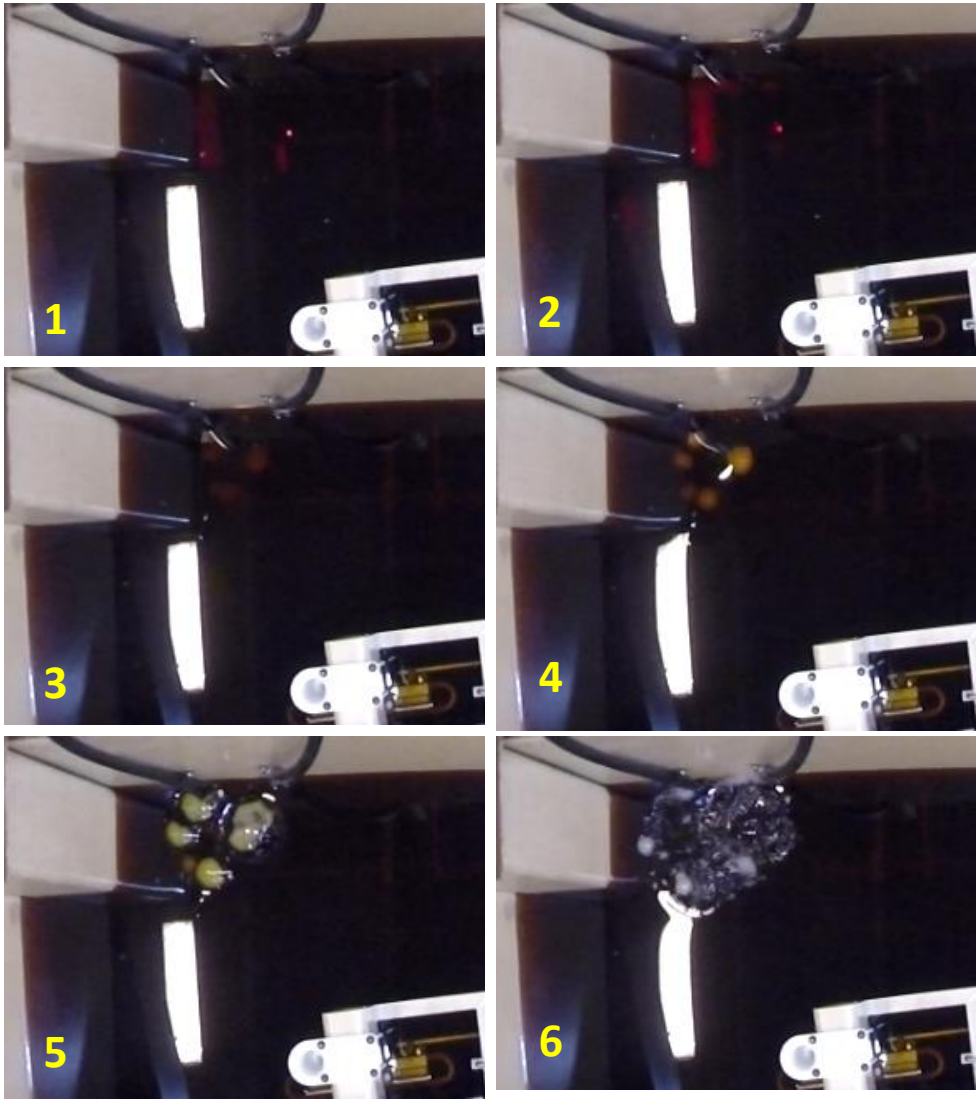

High Voltage Power Supplies

- Existing Test Bed HVU can produce 100 mA charging current up to ±110 kV to charge a single Marx
- Existing power supplies inside the tank charged the MTG to ±50 kV
  - Location makes them difficult to trouble-shoot in case of failure
- Purchased four Glassman HVPSs
  - One for each polarity, for the Marx and MTG
  - Marx supplies provide ±125 kV; 30 mA
  - MTG supplies provide ±60 kV; 10 mA
- The reduced charging current is closer to Z charging rate of 42 mA per Marx (1.5 A for the entire machine)

Review of Electrical Interference

- Z Marxes, Switches generate a lot of Electrical Noise
- There are only 4 mechanisms to couple noise from one system to another :
  - Direct conduction
  - Mutual Inductance (dominated by magnetic fields)
  - Mutual Capacitance (dominated by electric fields)
  - Electromagnetic Waves
- Near Field regions are dominated by Electric/Magnetic Fields
- Far Field regions are dominated by Electromagnetic Waves
- We can look at the specifics of Z waveforms to determine what we need to be concerned with

(A great reference for this topic is the short course: *Grounding and Shielding of Electronic Systems*, taught by Prof. T. Van Doren, Missouri University of Science & Technology)

Electrical Interference on Z Machine

- Z Machine Output Waveform (typical numbers)

  Voltage ~ 6 MV

  Current ~25 MA

  τ_{rise} ~ 100 ns
- The ratio of Voltage to Current is < 1 (Impedance ≈ ¼ Ω)
  - This implies that Magnetic Fields dominate Electric Fields
- The risetime of the Z load current is used to determine the frequency content of the energy
  - 3-dB cutoff for the waveform is given by:

$$f_{Max} = \frac{0.35}{\tau_{rise}} = \frac{0.35}{100\ ns} = 3.5\ MHz$$

- For EM waves up to 3.5 MHz, the *minimum* wavelength is:

$$\lambda = {}^{c}/_{f_{Max}} \geq 85\ meters!$$

- Therefore everywhere in the highbay is in the near field

Electrical Interference in Marx Test Bed

- This very basic analysis indicates that noise on Z is dominated by Magnetic Fields (not RF or E-fields)
- This is true for the entire Z Machine, but we are more concerned here with a single Marx in the Test Bed:

  Voltage ~ 6 MV

  Current ~ 160 kA

  τ_{rise} ~ 850 ns

  Impedance ~ 40 Ω

  Bandwidth ~ 411 kHz (wavelength $\lambda \geq 720$ meters)
- Noise in the Test Bed should be more dominated by E-fields…
  - **Don't Forget Direct Coupling of Interference!**
- How to shield the control system/HVPSs from this interference?

Protection for Test Bed Electronics

- Since EM waves are not a concern, a shielded screen box is NOT required for the power supplies
  - As confirmation of this, we already have 'unshielded' power supplies operating in the Z highbay during experiments
- Therefore we are primarily concerned with noise:
  - Being induced on the power lines coming into the HVPSs
  - Being directly coupled back from the MTG/Marx into the HVPSs
  - Being induced onto control wires/monitor wires
- How do we shield each of these?
  - Surge protectors and power line filters for the AC input power
  - HV diodes and filter networks to protect the HPVSs at their DC output
  - Careful use of twisted, shielded pair (TSP) wire for control and monitor signals

(My thanks to Steve DeClario, Chief Engineer at Glassman for his help and suggestions about protecting their power supplies)

Protection for Test Bed Electronics

- We have prior experience doing TSP wiring badly…

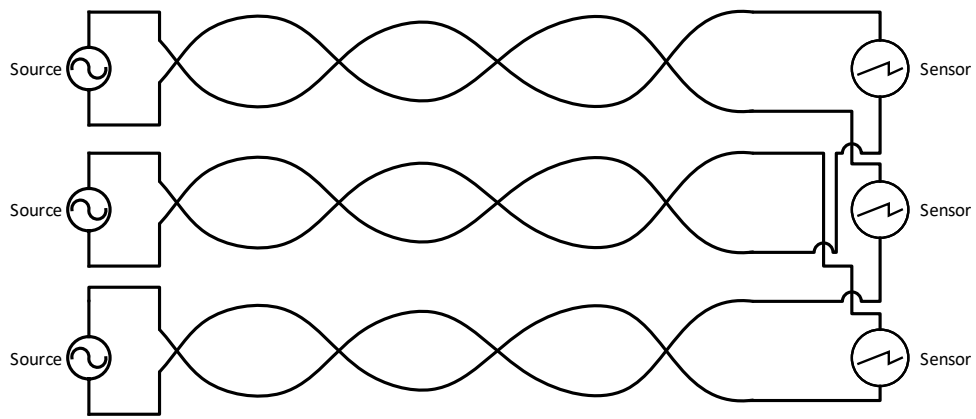

- The effective 'area' enclosed by each signal path can be large
- This area can easily induce large voltages on the conductors from stray time-varying magnetic fields

- MUST have the signal and return on the same pair in the bundle

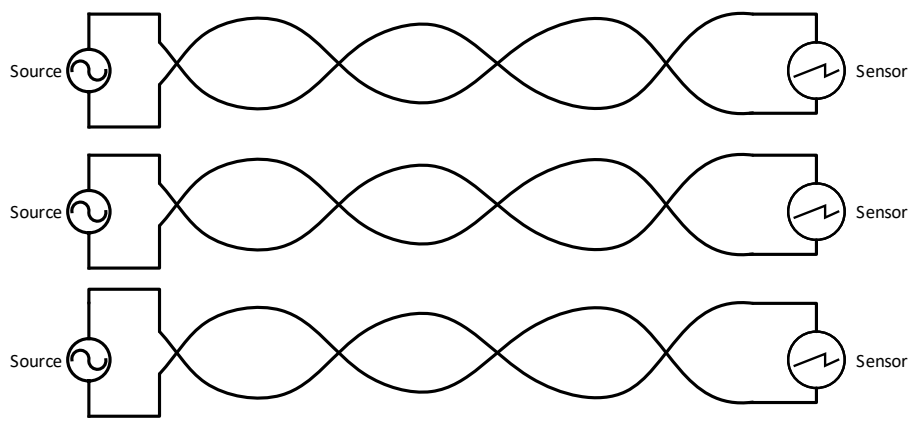

- The effective 'area' enclosed by each signal path is minimized
- Susceptibility to nearby Magnetic fields is minimized
- Shields around the cabling prevent E-field coupling

Protection for HVPSs

- Glassman recommends protecting their power supplies from transients on the Marx/MTG charge buss
- We do this through a combination of:
  - Series HV diodes to protect the HVPS from over-voltage conditions on forward surges
  - Parallel HV diodes to limit the current on reverse surges
  - RC filters to limit microsecond transients to levels that the diodes can handle when the Marx erects
  - Self-break spark gaps limit charge bus voltage excursion when the Marx erects
- These protective measures have been used for many years in the Test Bed and on the Z Machine itself

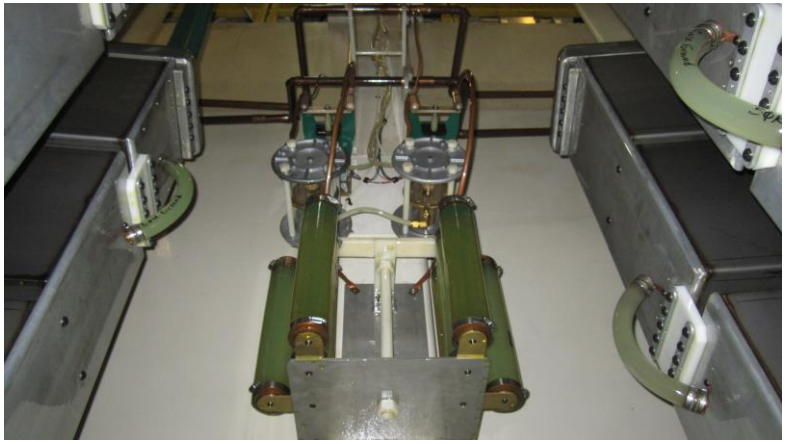

In-Tank Modifications

- Several of the high voltage components are mounted high above the tank floor
  - Requires access from an oil-covered, 6 ft ladder
  - Inspection, trouble-shooting, and repair are all complicated by this
- Where possible, components will be mounted lower, and more ergonomically
  - High voltage relays
  - Dump resistors
  - Filter resistors
- The main charge buss connections will remain in place

Marx Test Bed Circuit Diagram

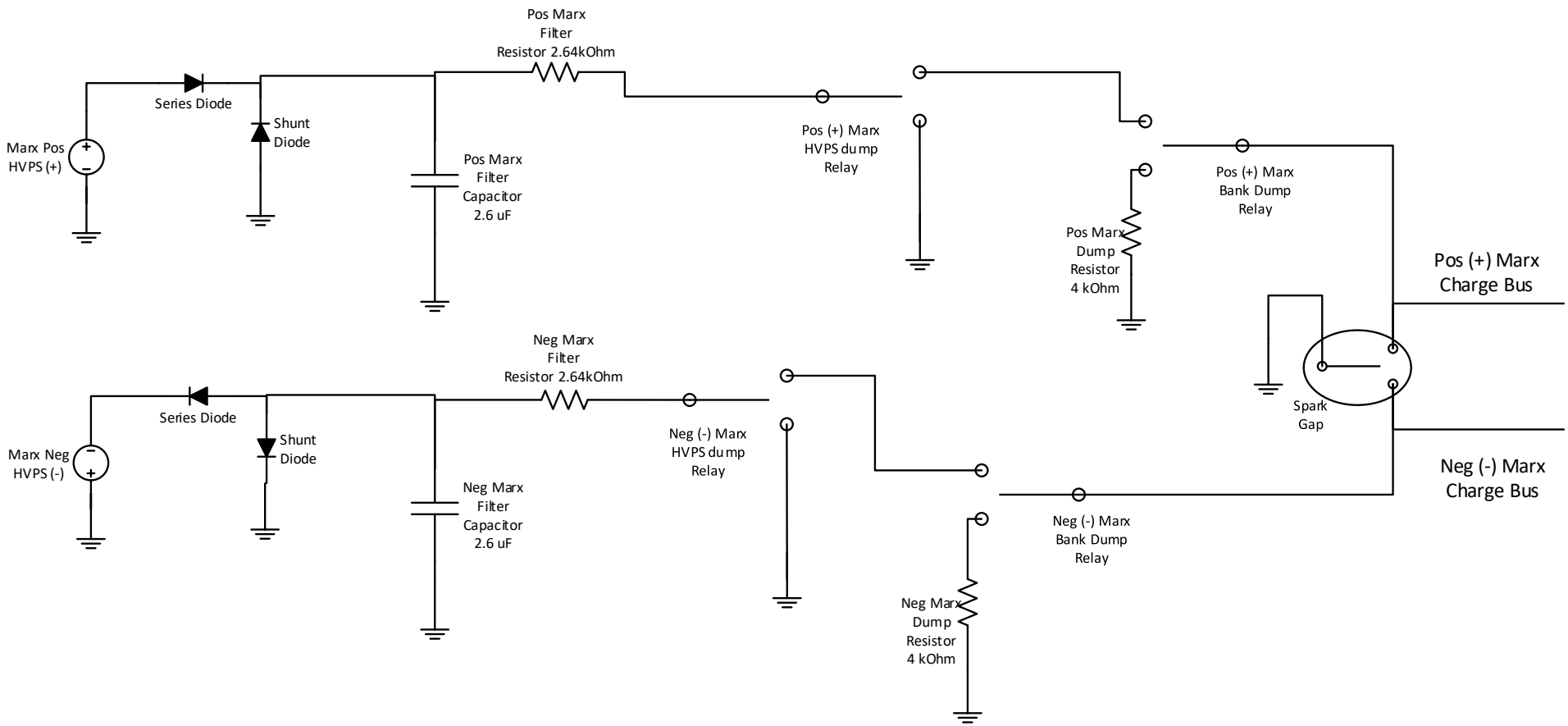

Series combinations of relays are used to ensure personnel safety – both the Marx (or MTG) can be shorted through dump resistors to ground; as well as the power supply system.

Test Bed MTG Modifications

- Spark gaps used on Marxes and MTGs are Sandia-modified versions of L-3 Communications T-670 switches
- Those used in the MTGs are obsolete, need to transition to 50264 models
  - Need to verify operation of the new spark gap designs before transitioning main Z tank!
- We prefer to operate well away from self-break
  - Use a high-voltage trigger to gain reliable triggering/breakdown of the spark gap…
  - We are upgrading the primary trigger generator in the Test Bed as well

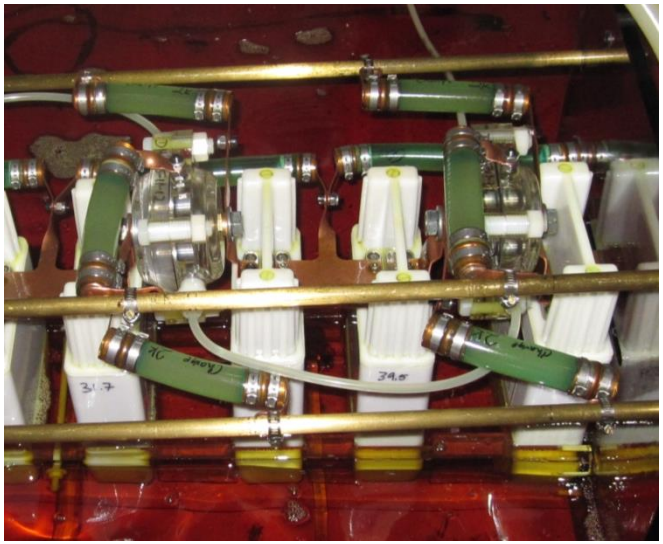

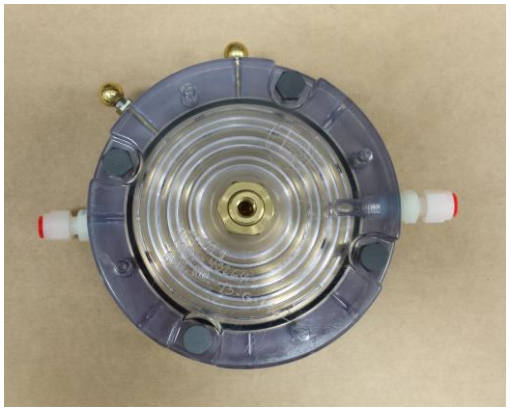

Control System

- CompactRIO-based, LabVIEW-coded control system
- Remote control of:
  - Gas handling
  - Charging
  - Triggering
  - Data Acquisition
  - Interlocks/Safety Features integrated
- New operational modes are available:
  - Can operate while under high-voltage lockup in the highbay
  - Remove human error during testing

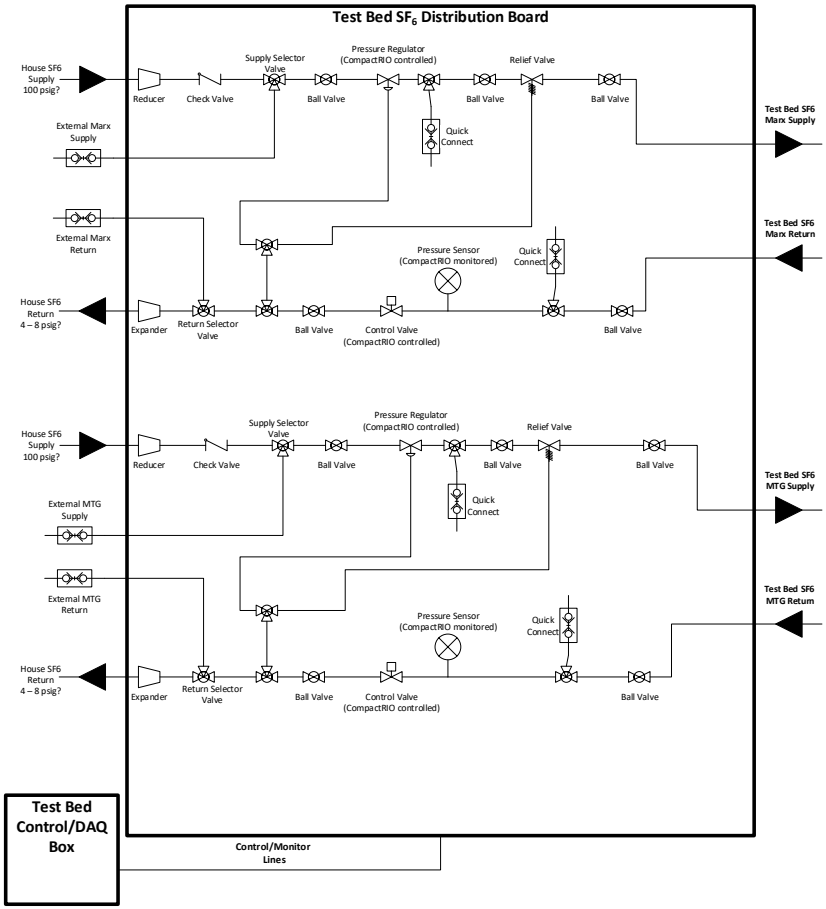

(Potential) Future Capabilities

- Add a Swingarm for the Dummy Load
  - Enable testing of Marxes in Either ‘A’ or ‘B’ slots
  - Operationally saves time in some circumstances
- Automated analysis of Waveforms
- Z MTG Testing Capability
  - More Generic HV testing Capability
- Imaging of Marx in Test Bed during HV Operations
- Testing of other gases in Spark Gaps
  - SF_6 is our workhorse:

  Expensive

  Environmentally unfriendly

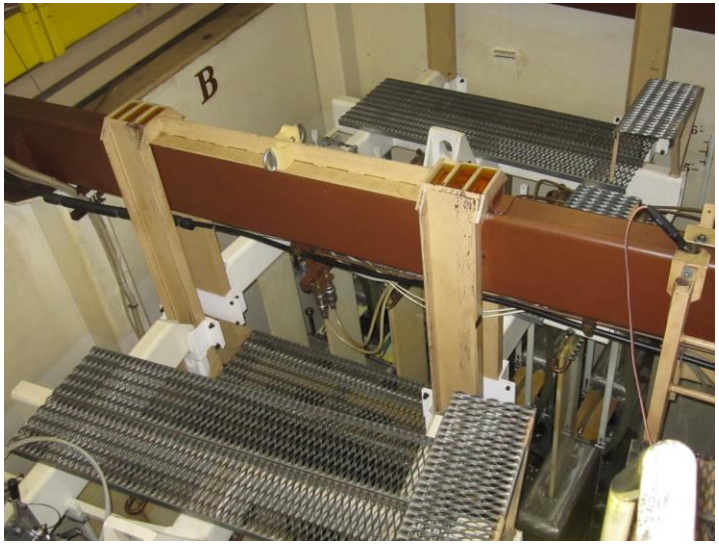

Questions?