Texas Tech University
Center for Pulsed Power and Power Electronics

Modeling Power Factor Correction Circuits with LTspice

Michael G Giesselmann and Vishwajit Roy
Texas Tech University
Center for Pulsed Power and Power Electronics

2018 IEEE IPMHV Conference, Oral Session

Center for Pulsed Power and Power Electronics
Texas Tech University - Lubbock, TX

Abstract

LTspice is a powerful simulation language that is specifically optimized for modeling Switch Mode Power conversion. It is not limited to small numbers of nodes and freely available [1]. We are presenting several examples of simulations for popular electronic power factor correction circuits that improve the input power factor of AC Power Supplies by active wave-shaping of the AC input current and the associated avoidance of harmonics. The simulations are performed using a cycle-by cycle switching approach as well as using a time averaged PWM model. A fast inner current loop is controlling the shape of the input current such that it matches the sinusoidal shape of the AC input voltage. A time averaged PWM model is useful for fast simulations covering many cycles to design and study secondary feedback control that regulates the output voltage of the converter.

Keywords—Boost converter; Power Factor Correction; Time Averaged models; Feedback control; LTspice

AC rectifier without Power Factor Correction

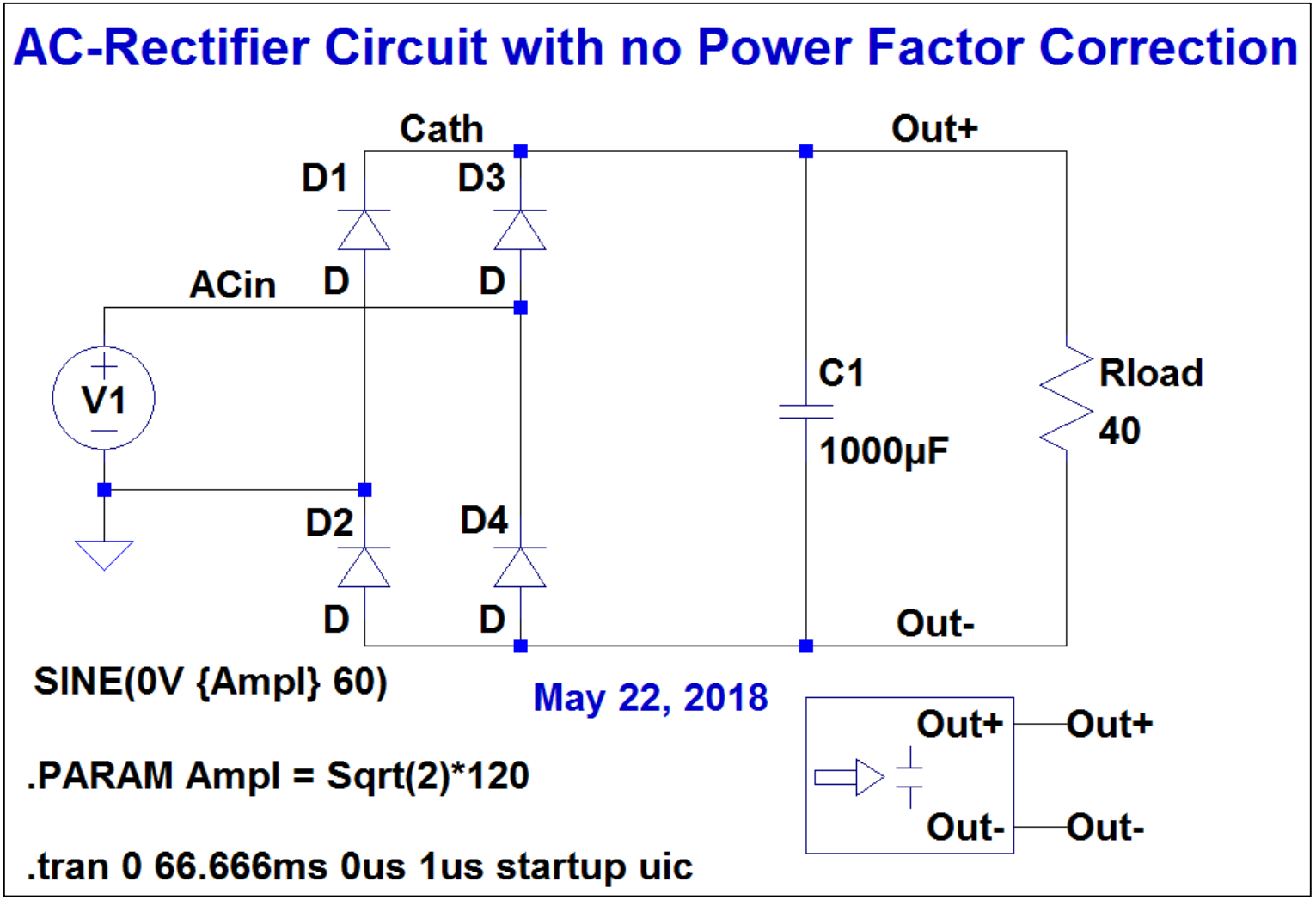

Waveforms & Spectrum of AC rectifier with no PF Correction

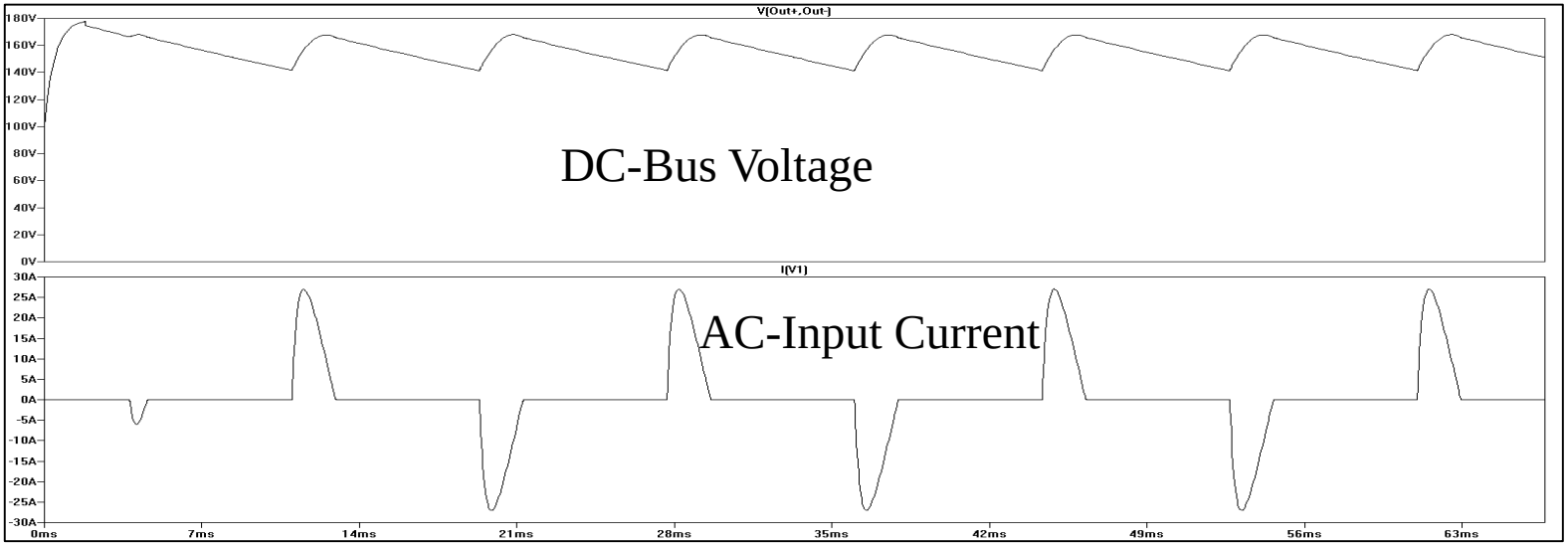

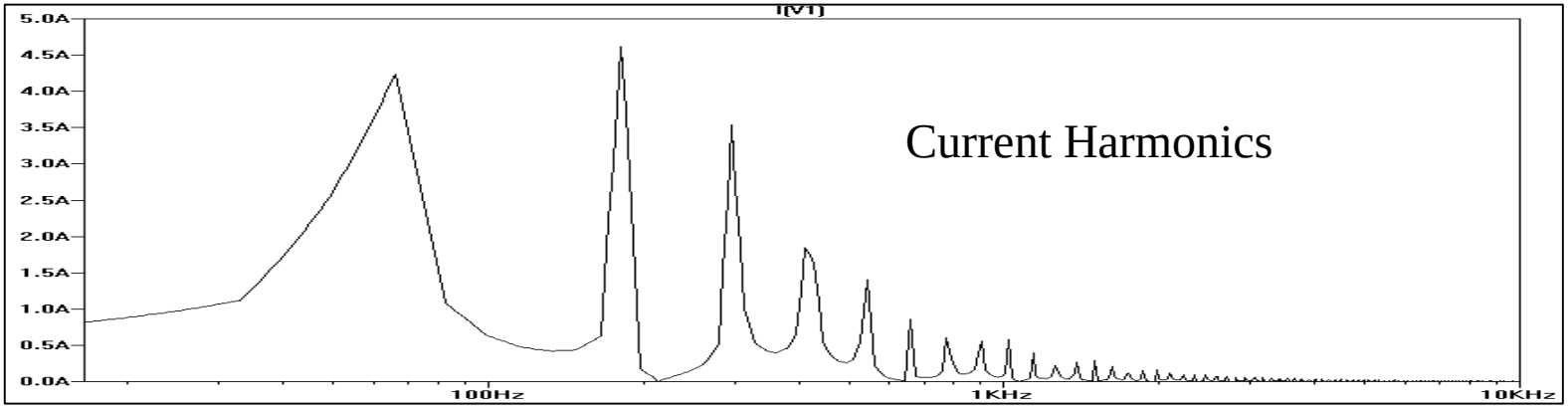

Center for Pulsed Power and Power Electronics
Texas Tech University - Lubbock, TX

Center for Pulsed Power and Power Electronics
Texas Tech University - Lubbock, TX

AC-Rectifier with Boost Converter for Power Factor Correction

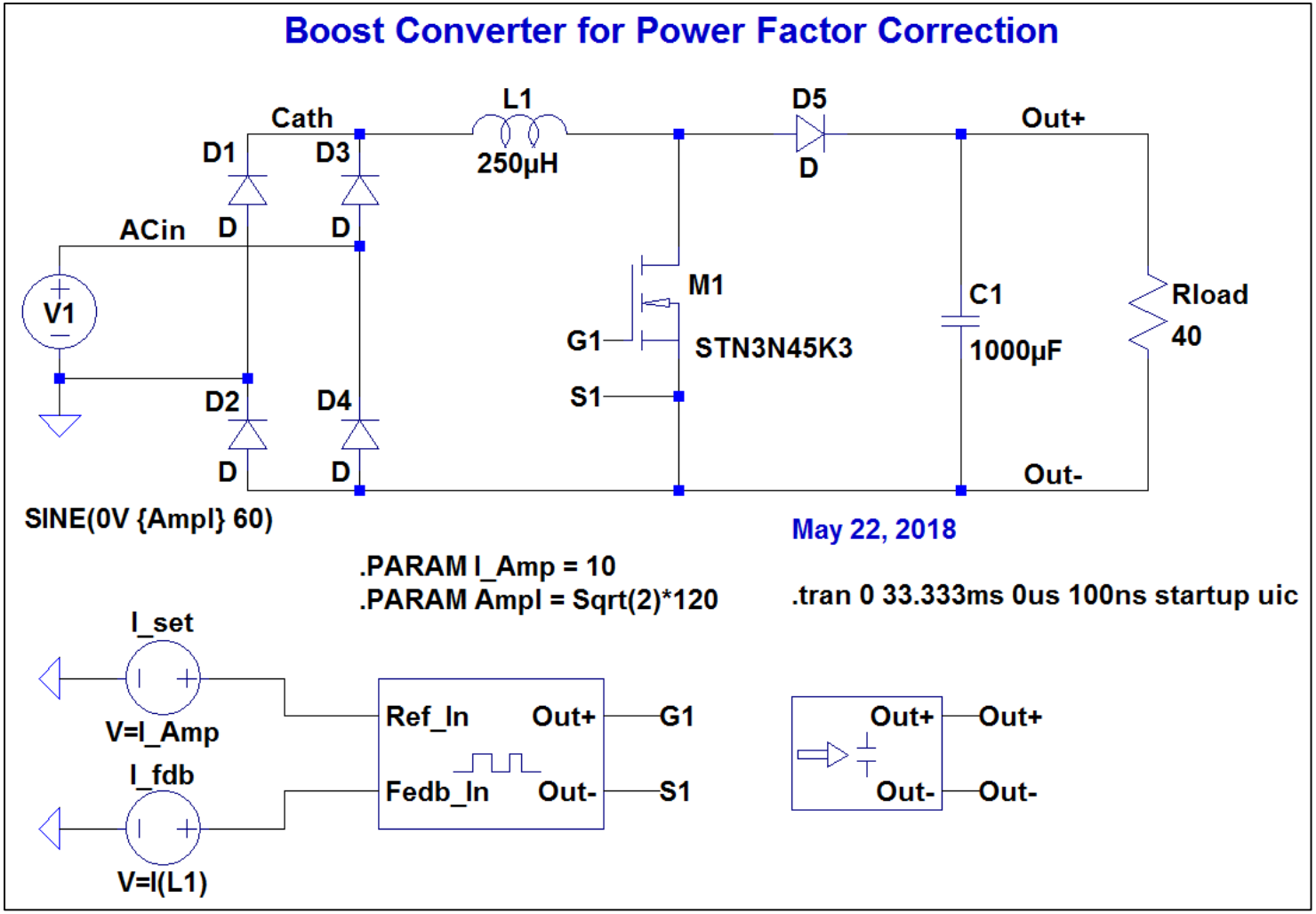

Pre-Charge & PWM Controller Sub-circuits

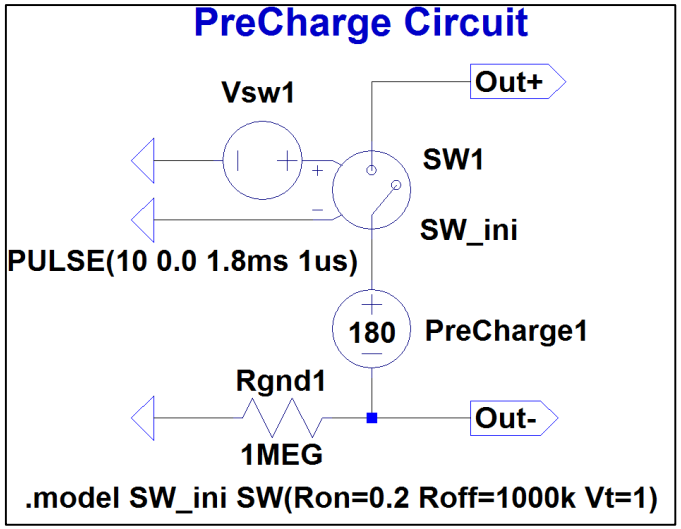

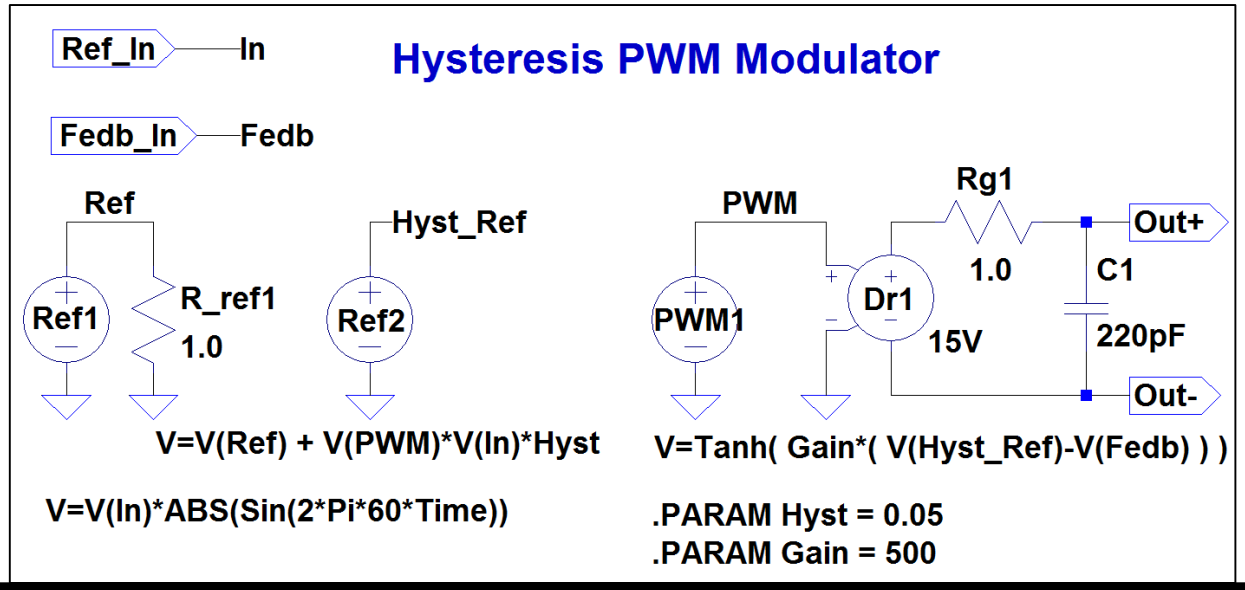

Center for Pulsed Power and Power Electronics
Texas Tech University - Lubbock, TX

Waveforms of AC rectifier with PF Correction

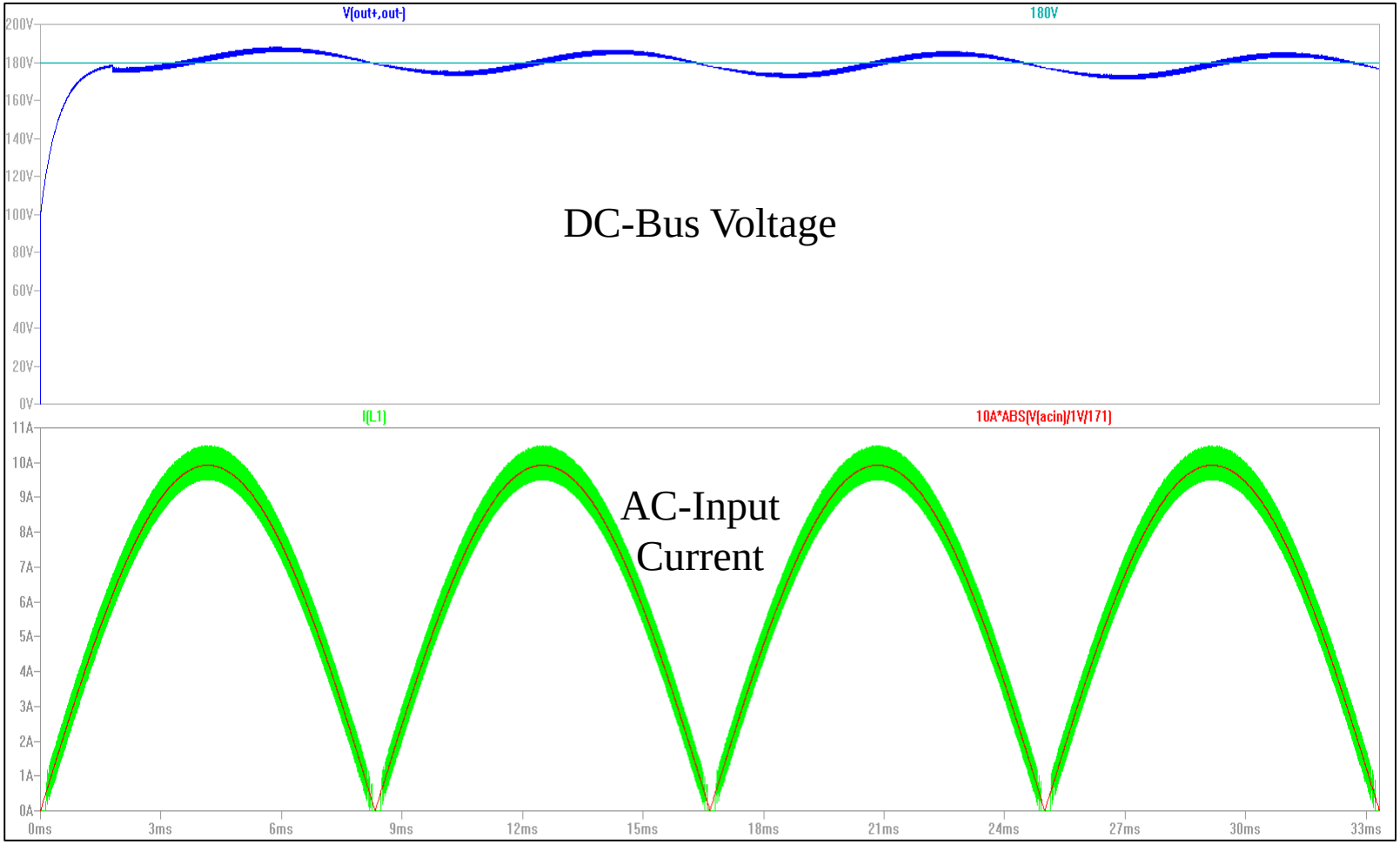

Center for Pulsed Power and Power Electronics
Texas Tech University - Lubbock, TX

Spectrum of AC rectifier with PF Correction

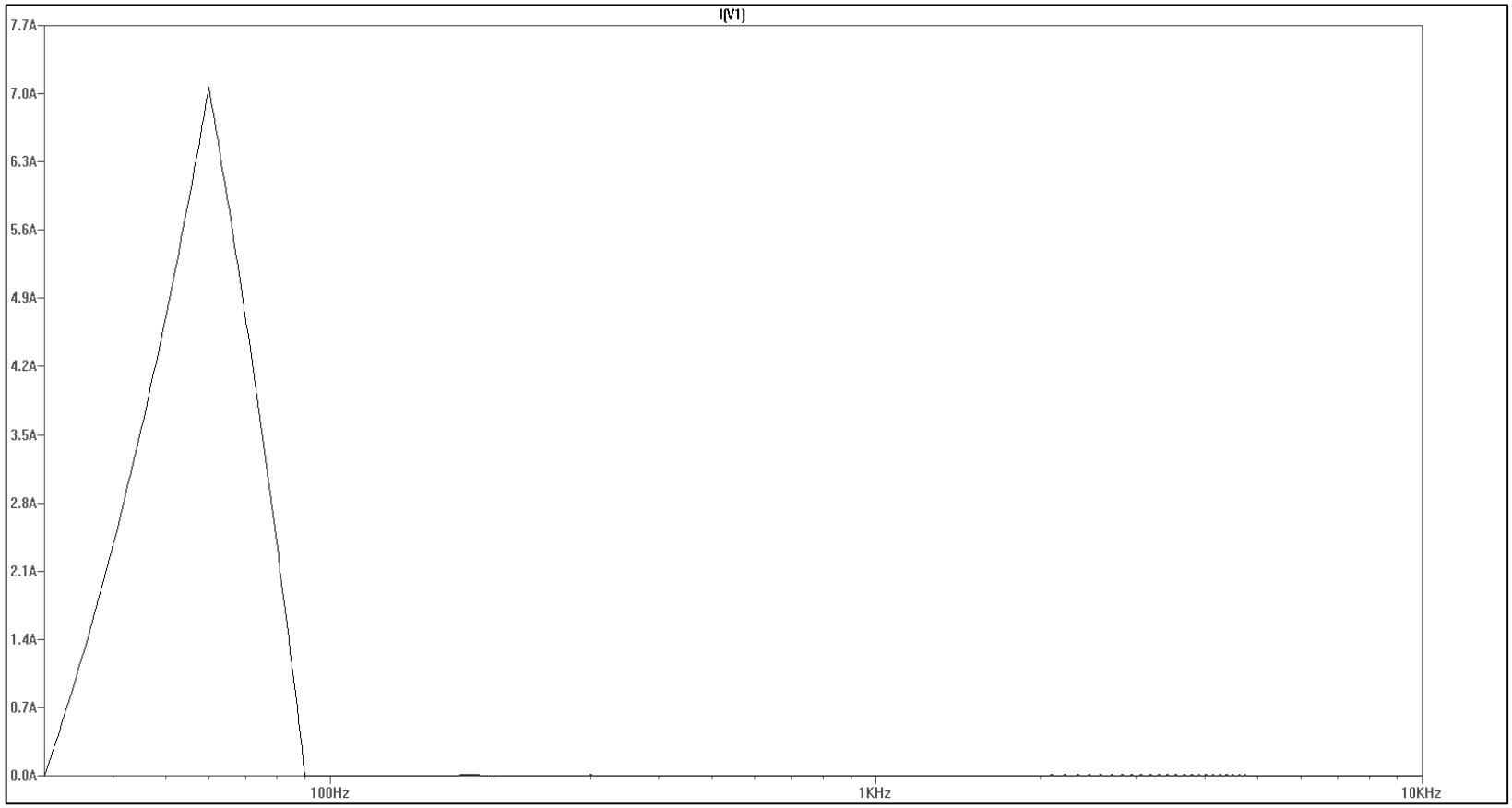

Center for Pulsed Power and Power Electronics
Texas Tech University - Lubbock, TX

Center for Pulsed Power and Power Electronics
Texas Tech University - Lubbock, TX

Switch-Mode & Time Averaged Models

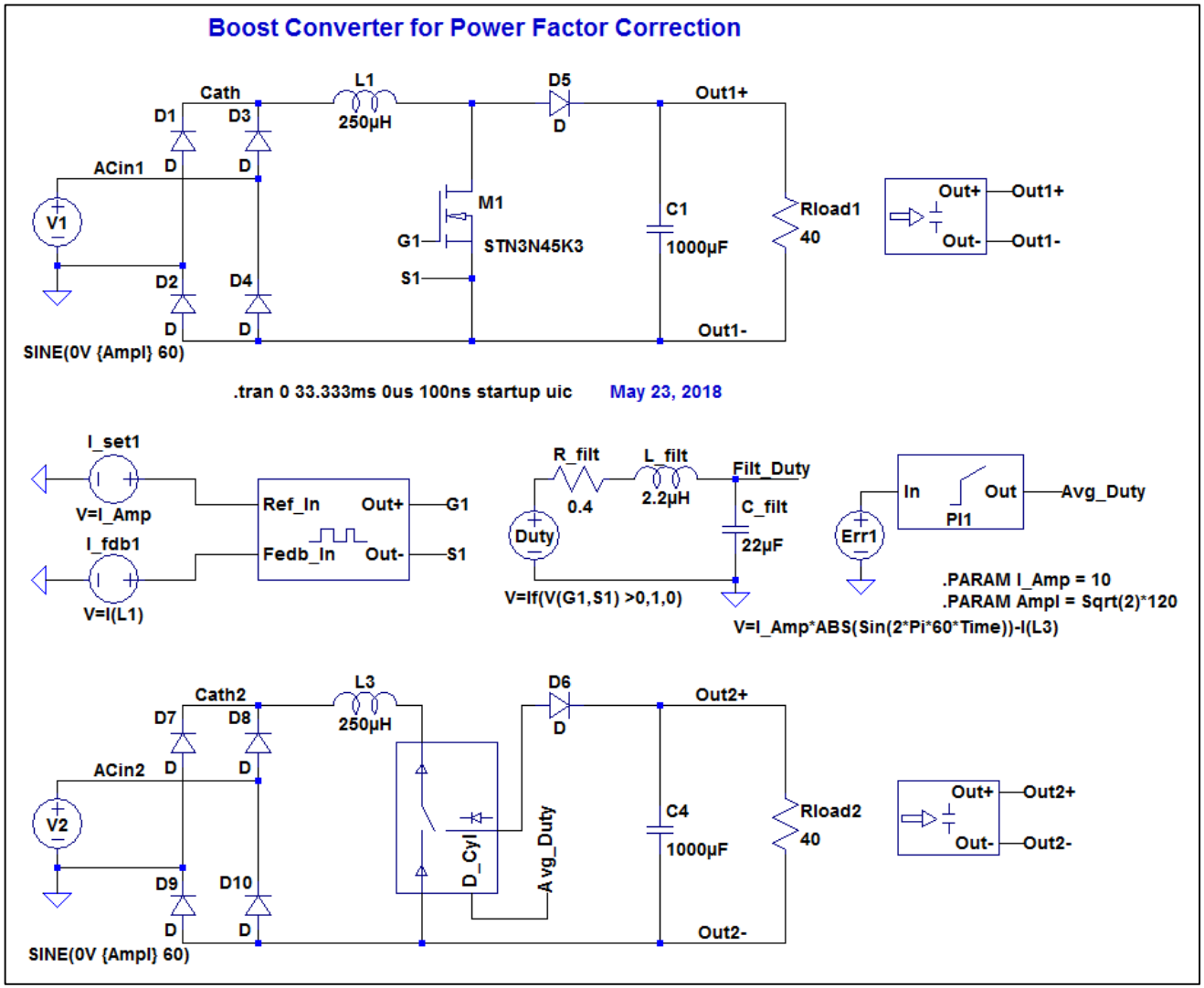

Time Averaged PWM Sub-circuit

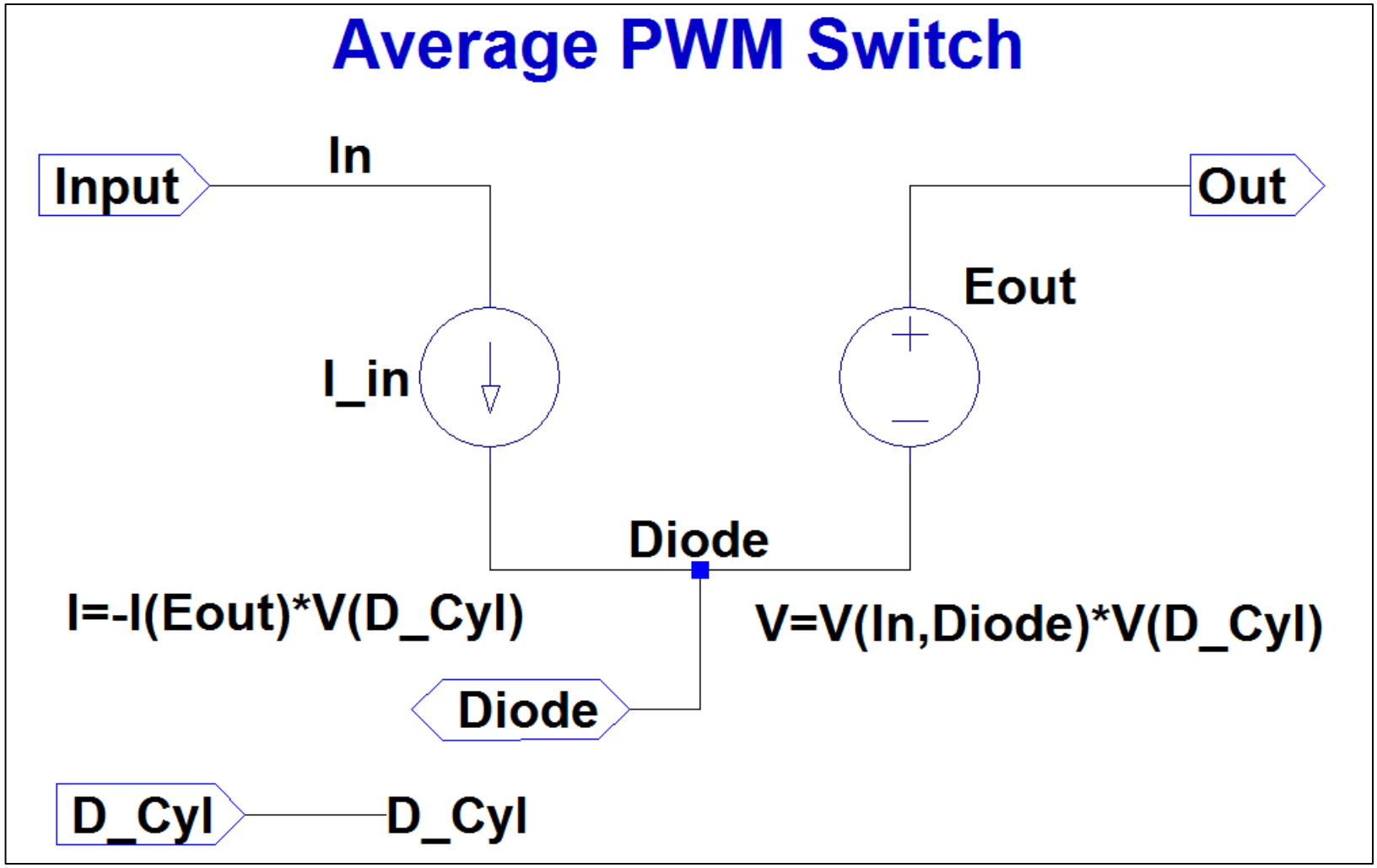

Center for Pulsed Power and Power Electronics
Texas Tech University - Lubbock, TX

Waveforms of AC rectifier with PF Correction

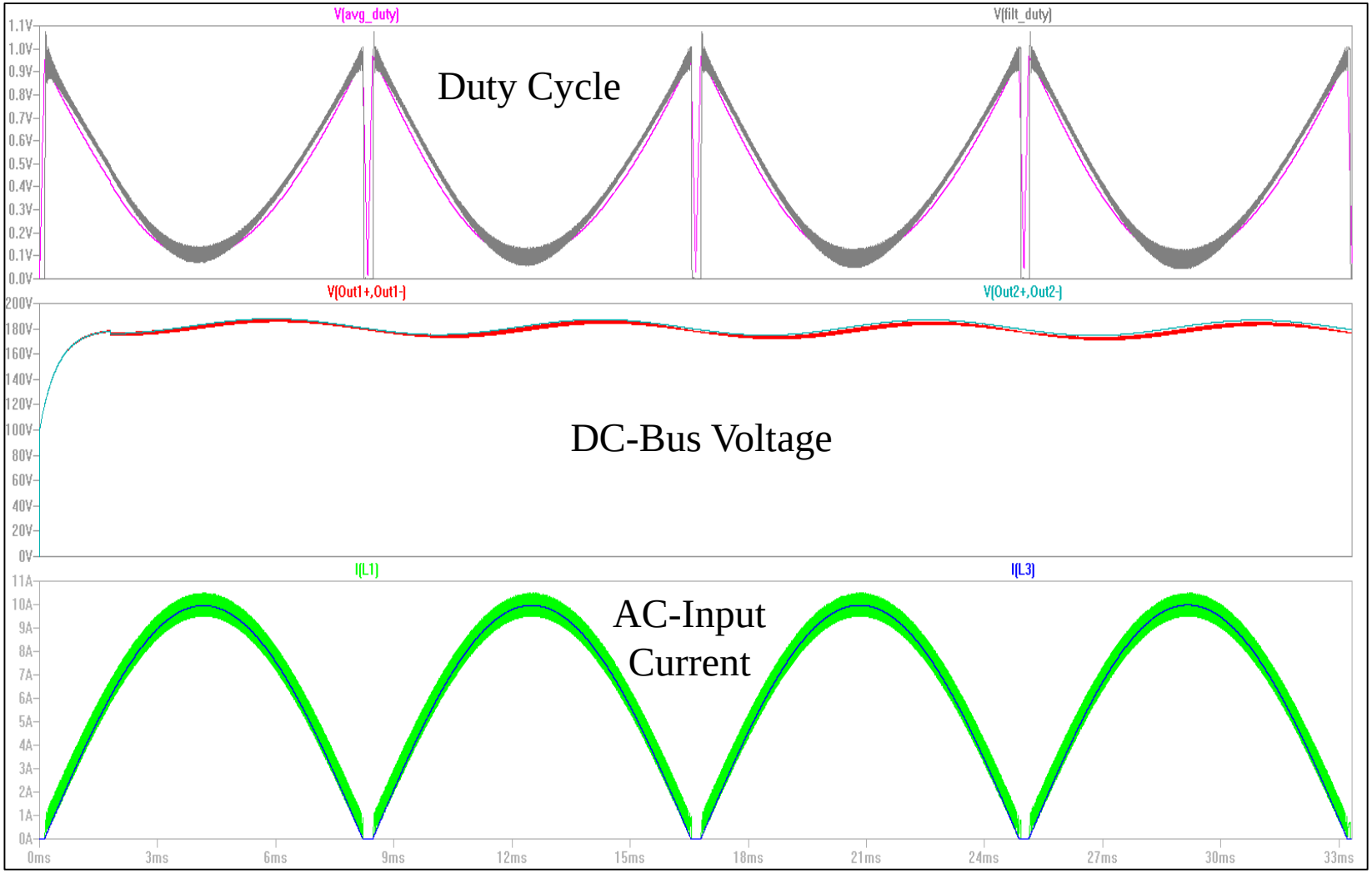

Center for Pulsed Power and Power Electronics
Texas Tech University - Lubbock, TX

Conclusions

In this paper we have shown simulations of Boost converters used to draw a nearly sinusoidal input current from a AC source and thus avoiding harmonics. This will result in a power factor which is close to unity. We compared a conventional model that uses a cycle-by-cycle switching approach with a model using a time-averaged switch. We found that the results of both models agree very closely. Since there are no high frequency switching transitions that need to be followed, the model with the time-averaged switch can run orders of magnitude faster in a stand-alone simulation. This model can also be used in a frequency domain simulation with the duty cycle input being an analog control variable. The basic model of the time averaged switch shown in Fig. 10 is further expanded by Ned Mohan as a basic pole of a power electronics converter suitable for a wide variety of applications.

Center for Pulsed Power and Power Electronics
Texas Tech University - Lubbock, TX

References

1. LTspice, Analog Devices, One Technology Way, P. O. Box 9106
2. Norwood, MA 02062-9106, http://www.analog.com/en/design-center/design-tools-and-calculators/ltspice-simulator.html
3. IEEE Standard 519, IEEE Recommended Practice and Requirements for Harmonic Control in Electric Power Systems, 2014 edition, https://ieeexplore.ieee.org/document/6826459/
4. Ned Mohan, Tore M. Undeland, William P. Robbins, Power Electronics, Converters, Applications, and Design, © 1989, John Wiley & Sons, Inc.
5. Josef L. Smolenski, Gerard W. Christopher, John C. Wright, and Alfred E. Relation, "AC to DC Power Conversion circuit with low Harmonic Distortion", US Patent 5,019,952, May 28, 1991.
6. Muhammad H. Rashid, "Power Electronics Handbook", Chapter 41, "Computer Simulation of Power Electronics and Motor Drives" by M. Giesselmann, P. 1124, Academic Press, ISBN 13: 978-0-12-088479-7.
7. M. G. Giesselmann, "Averaged and cycle by cycle switching models for buck, boost, buck-boost and cuk converters with common average switch model", Proceedings of the 32nd Intersociety Energy Conversion Engineering Conference, IECEC-97, Honolulu, Hawaii, DOI: 10.1109/IECEC.1997.659210.
8. Ned Mohan, "Electric Drives, An interactive Approach", MNPERE, Minneapolis, 2003 edition, chapter 4.