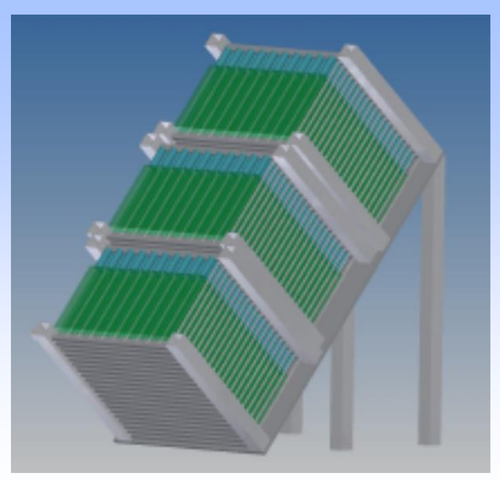

milliQan

A new experiment for milli-charged particles at the LHC

Andy Haas (co-spokesperson)
for the milliQan Collaboration

LHCP 2018 - Bologna
http://lhcp2018.bo.infn.it/

June 5, 2018

arXiv:1607.04669

NEW YORK UNIVERSITY

Introduction

Milli-charged particles (mCP) are new stable particles with much less electric charge than the electron and unknown mass.
MilliQan is a new experiment that will search for mCP produced in LHC collisions.

With charge of ~1E-3e, the deposited energy is ~1E-6 times that of a MIP.
Long scintillator bars (5x5x80 cm) are used to detect ~1 photo-electron (PE).

A 1x1x3m array of ~1200 bars will be placed ~33m from the CMS interaction point in a well-shielded tunnel (the "drainage gallery").

A mCP passes through 3 bars and leaves >1 PE in each within 10ns. This triple-coincidence is used to reduce backgrounds.

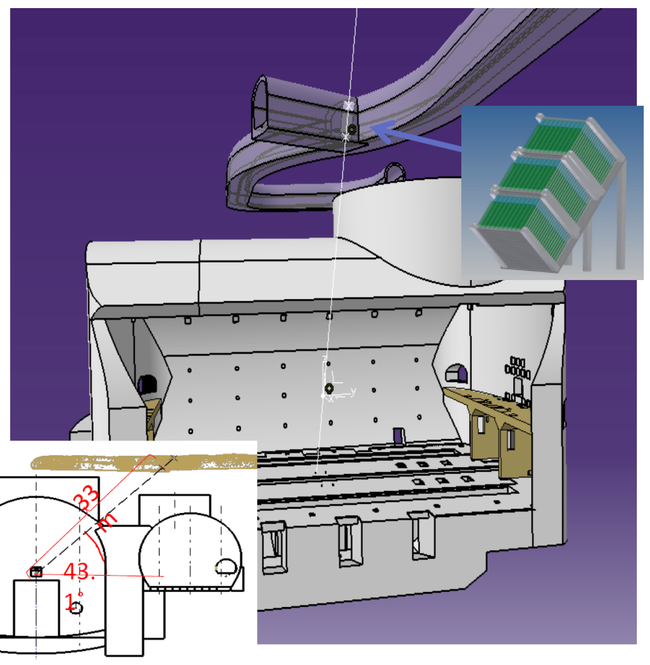

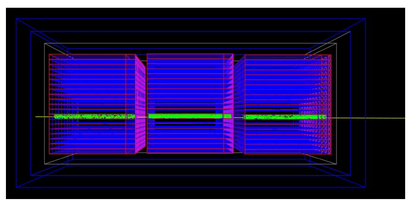

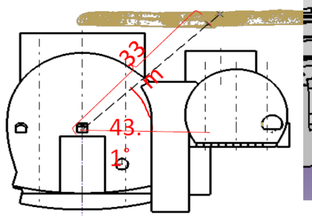

Analysis and Plans

Gaining experience with running conditions and debugging HV and readout.

Calibrating channel efficiencies, timings, and responses.

Studying triple-coincidence small-signal backgrounds in situ:
- two correlated hits + dark count
- triple dark-count
- cosmic shower

Using scintillator sheets to tag cosmic showers, and expand cosmic simulation.

Working on mechanical design for the full detector, including cabling and cooling to -20C (to reduce dark count rate).

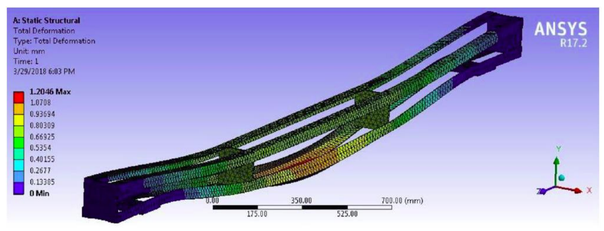

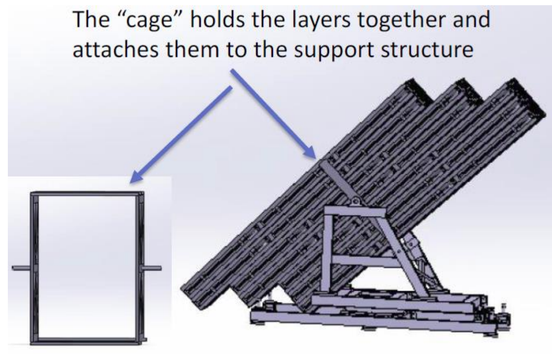

Plan to commission experiment for physics before Run3 (2020).

On track to meet this schedule if funding is secured soon (M&S ~$1M).

3rd milliQan collaboration meeting, Nov. 2017

1% Demonstrator Test

Mechanical support commissioned and aligned in 2017. Can support the weight of the final 1200 bar detector.

15-bar demonstrator (2x2+1 x3 layers) commissioned in TS2 of 2017, along with 1cm-resolution hodoscopes.

Upgraded during 2017-18 YETS with a few additional scintillator bars, slabs between layers, large sheets on outside (for cosmic veto), environmental sensors, more hodoscopes, and LHC timing card.

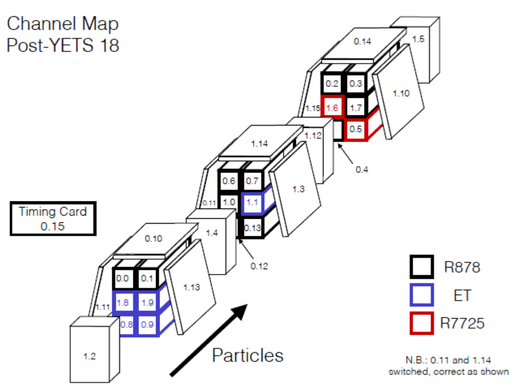

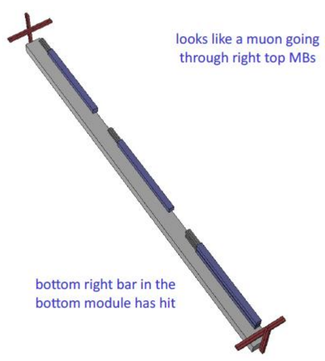

Data taken very efficiently since YETS.

Excellent correlation of muons detected from IP with CMS luminosity. Alignment to IP confirmed.

Measured muon rate 0.18 pb vs. 0.22 pb expected from simulation. Very good agreement!

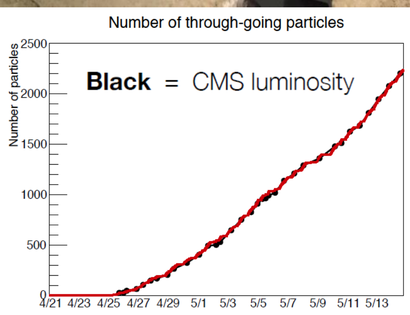

Expected Sensitivity

milliQan will greatly expand parameter space explored for mCP above 100 MeV.

Calculations and detailed simulations show that with 300 fb^{-1} sensitivity to mCP with charge $\mathcal{O}$(10-3)e can be achieved for masses $\mathcal{O}$(1) GeV, and charge $\mathcal{O}$(10-2)e for masses $\mathcal{O}$(10) GeV.

Production cross-sections are conservative, considering only direct Drell-Yan and prompt Z, Upsilon, and J/psi decays. Other hadronic production is ignored so far.

Reach improves with 3000 fb^{-1} HL-LHC, even before possible detector upgrades.