Integration and data life cycle

Y. Muttoni & all

EDMS 1775265

Main goal

- Only the CATIA/Smarteam data are involved by the datalife cycle.
- Why integration data should be follow a data lifecycle?
  - To have a correct status on the document stored in smarteam.
  - To be sure between different model with the same description only one is the valitaded model and can be use.

Integration data. Drawings & 3D Models

- Conceptual layoutDrawing *
  - Produced by Excel Engine
- Consolidated layout Drawing *
  - Produced by DMU Engine
  - Produced by hand
- Differential layout Drawing
  - Produced by hand
- 3D scene Drawing not necessary
  - Produced by hand

*Definition see EDMS 1760014

Data conceptual layout Excel engine

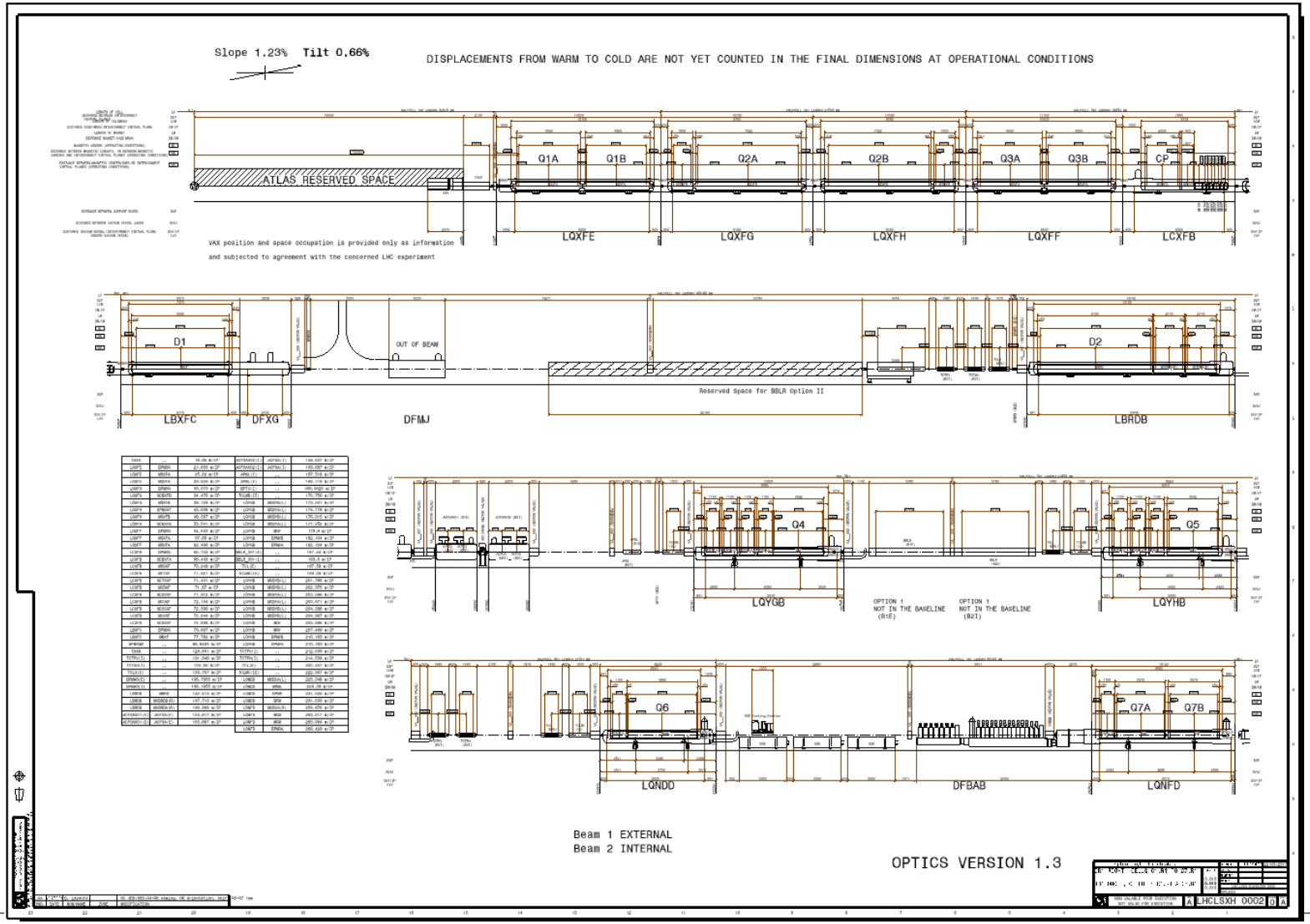

Consolidated layout Drawing

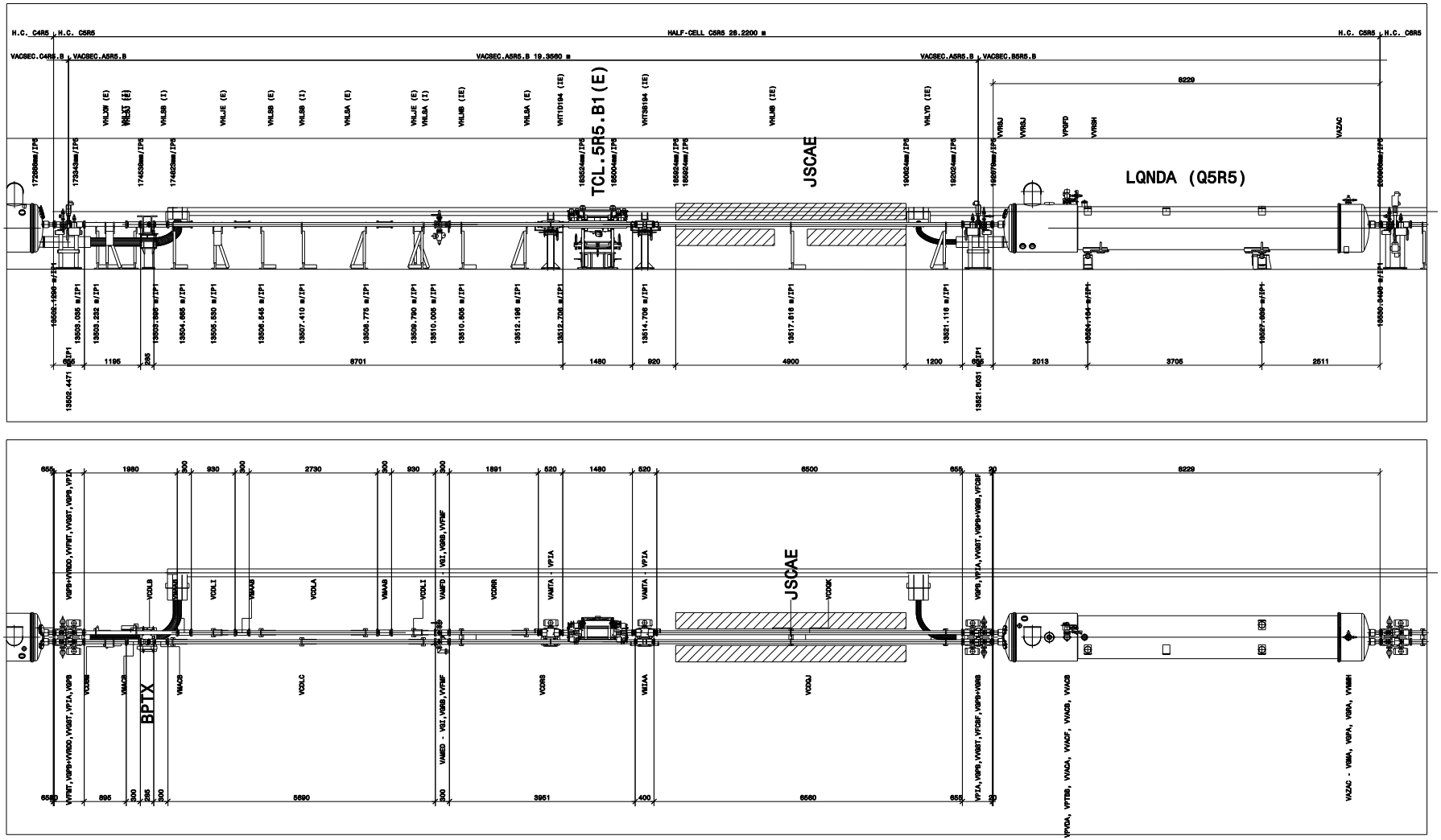

Differential layout Drawing

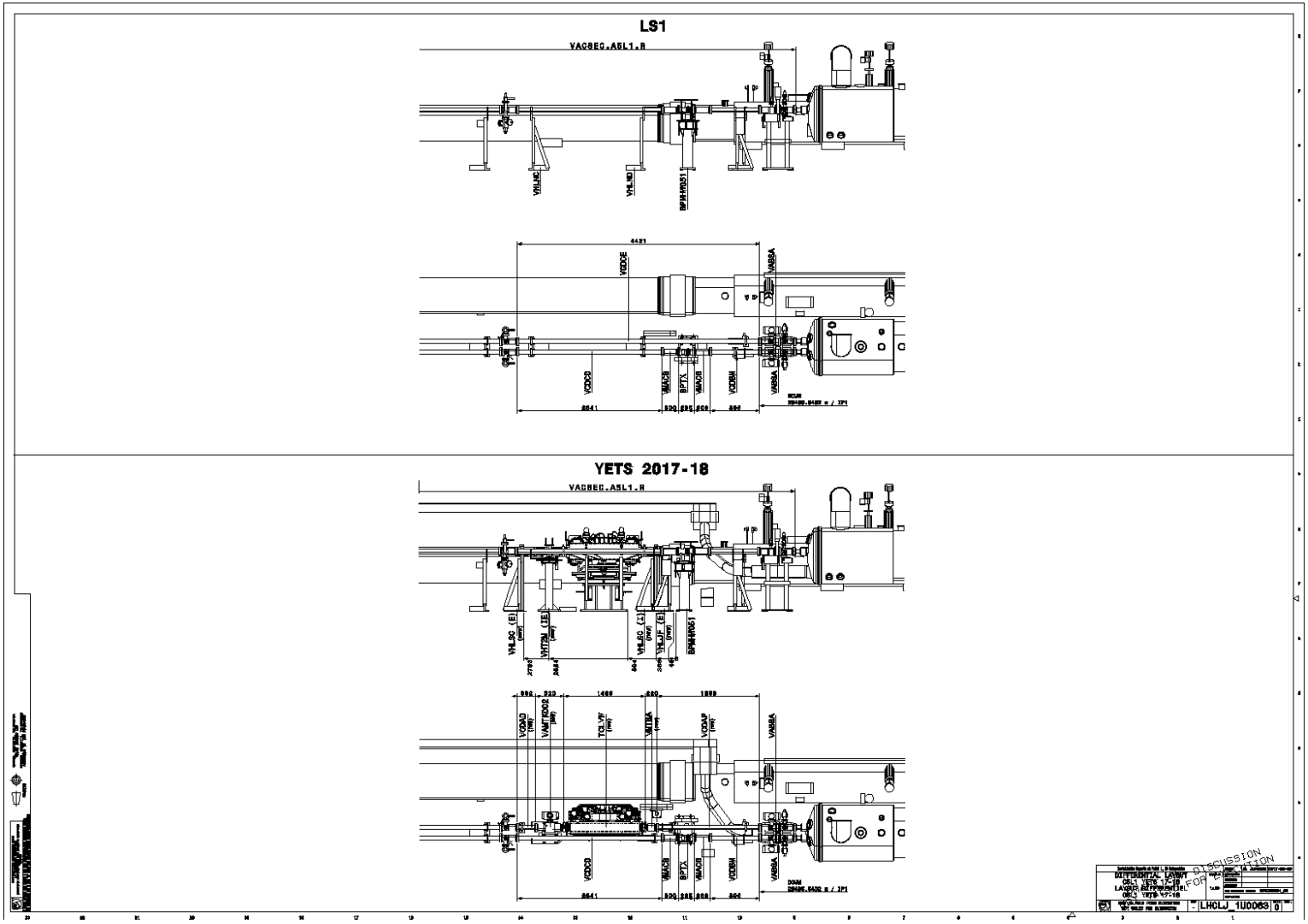

Data model equipment

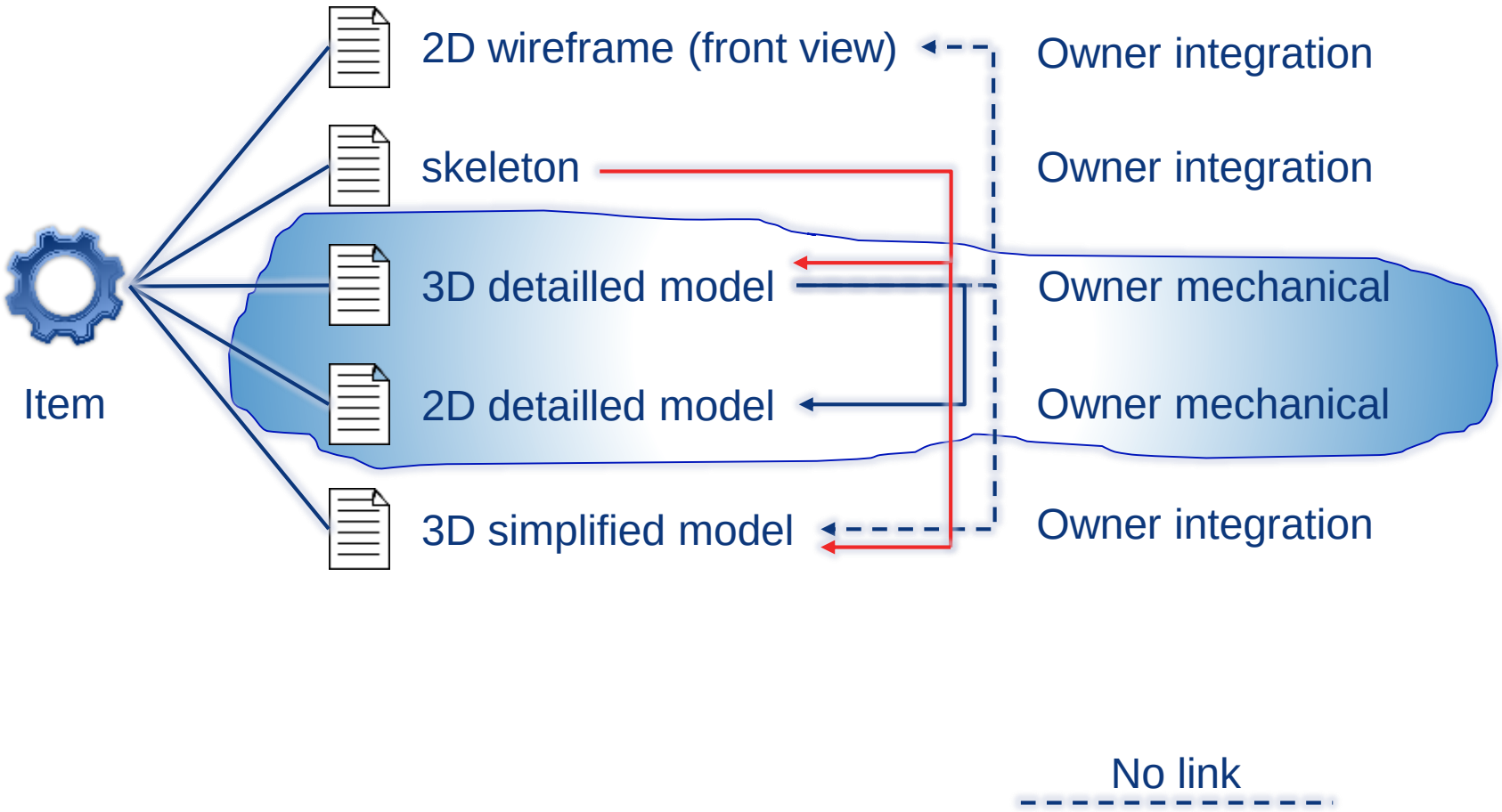

3D detailled model

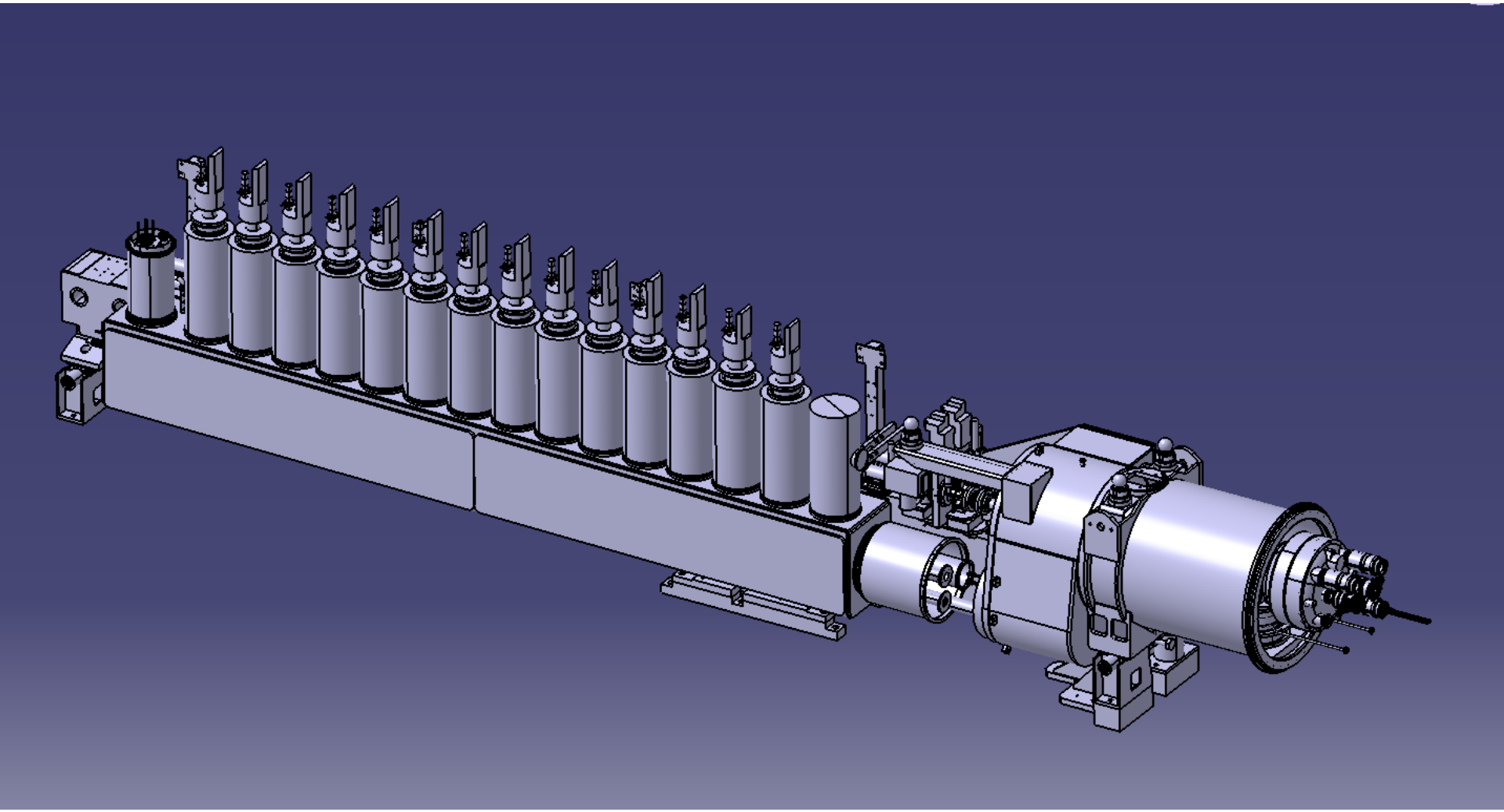

Data model equipment

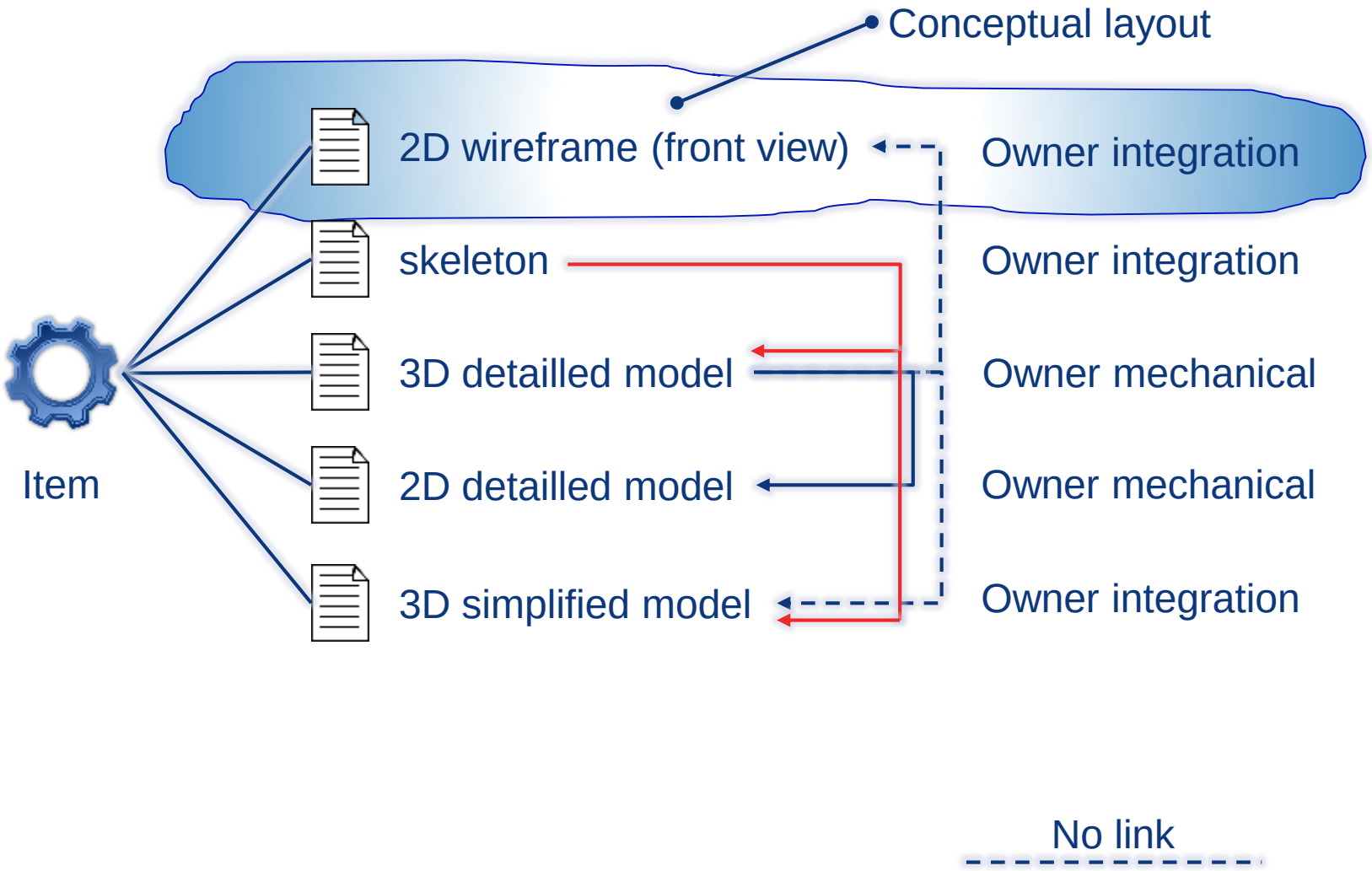

2D wireframe

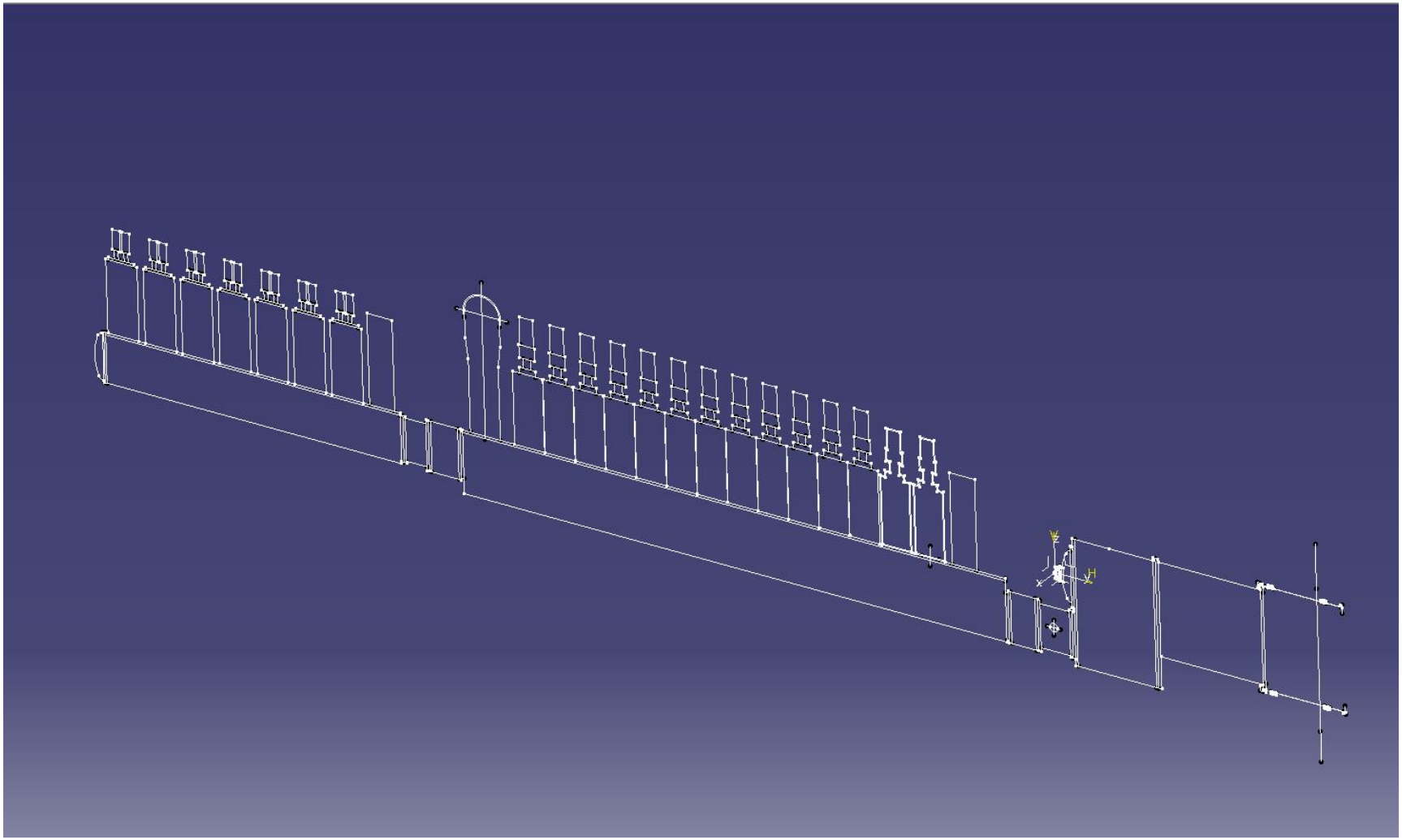

Data model equipment

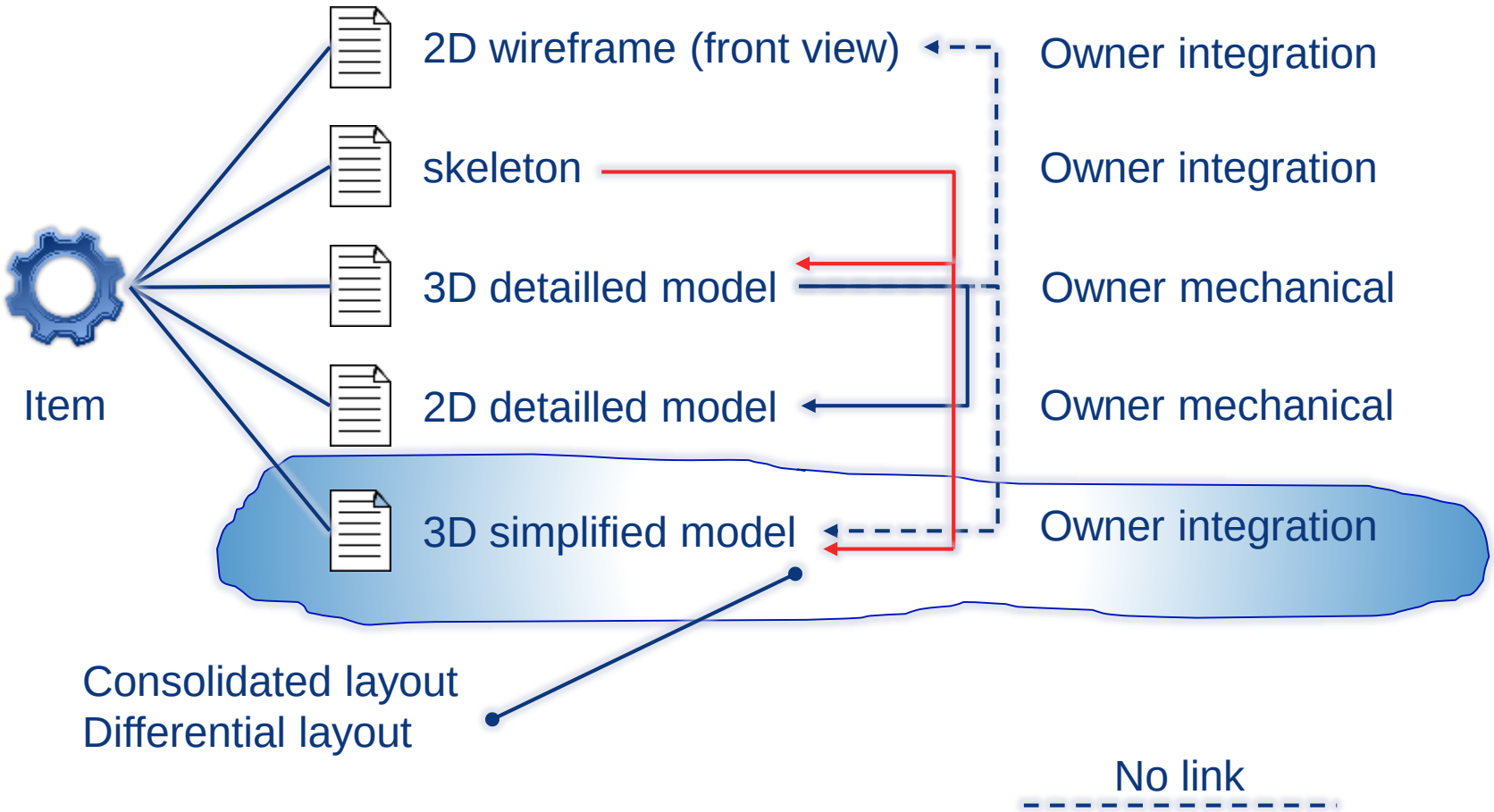

3D simplified model

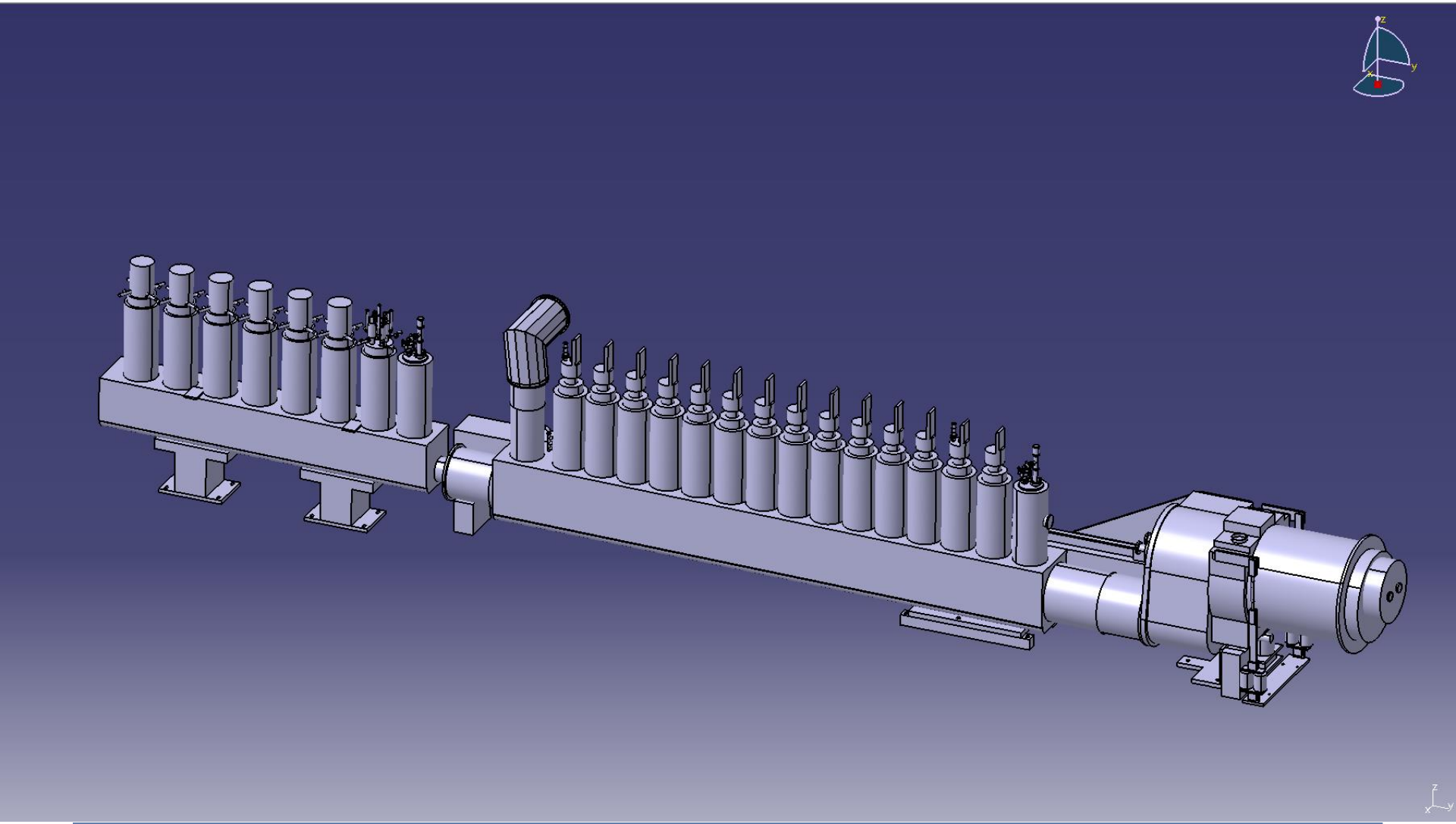

Data conceptual layout Excel engine

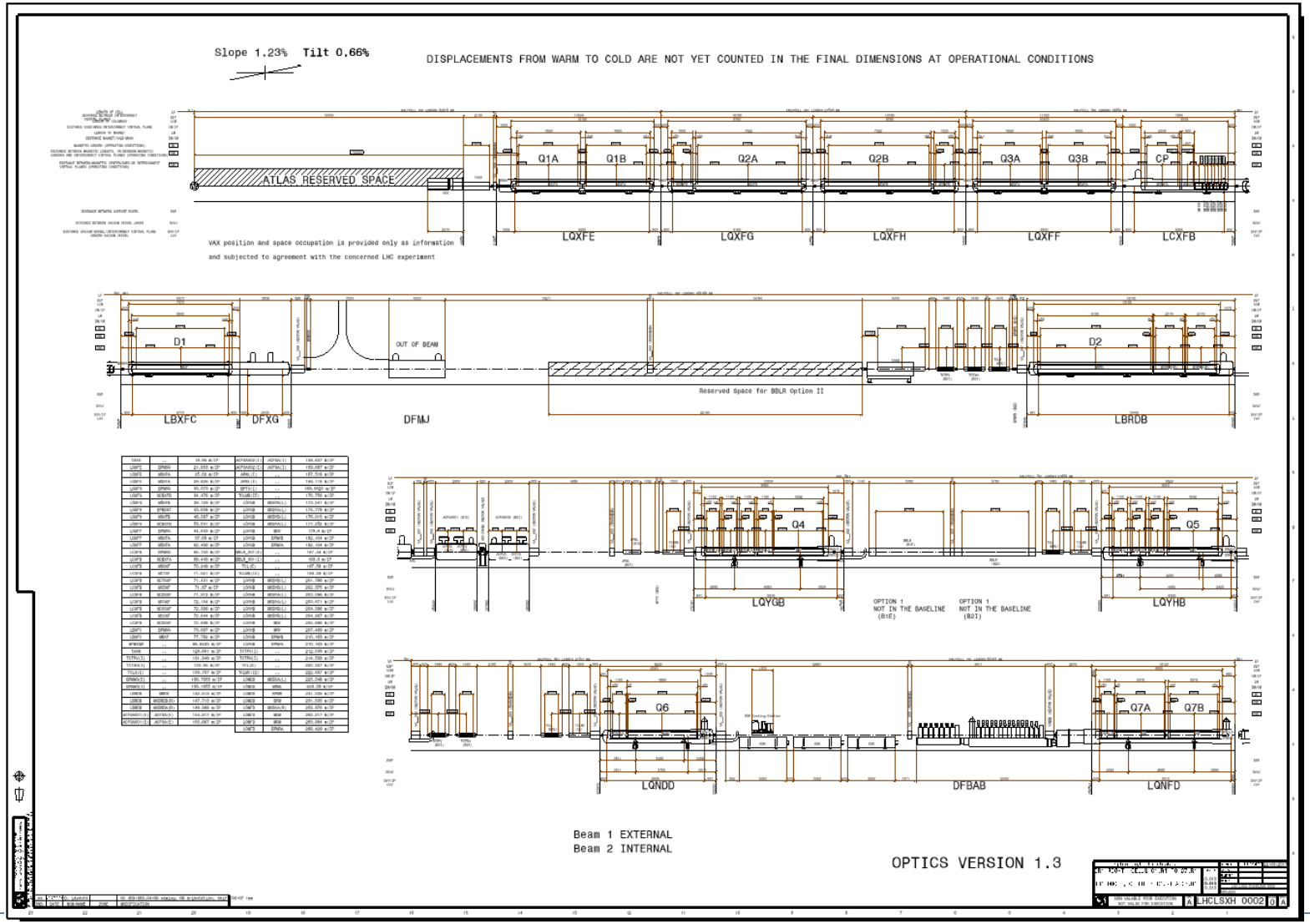

Data conceptual layout Excel engine

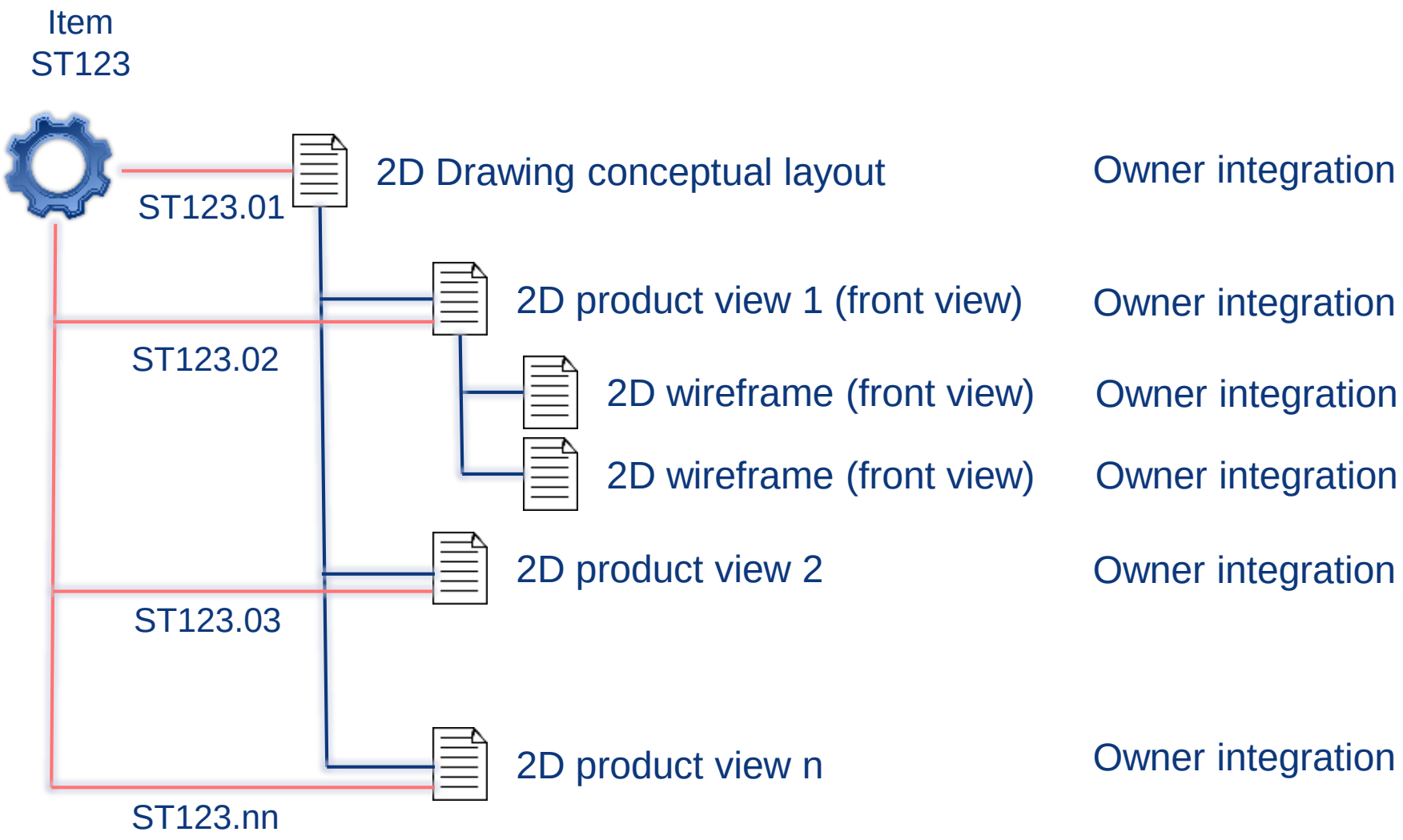

Data conceptual layout Ready for check

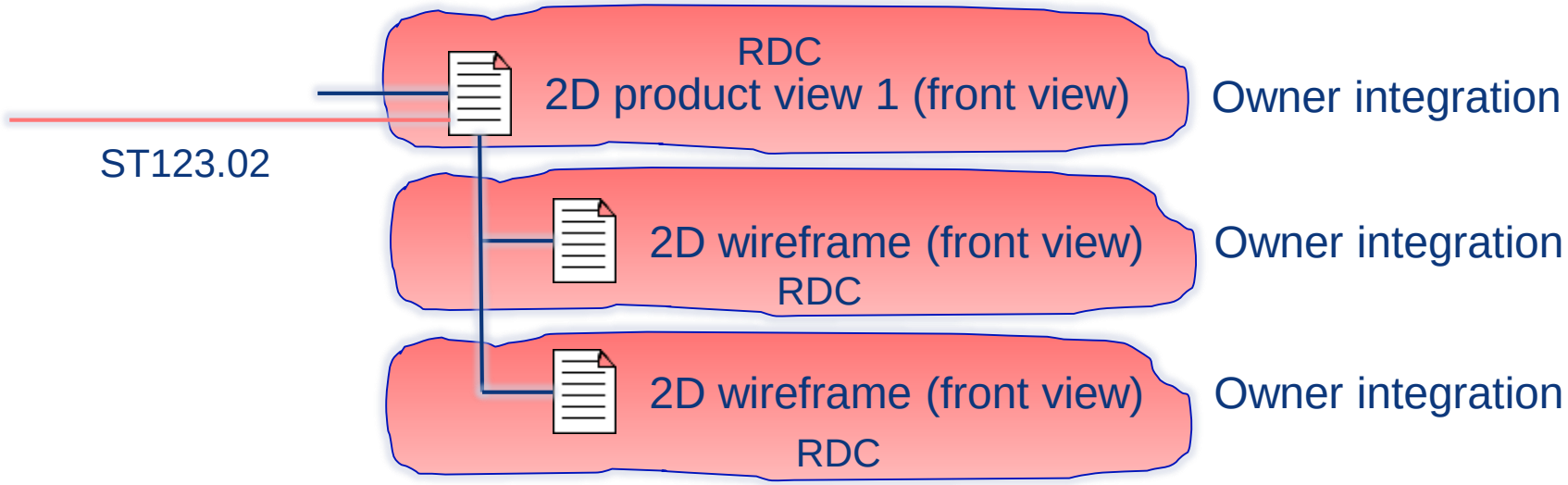

Data conceptual layout Ready for check

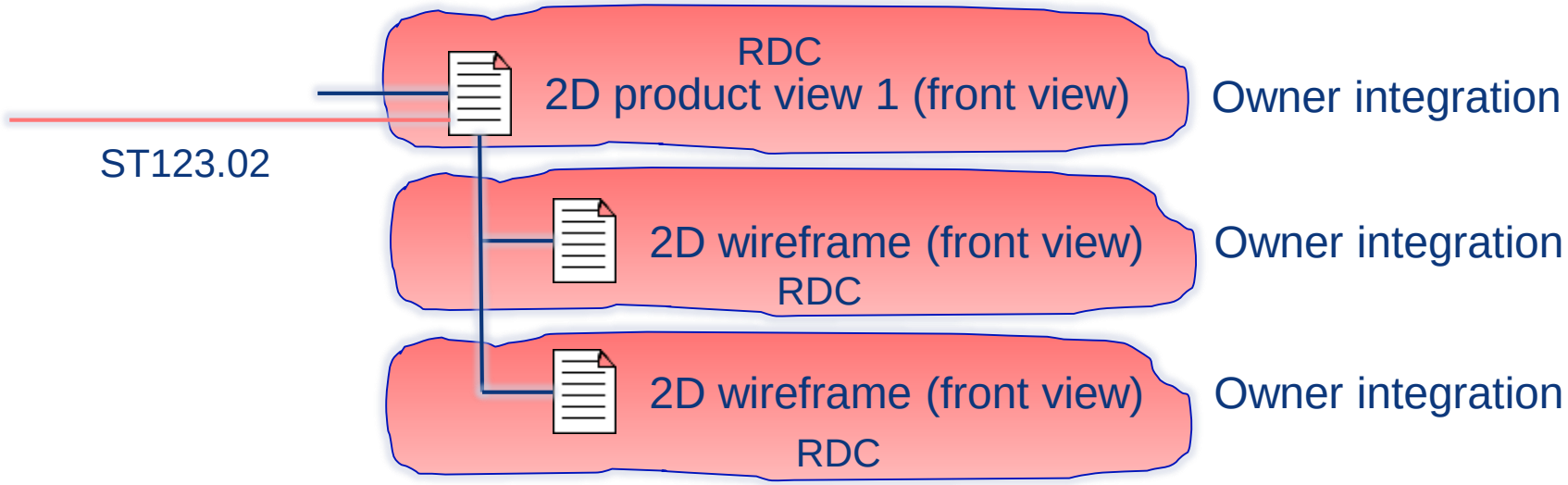

Data conceptual layout control

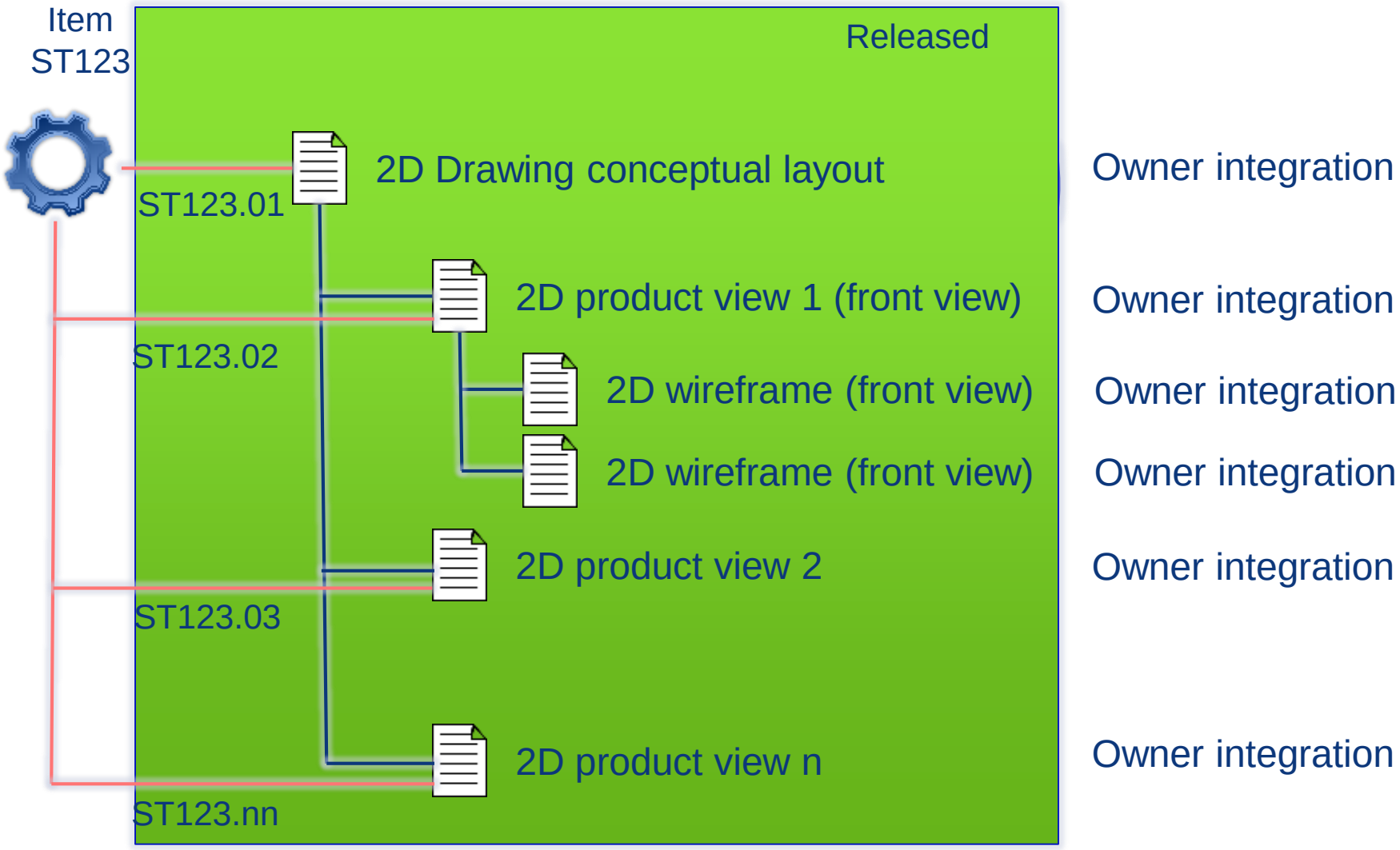

Data consolidated layout DMU engine

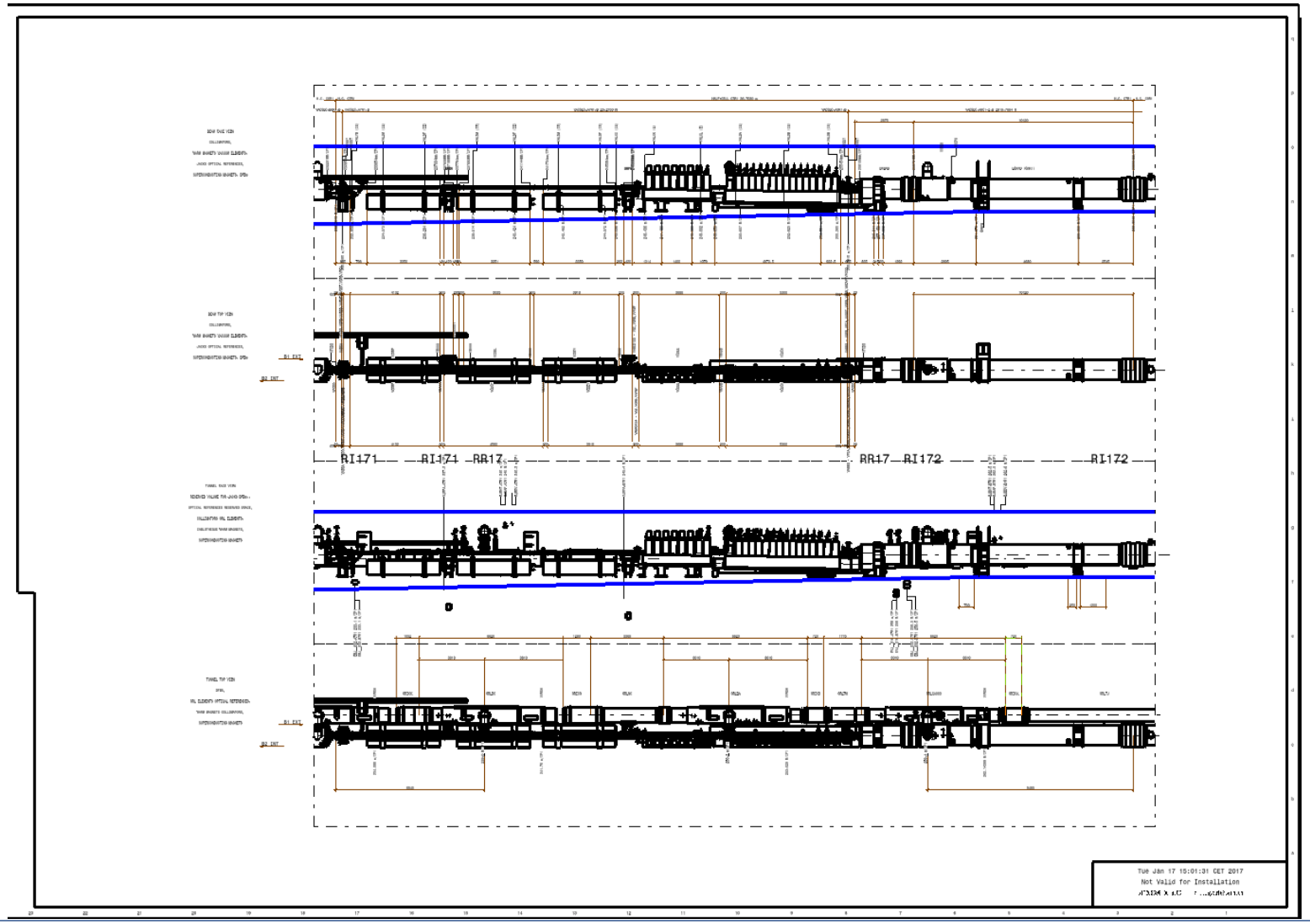

Data consolidated layout DMU engine

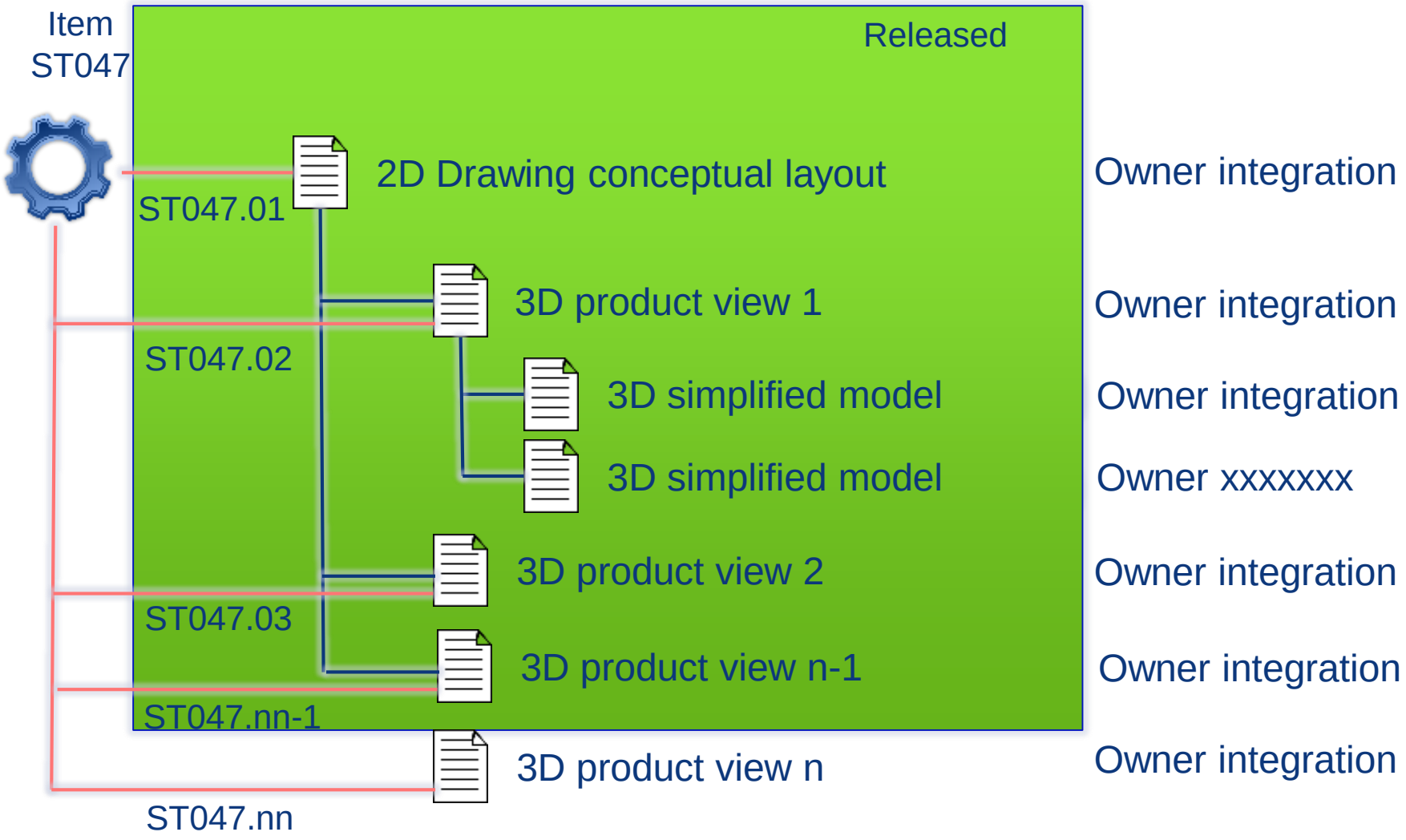

Data consolidated layout DMU engine

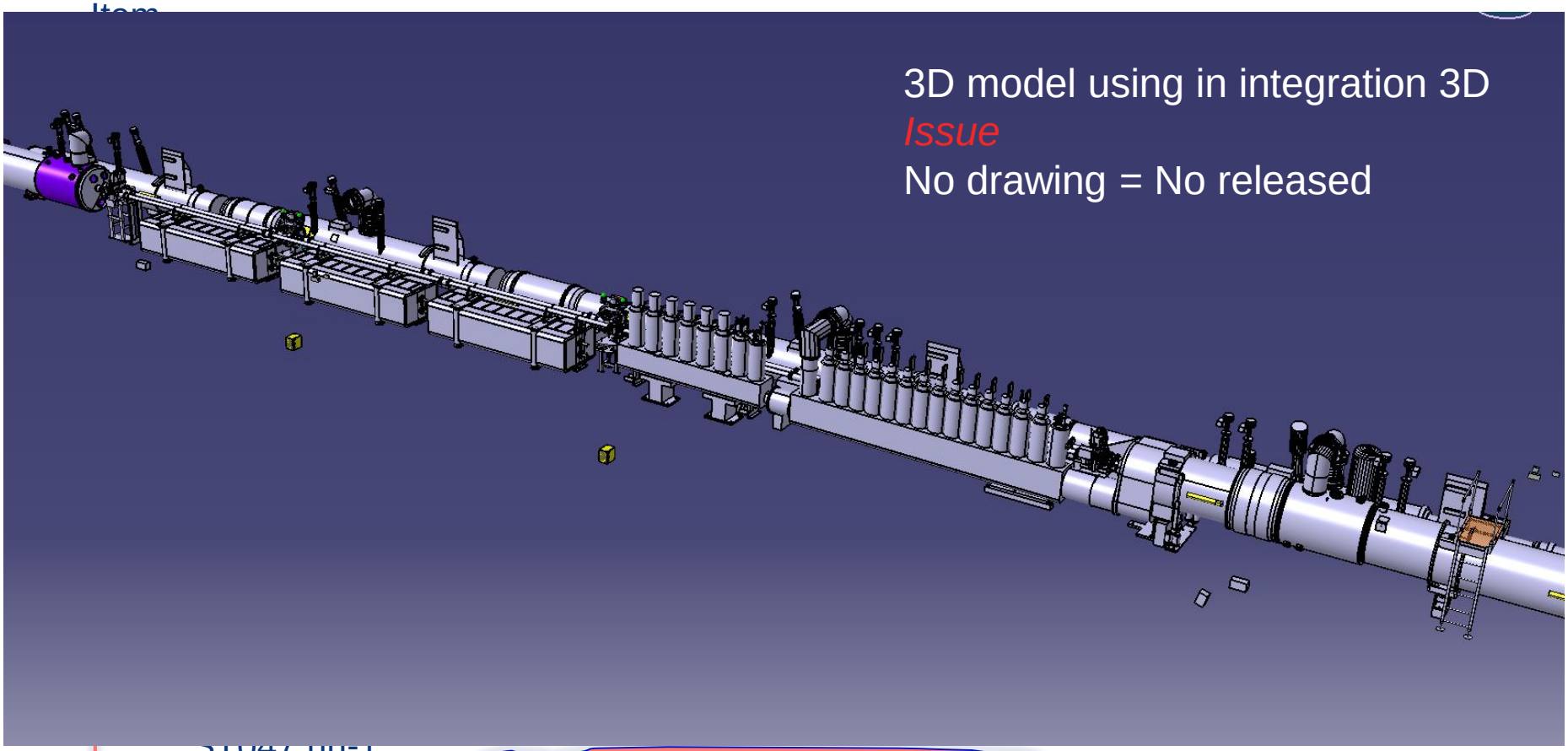

ST047.nn-1

3D product view n RDC

ST047.nn

Owner integration

Integration example - video

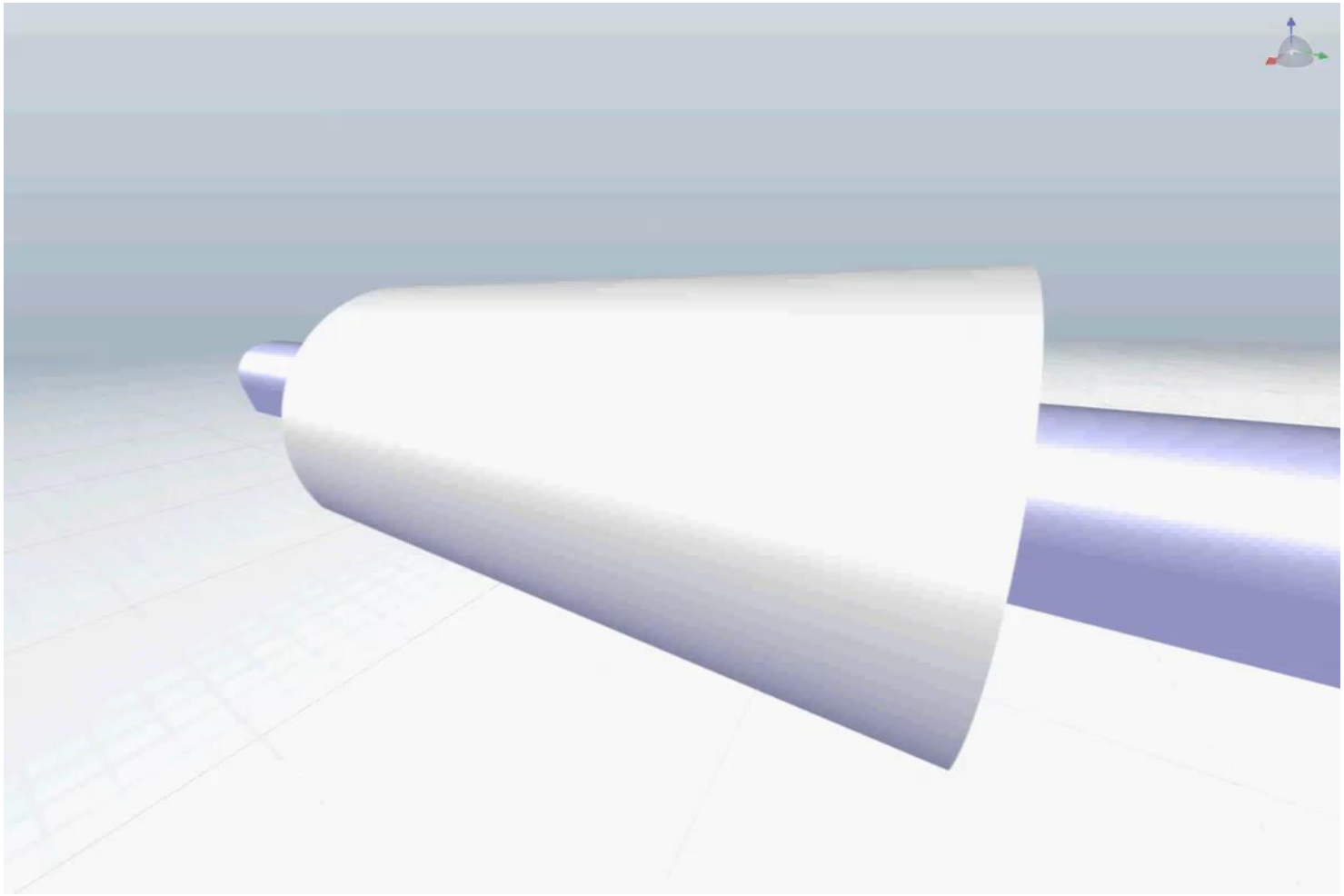

Integration work Process

Study phase

3D models

Integration Team + Design offices

Mechanical design office

- Vacuum
- Machine Equipment
- Magnet
- Beam Instrumentation
- RF equipment
- Etc..

Services design office

- Civil engineering
- Metallic structure
- Lift
- Shielding
- Piping
- Ventilation
- Ventilation door
- Câbles tray
- Electrical Eq.
- Cryogenic Eq.
- Access control
- Sector door
- Transport & handling
- Security Eq. Fire detection
- Survey

3D Scene

- Normally no integration drawing = no 3d model released.
- But integration is the owner of the top product and the 3D model services inside is under designer service responsability.
- Two main point:
  - Integration 3D model top product and all the other components should be released.
  - Integration 3D model top product can be use by other designer in a drawing. In this case the top product should be ready for check or released (and all the components)

CERN
EN
ENGINEERING
DEPARTMENT

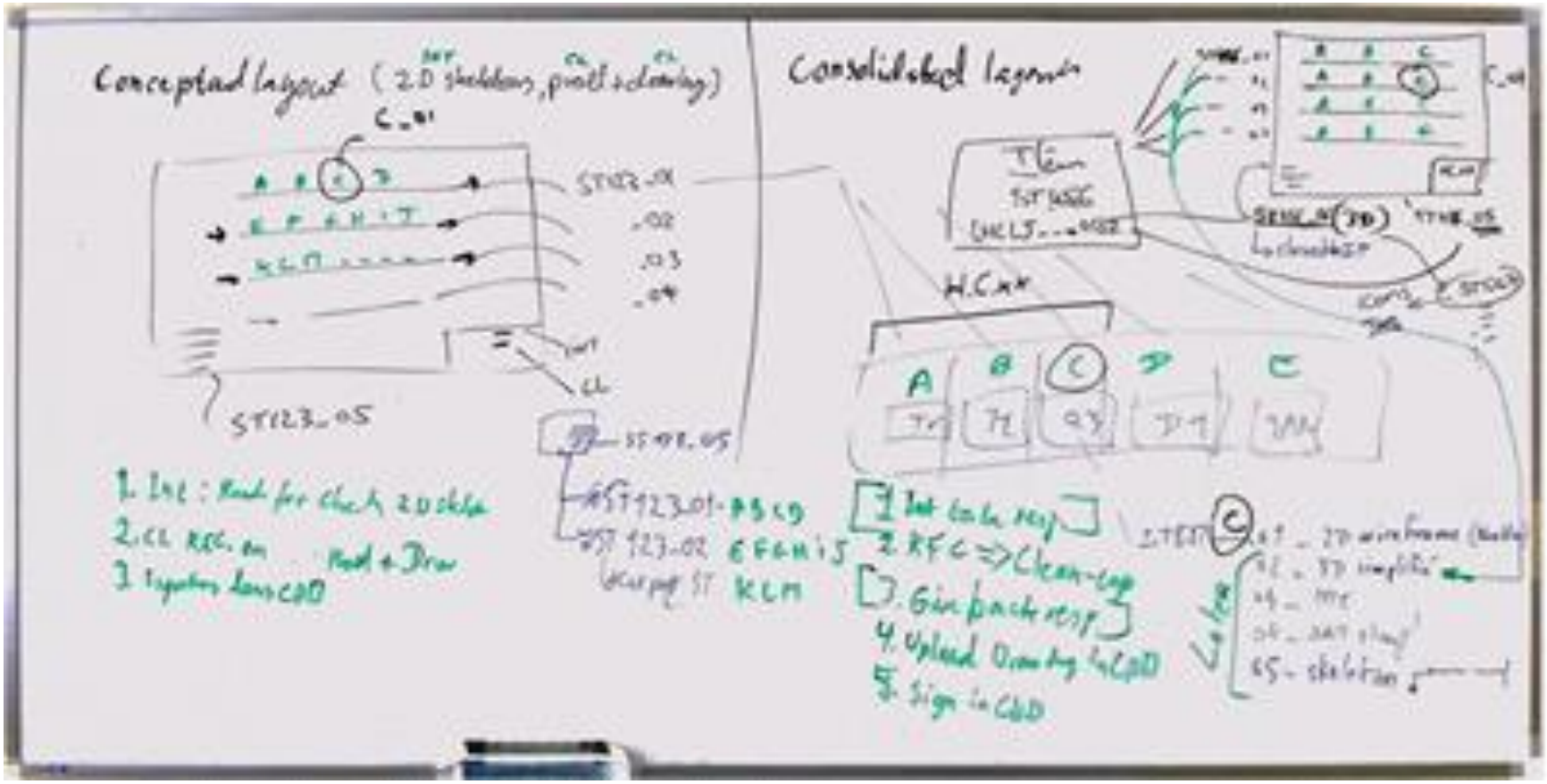
Conceptual layout
Consolidated layout
ST123_05
1. Int : Read for check 2D sketch
2. CL REC. on Read + Draw
3. Signature done CDD
1. Int to la resp
2. RFC => Clean-cap
3. Give back resp
4. Upload Drawing in CDD
5. Sign in CDD
65 - skeleton

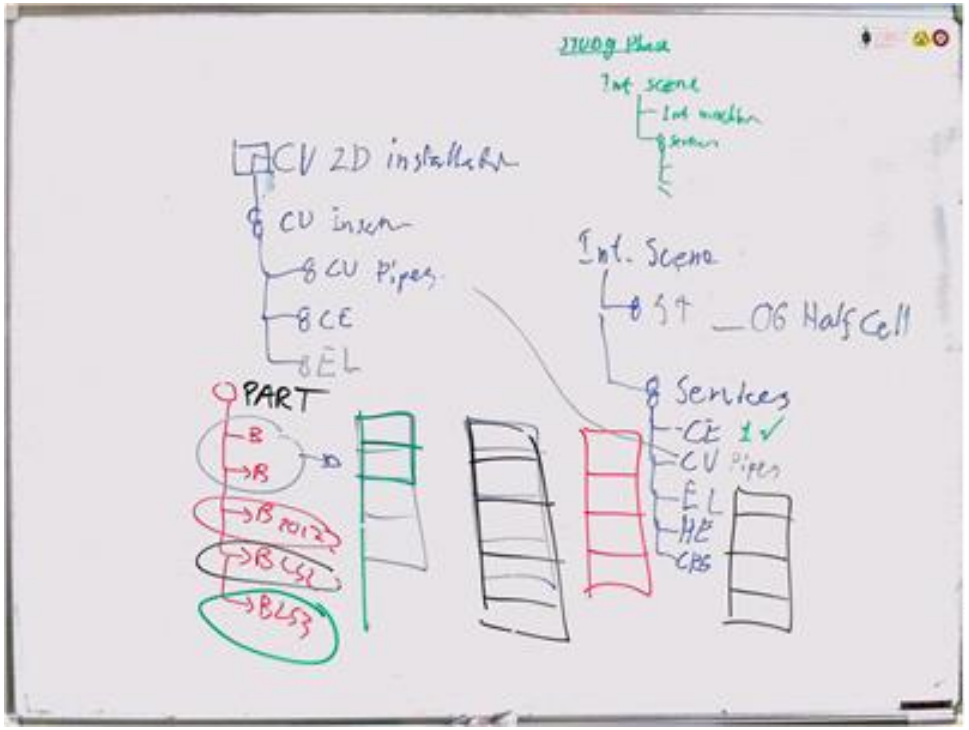
CV 2D installation
CV insert
CV Pipes
CE
EL
PART
Inst. Scene
Services
CE
CV Pipes
EL
HE
CBS