Experiments on Charged Lepton Flavour Violation at PSI

Andreas Knecht, Paul Scherrer Institut

Searches for cLFV

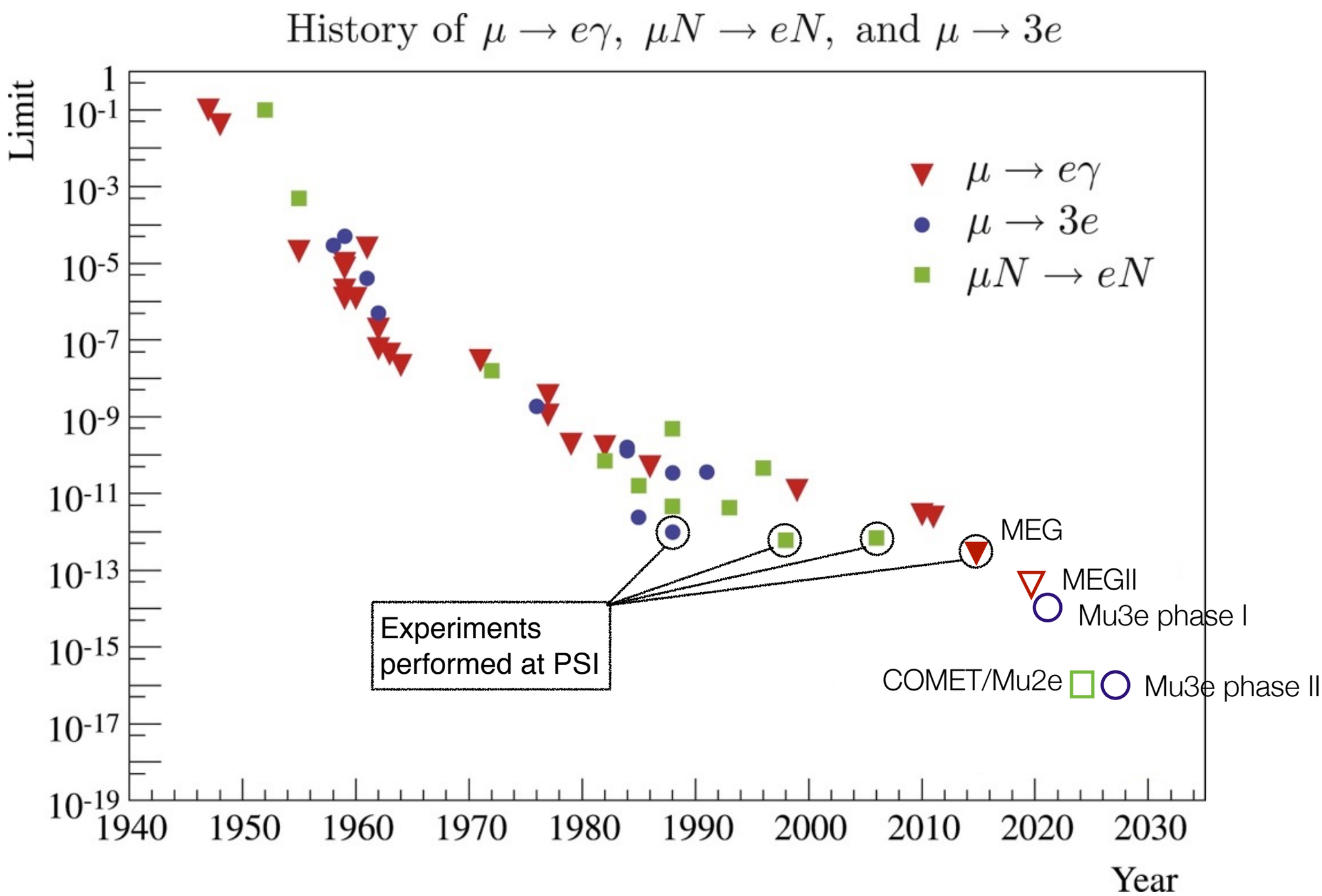

MEGII Detector

Wavedream
~9000 channels at 5GSPS

Updated and new Calibration methods
Quasi mono-chromatic positron beam

Liquid Xenon Gamma-ray Detector
Better uniformity w/ 12x12 VUV SiPM

x2 resolution everywhere

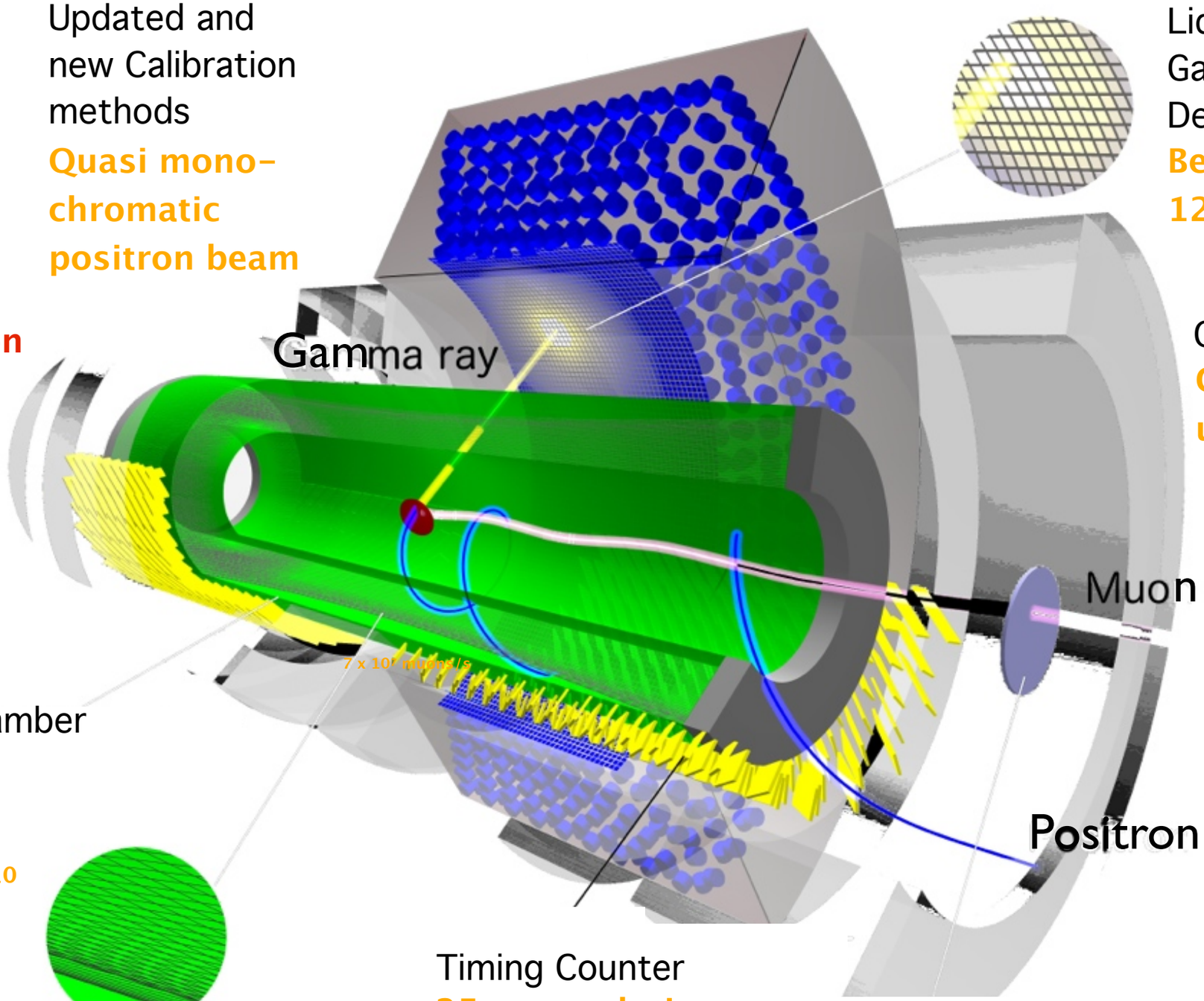

Cobra magnet
Gradient B field up to 1.3 T

Tech. coordination

Muon Beam and target
Full available stopped beam intensity 7×10^7

Drift Chamber
Single volume $He{:}iC_4H_{10}$

Timing Counter
35 ps resolution w/ multiple hits

Auxiliary detectors
Background rejection

MEGII Collaboration

Swiss Involvement MEGII

Wavedream
~9000 channels at 5GSPS

Updated and new Calibration methods
Quasi mono-chromatic positron beam

Liquid Xenon Gamma-ray Detector
Better uniformity w/ 12x12 VUV SiPM

x2 resolution everywhere

Cobra magnet
Gradient B field up to 1.3 T

Tech. coordination & Run coordination

Muon Beam and target
Full available stopped beam intensity 7×10^7

Drift Chamber
Single volume $He{:}iC_4H_{10}$

Timing Counter
35 ps resolution w/ multiple hits

Auxiliary detectors
Background rejection

Status & Outlook MEGII

PAUL SCHERRER INSTITUT

- Current best limit: $B(\mu^+ \to e^+\gamma) < 4.2 \times 10^{-13}$ (90% C.L.) Baldini et al., Eur. Phys. J. C **76**, 434 (2016)

- MEGII: Upgrade of sensitivity by a factor 10 → $B(\mu^+ \to e^+\gamma) < 6 \times 10^{-14}$
- MEGII engineering run: 2018

- Additional order of magnitude improvement: Cavoto et al., Eur. Phys. J. C **78**, 37 (2018)
  - At 10^8 μ^+/s: with improved and high-acceptance photon calorimetry
  - At 10^9 μ^+/s: with photon conversion and e^+e^- tracking

Mu3e Detector

Superconducting solenoid Magnet

Homogeneous field 1T

Tile detector

70 ps resolution w/ single hit

Fibre hodoscope

~ 500 ps resolution w/ multi hits thickness: < 0.3% X_0

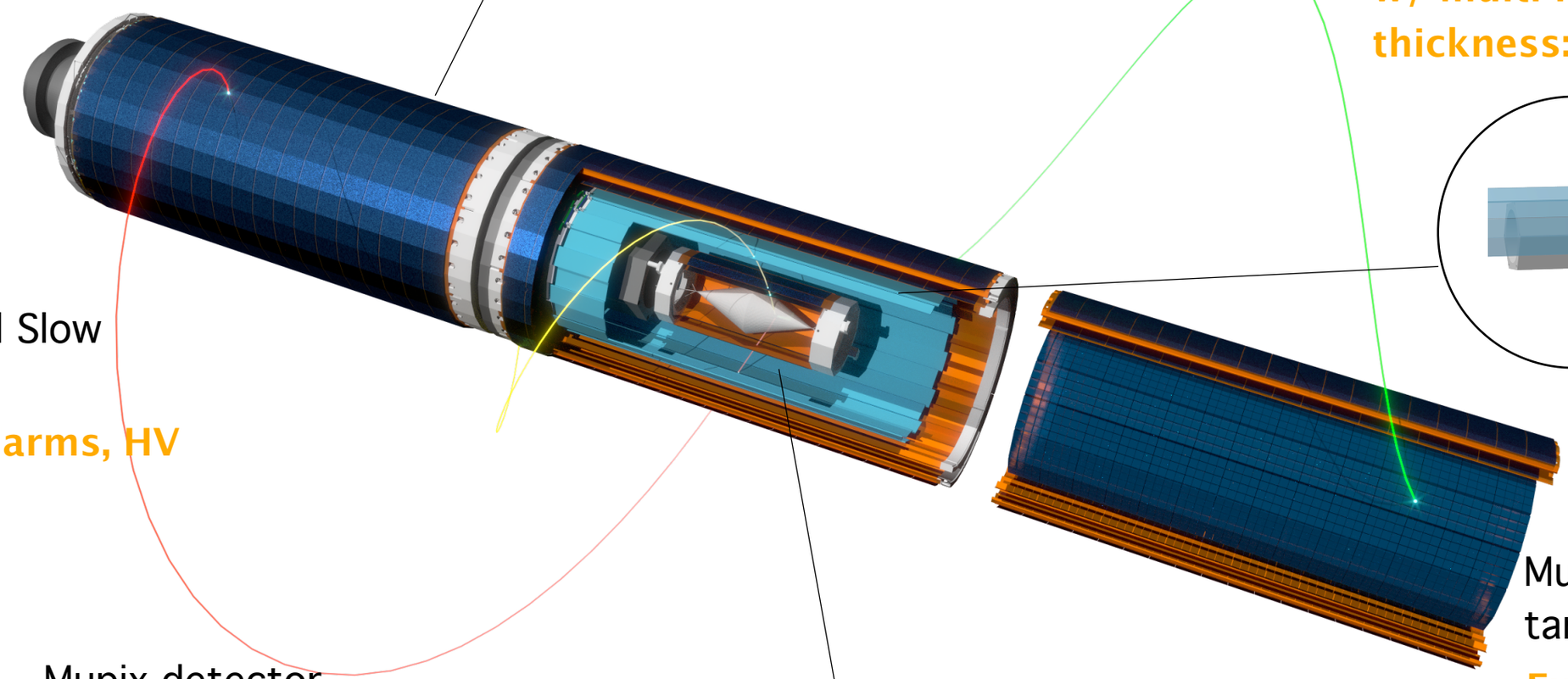

MIDAS DAQ and Slow Control

Run, history, alarms, HV etc.

Muon Beam and target

Full available beam intensity 2×10^8

Mupix detector

Tracking, integrate sensor and readout in the same device: 50 um thick

1 layer: ~ 0.1% X_0

Mu3e Collaboration

Switzerland:
PSI
ETH Zurich
Uni. of Geneve
Uni. of Zurich

Germany:
Karlsruhe Institut fur Technologie
J.G. Uni. Mainz
Uni. Heidelberg

UK:
University of Bristol
University of Liverpool
University College London
University of Oxford

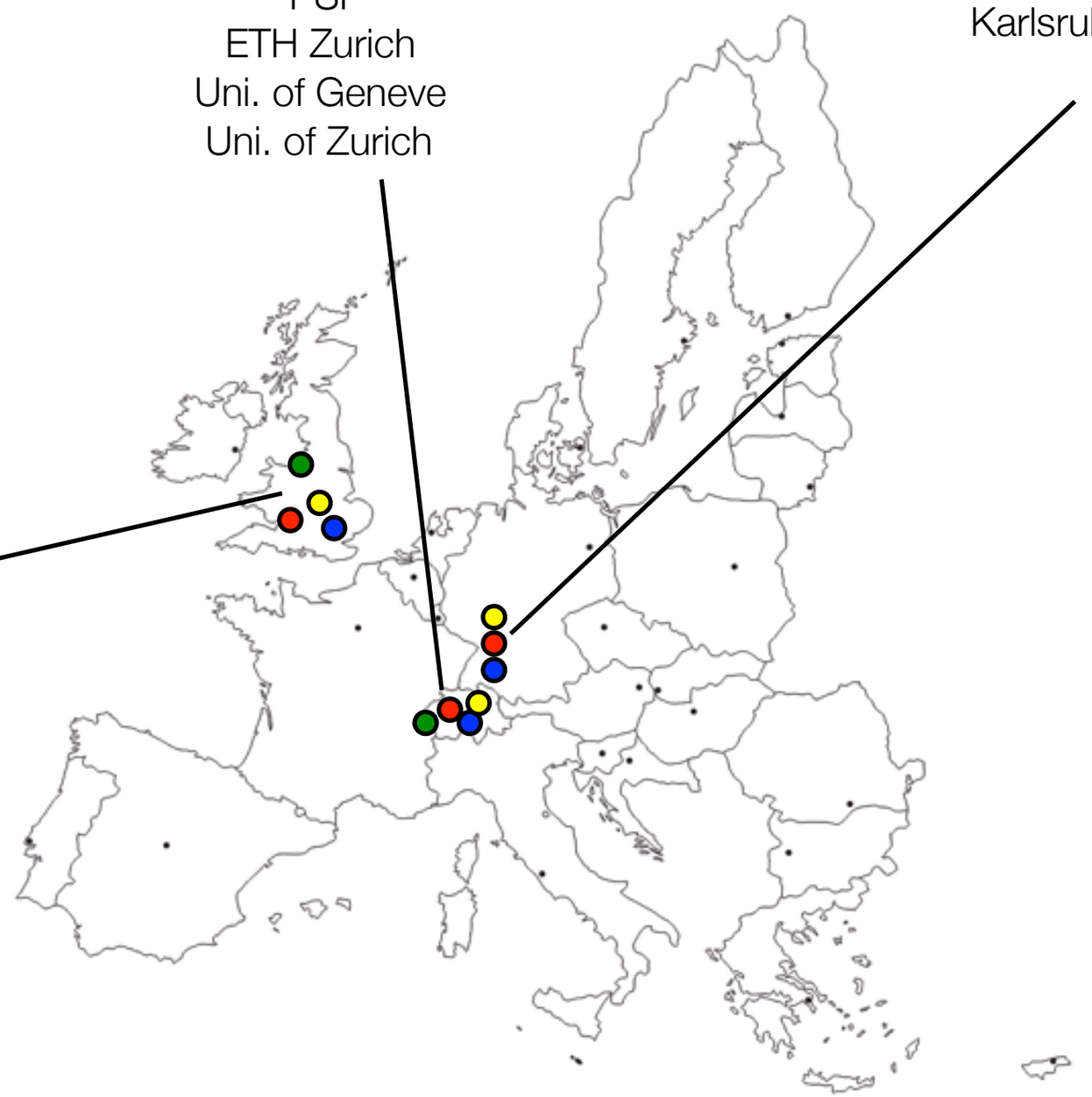

Swiss Involvement

Superconducting solenoid Magnet

Homogeneous field 1T

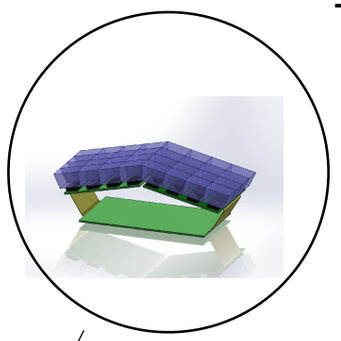

Tile detector

70 ps resolution w/ single hit

Fibre hodoscope

~ 500 ps resolution w/ multi hits thickness: < 0.3% X_0

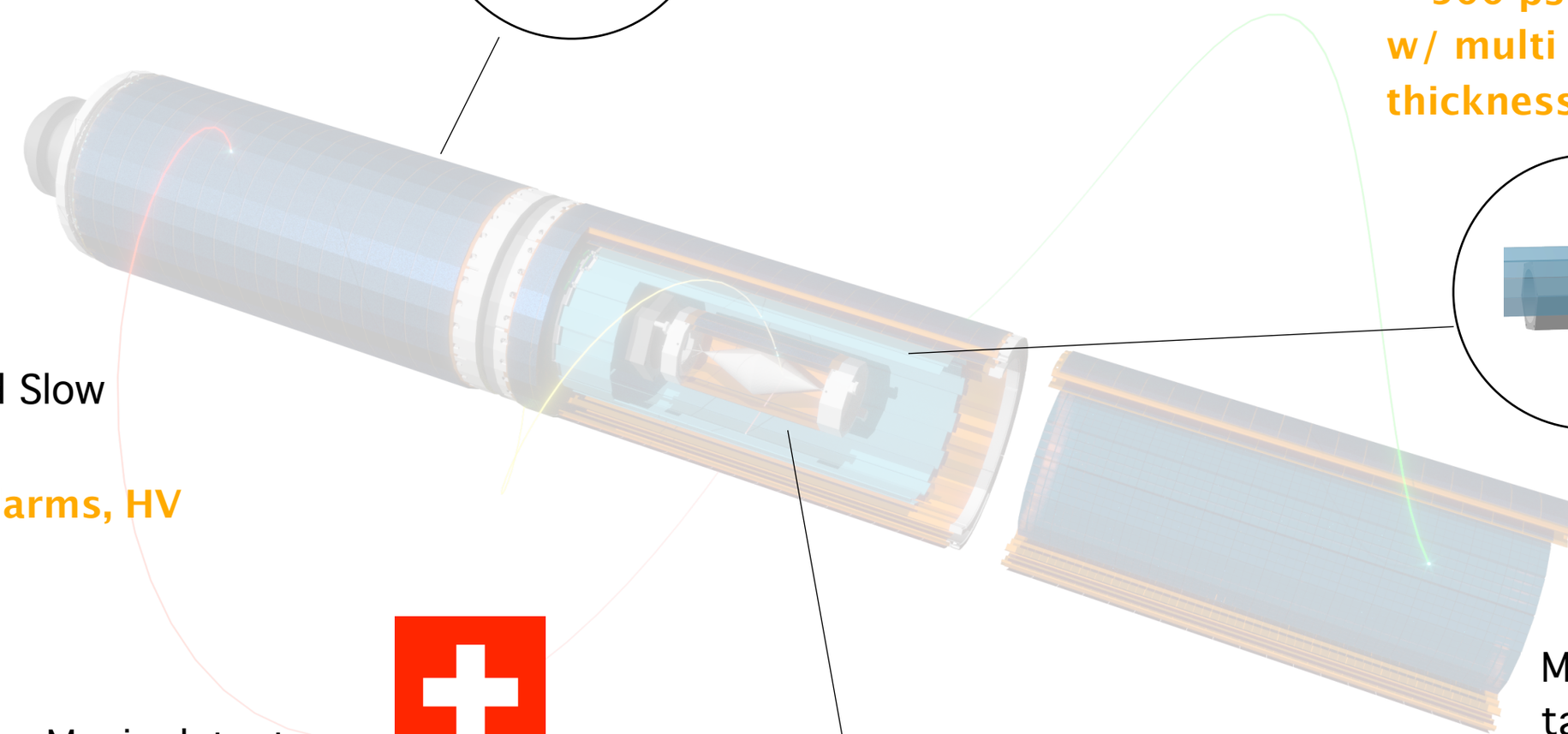

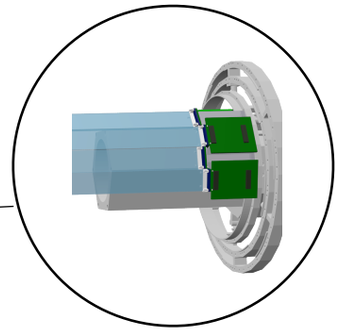

MIDAS DAQ and Slow Control

Run, history, alarms, HV etc.

Muon Beam and target

Full available beam intensity 2×10^8

Mupix detector

Tracking, integrate sensor and readout in the same device: 50 um thick
1 layer: ~ 0.1% X_0

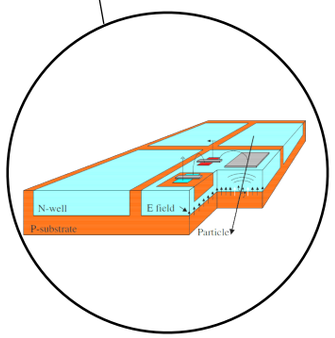

Status & Outlook Mu3e

- Current best limit: $B(\mu^+ \rightarrow e^+e^+e^-) < 1.0 \times 10^{-12}$ (90% C.L.) Bellgardt et al., Nucl. Phys. B**299**, 1 (1988)

- Mu3e:
  - Phase-I: At 10^8 μ^+/s → $B(\mu^+ \rightarrow e^+e^+e^-) < 2 \times 10^{-15}$
  - Phase-I: Engineering run 2021
  - Phase-II: At $>10^9$ μ^+/s→ $B(\mu^+ \rightarrow e^+e^+e^-) < 10^{-16}$

Searches for Muon to Electron Conversion

- Current best limit: $B(\mu^- N \rightarrow e^- N) < 6.5 \times 10^{-13}$ (90% C.L., Ti) Eggli, Thesis Uni. Zürich (1995)
  $B(\mu^- N \rightarrow e^- N) < 7.0 \times 10^{-13}$ (90% C.L., Au) Bertl et al., Eur. Phys. J. C **47**, 337 (2006)

- To reduce backgrounds requires pulsed beams
- Efforts under way at J-PARC and Fermilab

DeeMe at J-PARC

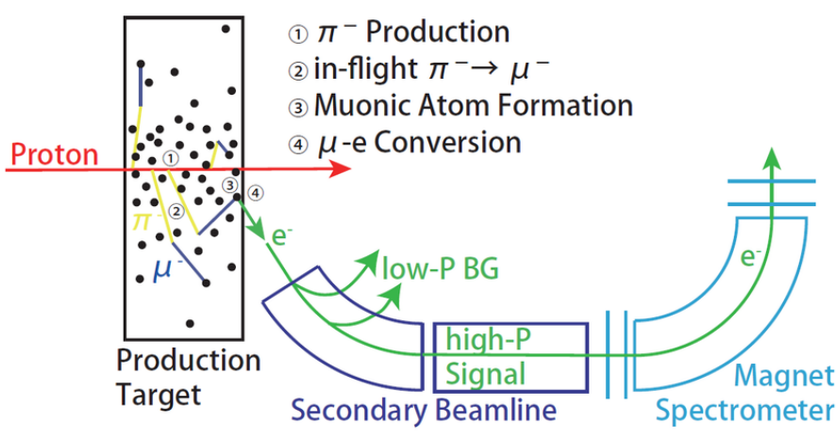

Improve limit by 1 - 2 orders of magnitude depending on target

Mu2e at J-Fermilab

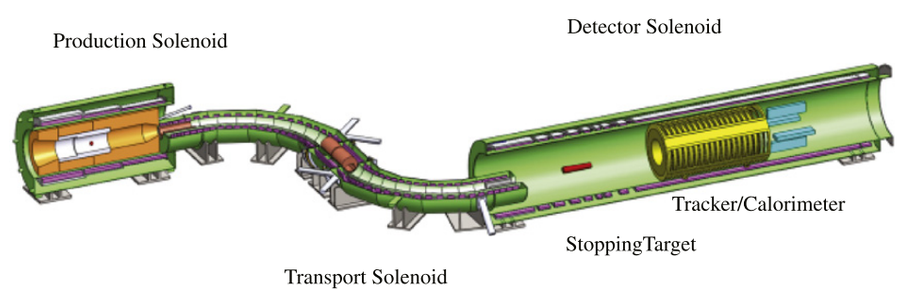

Improve limit by 4 orders by 2025

COMET at J-PARC

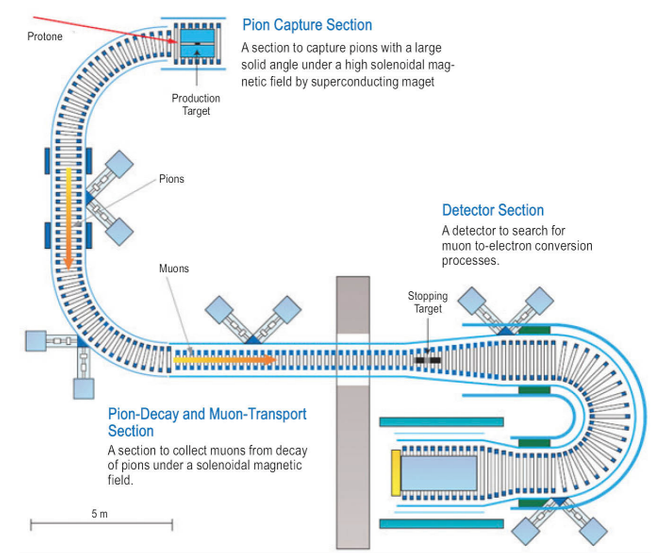

Improve limit by 2 orders by 2020 and 4 orders by 2023

piE5 Beam Line

- Coincidence experiments like MEG-II and Mu3e only possible at continuous beams, i.e. PSI
- piE5 is the beam line with the highest muon intensity available for particle physics: ~ 2 x 10^8 μ^+/s

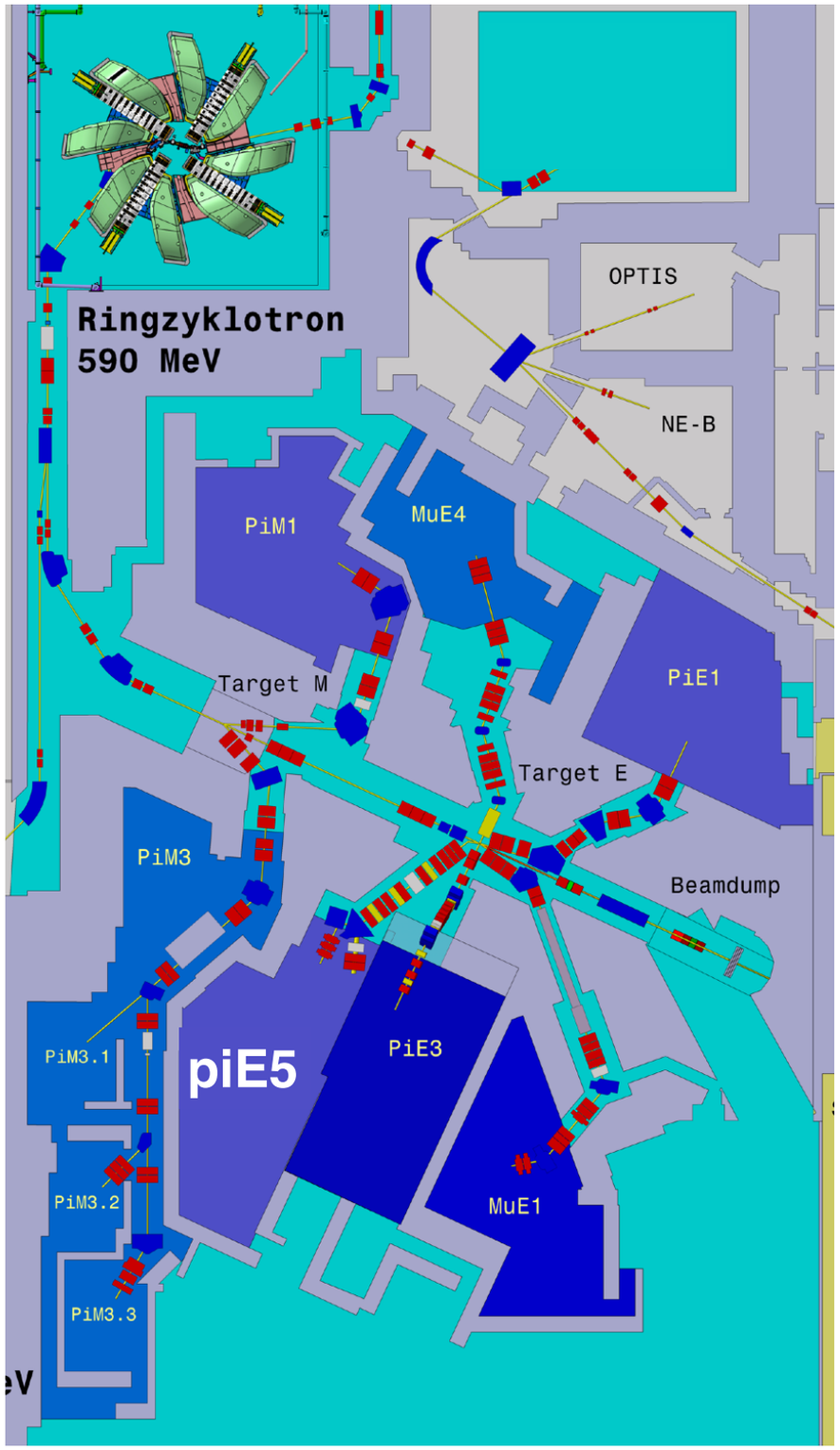

HiMB Project

- Replacement of existing TgM by new target station M* with 20 mm thick graphite slab at 5° located a few meters downstream

- Split capture solenoid channel close to target
  - One side: particle physics (high-intensity)
  - Other side: materials science (high-polarization)

- Normal conducting solenoids
  - Front-end: radiation hard
  - Similar to existing μE4 solenoids

- First (simple) beam optics shows that $O(10^{10})$ μ^+/s can be transported

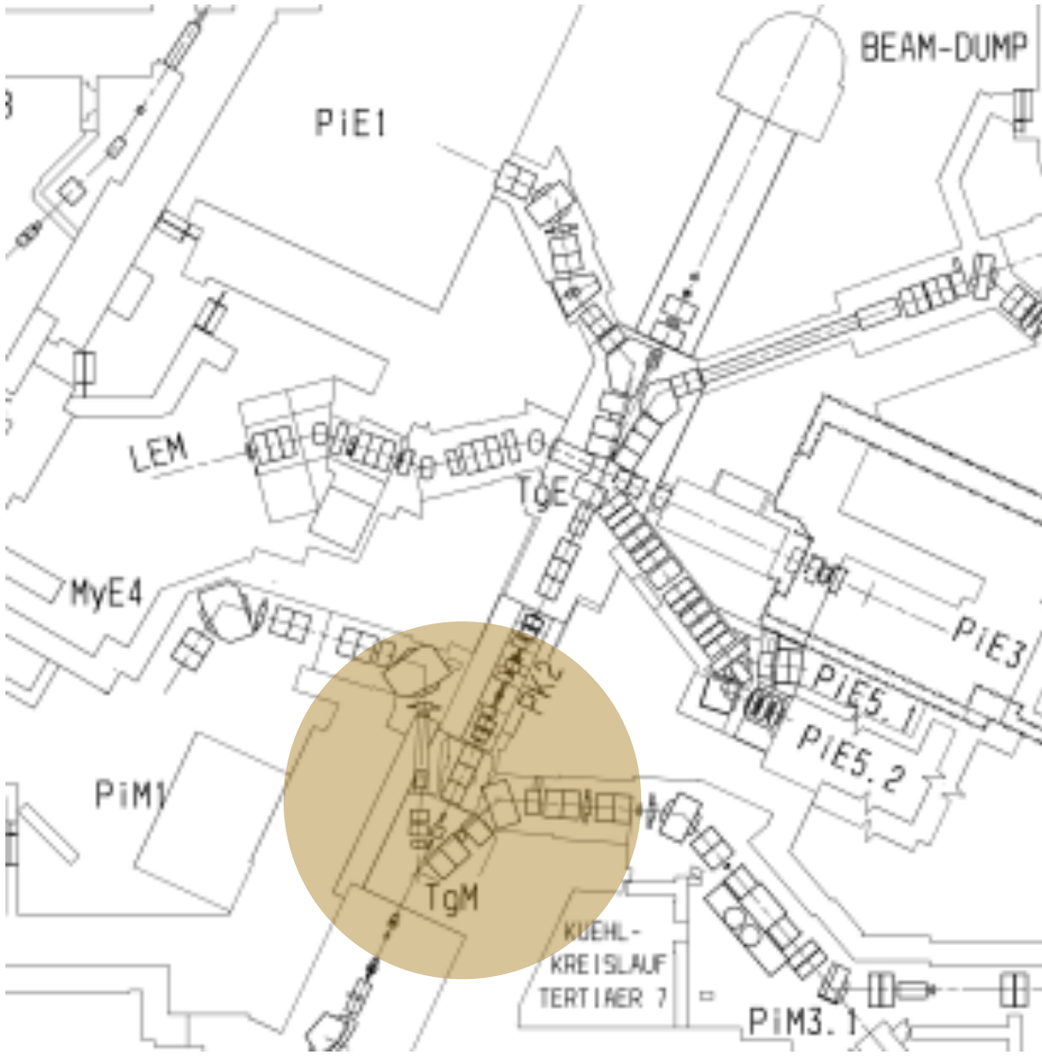

Summary

- Exciting prospects for highly improved sensitivity in charged lepton flavour violation searches with muons in the next 10 years
- PSI uniquely suited for coincidence experiments like MEG-II and Mu3e
- Next phases of experiments will need higher beam rates than currently available at PSI. Started HiMB project to deliver $O(10^{10})$ μ^+/s.

Backup

Muon-cLFV coincidence experiments

Gold channels: the $\mu^+ \to e^+ \gamma$ and $\mu^+ \to e^+ e^+ e^-$ decays

	MEG and MEGII (CH)	**SINDRUM** and Mu3e (CH)
Signature	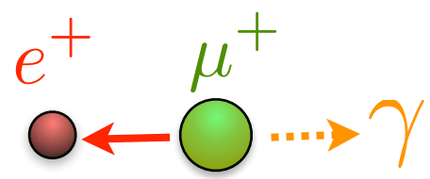 $E_e = E_\gamma = m_\mu/2$ $\Delta\Theta_{e\gamma} = 0$ $\Delta t_{e\gamma} = 0$	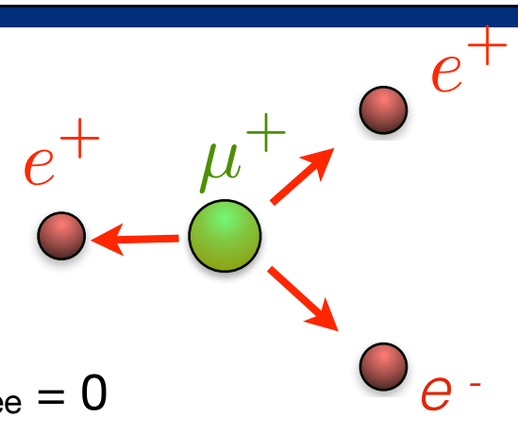 $\Delta t_{eee} = 0$ $\left\lvert \sum \vec{p}_e \right\rvert = 0$ $\sum E_e = m_\mu$
Correlated Background	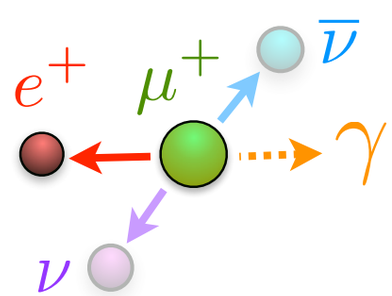	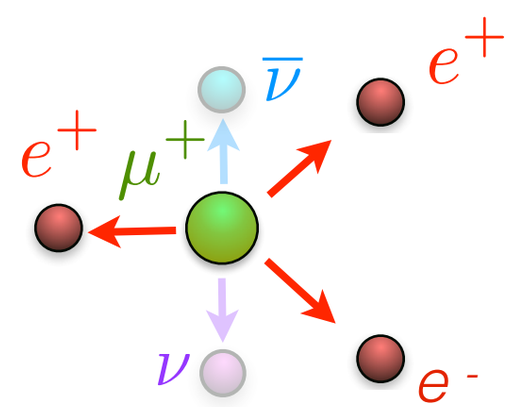
Accidental Background	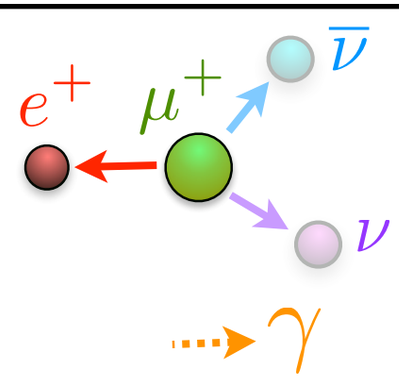	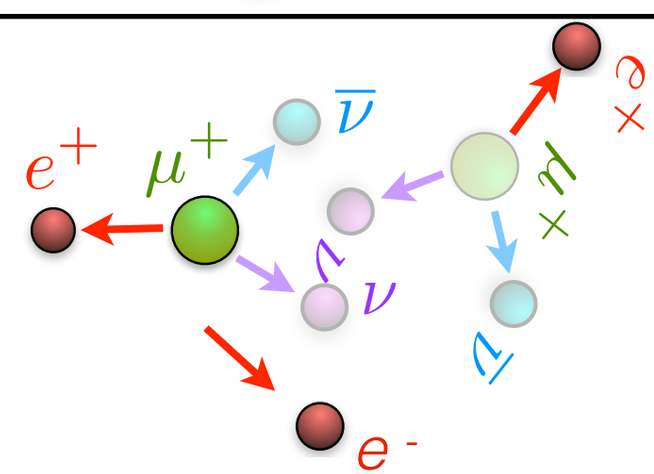

How the sensitivy can be pushed down?

Using the $\mu^+ \rightarrow e^+ \gamma$ search as an example

Current upper limit	future sensitivity
BR ($\mu^+ \rightarrow e^+ \gamma$) < 4.2 x 10^{-13} (MEG)	SES ($\mu^+ \rightarrow e^+ \gamma$) ~ 5 x 10^{-14} (MEGII)
BR ($\mu^+ \rightarrow e^+ e^+ e^-$) < 1.0 x 10^{-12} (SINDRUM)	SES ($\mu^+ \rightarrow e^+ e^+ e^-$) ~ 10^{-16} (Mu3e)

- More sensitive to the signal...

high statistics

$$SES = \frac{1}{R \times T \times A_g \times \varepsilon(e^+) \times \varepsilon\,(gamma) \times \varepsilon(TRG) \times \varepsilon(sel)}$$

Beam rate

Acquisition time

Geometrical acceptance

Detector efficiency

Selection efficiency

- More effective on rejecting the background...

high resolutions

$$B_{acc} \sim R \times \Delta E_e \times (\Delta E_{gamma})^2 \times \Delta T_{egamma} \times (\Delta \Theta_{egamma})^2$$

Momentum resolution

Energy resolution

Relative timing resolution

Relative angular resolution

cLFV best upper limits

Process	Upper limit	Reference	Comment
$\mu^+ \to e^+ \gamma$	4.2×10^{-13}	arXiV:1605.05081	MEG
$\mu^+ \to e^+ e^+ e^-$	1.0×10^{-12}	Nucl. Phy. B299 (1988) 1	SINDRUM
$\mu^- N \to e^- N$	7.0×10^{-13}	Eur. Phy. J. c 47 (2006) 337	SINDRUM II
$\tau \to e \gamma$	3.3×10^{-8}	PRL 104 (2010) 021802	Babar
$\tau \to \mu \gamma$	4.4×10^{-8}	PRL 104 (2010) 021802	Babar
$\tau^- \to e^- e^+ e^-$	2.7×10^{-8}	Phy. Let. B 687 (2010) 139	Belle
$\tau^- \to \mu^- \mu^+ \mu^-$	2.1×10^{-8}	Phy. Let. B 687 (2010) 139	Belle
$\tau^- \to \mu^+ e^- e^-$	1.5×10^{-8}	Phy. Let. B 687 (2010) 139	Belle
$Z^0 \to \mu e$	7.5×10^{-8}	Phy. Rev. D 90 (2014) 072010	Atlas ($\mu \to 3e$: 10^{-12})
$Z^0 \to \mu e$	7.3×10^{-8}	CMS PAS EXO-13-005	CMS
$H \to \tau \mu$	1.85×10^{-2}	JHEP 11 (2015) 211	Atlas (*)
$H \to \tau \mu$	1.51×10^{-2}	Phy. Let. B 749 (2015) 337	CMS
$K_L \to \mu e$	4.7×10^{-12}	PRL 81 (1998) 5734	BNL

* $B(H \to \mu e) < O(10^{-8})$ from $\mu \to e \gamma$

Future MEG

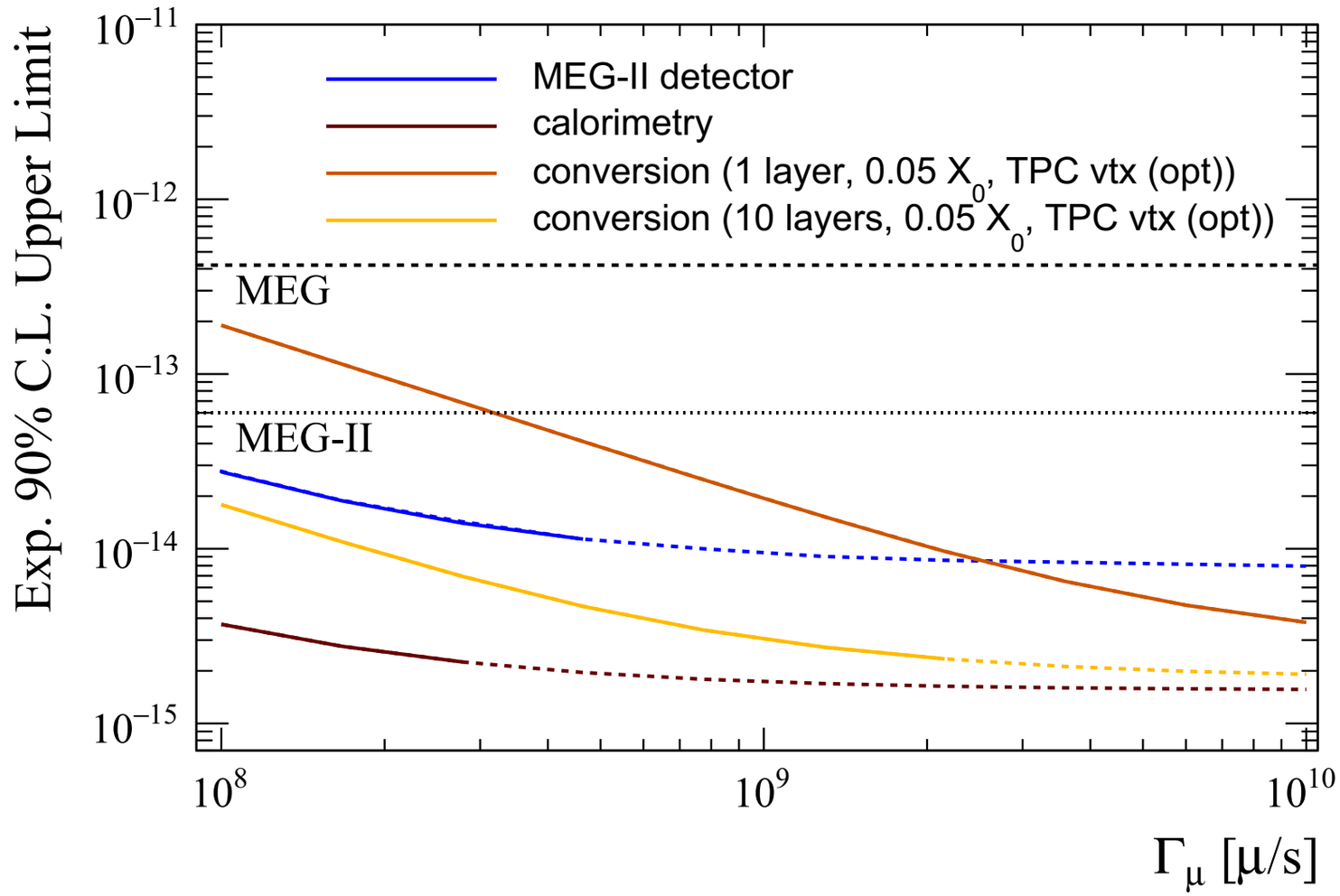

Fig. 8 Expected 90% C.L. upper limit on the Branching Ratio of $\mu^+ \to e^+\gamma$ in different scenarios for a 3-year run. Calorimetery and the photon conversion technique are compared. The lines turn from continuous to dashed when the number of background events exceeds 10. The horizontal dashed and dotted lines show the current MEG limit and the expected MEG-II sensitivity

Cavoto et al., Eur. Phys. J. C **78**, 37 (2018)