# Upgrade of the ATLAS Tile Calorimeter for the High Luminosity LHC

Krystsina Petukhova, Charles University (CZ)
krystsina.petukhova@cern.ch
on behalf of the Tile Calorimeter System

29th International Symposium on Lepton Photon Interactions at High Energies, 2019 No.273

## Hadronic Tile calorimeter (TileCal)

- Hadronic Tile calorimeter covers the central region of the ATLAS experiment.
- It measures the energy of hadrons, jets, $\tau$-leptons, $E_{\mathrm{T}}^{\mathrm{miss}}$.
- It is a sampling calorimeter made of steel absorbers and tile scintillators (as active medium).
- Scintillators are readout by wavelength shifting fibers linked to photomultiplier tubes (PMTs).
- The TileCal is composed of 256 wedge-shaped modules, each house a Superdrawer (SD).
- In a SD, each of 8 identical Digitizer Boards read outs a group of 6 PMTs.
  - Signals from the PMTs are summed and provided to the Level 1 Calorimeter trigger.
  - The analog signal is amplified, shaped, digitized, and stored in front-end pipeline memories.
  - With positive Level 1 trigger decision, selector stores samples in a buffer.
  - The interface card transfers the event frames to the off-detector Read-Out Drivers (RODs).

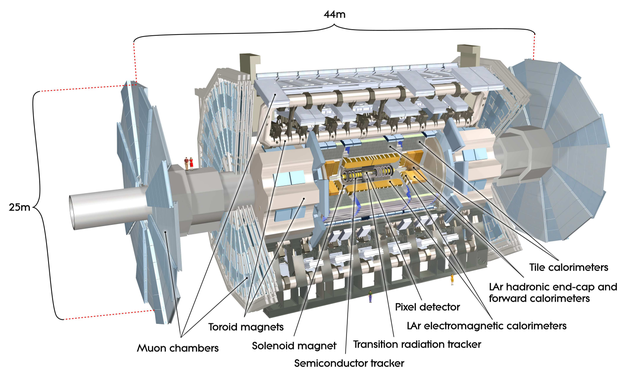


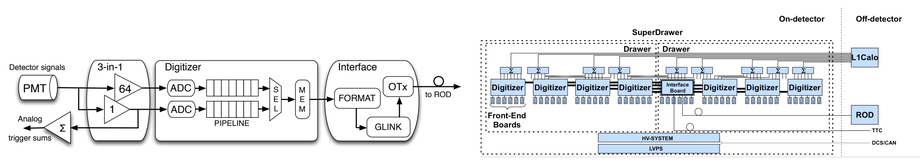


## TileCal in High-Luminosity LHC

- The High-Luminosity LHC (HL-LHC) will operate with the instantaneous luminosity of 5-10 times larger than the nominal LHC value ($10^{34}$ cm$^{-2}$s$^{-1}$).
- TileCal will require a new electronics to provide a fully digital input for ATLAS trigger system designed with flexible logic and improved granularity.
- All components need to withstand higher ambient radiation (2-24 Gy for 4 ab$^{-1}$) and the high luminosity environment ($\sim$200 collisions per bunch crossing).
- Fully digital data are provided at the full LHC rate (400 times higher than it is now), enabling better energy resolution and reducing the effect of pile-up.
- The upgrade provides an increased data throughput with high-performance large-width readout links (40 Tbps for the entire detector readout).
- The system reliability is assured by the power supply and data links redundancy, controlled FPGAs, readout modularity (smaller drawers, detached DAQ).
- The upgraded TileCal improves calibration infrastructure, voltage distribution. $\sim$10% of the most exposed PMTs are replaced due to radiation and time aging.

## Electronics layout of the HL-LHC TileCal

- A SD is divided into 4 Minidrawers (MDs) with an independent readout and a separate power supply.
- A MD hosts 12 PMTs and 12 Front-End Boards (FEB) named FENICS **F**ront-**e**nd electro**nics**.
- The FENICS card performs signal shaping and amplification (2 gains) in a 17-bit dynamic range (0-800 pC).
- A Mainboard (MB) digitizes the input from 12 FEB with 12-bit ADCs @40 Msps.
- A Daughterboard (DB) transfers the high-speed (up to 4 x 9.6 Gbps) bi-gain output from 12 channels every 25 ns to the back-end, distributes LHC clock settings, liaise the on- and off-detector electronics.
- A Tile PPr (Preprocessor) buffers data from all MD in pipelines located off-detector; evaluates signal at the full 40 MHz rate; calculates trigger objects; distributes the sampling clock and detector control information.
- TDAQi interfaces with trigger and ATLAS TDAQ, sends accepted data to the FELIX (**F**ront **E**nd **LI**nke**X**change).
- A High Voltage (HV) Power Supply has better temperature and voltage stability, remote or internal control.
- A Low Voltage Power Supply (LVPS) has lower noise, better reliability, and point-of-load regulators.

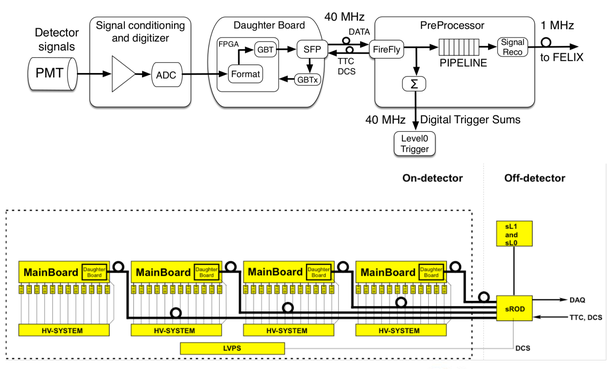


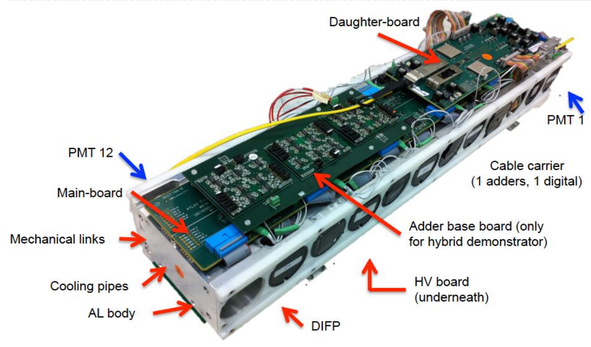


## Prototype beam and radiation tests

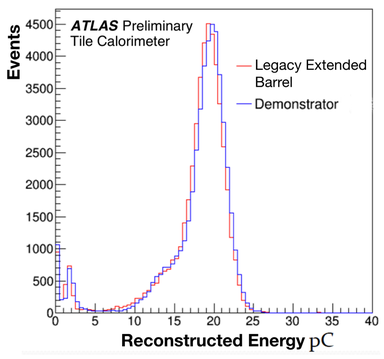


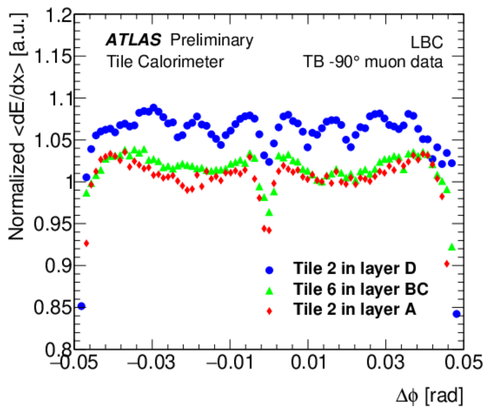


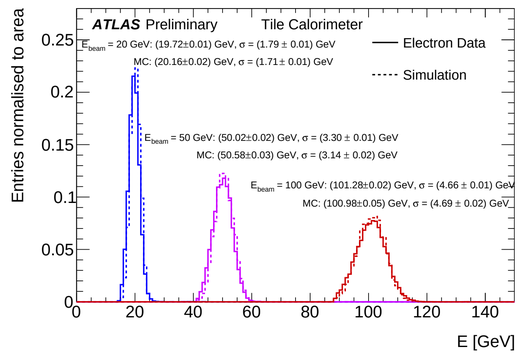


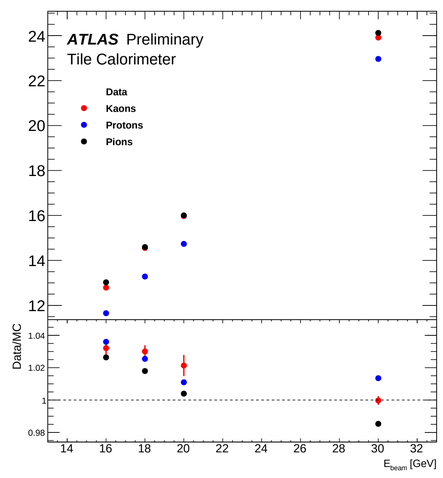


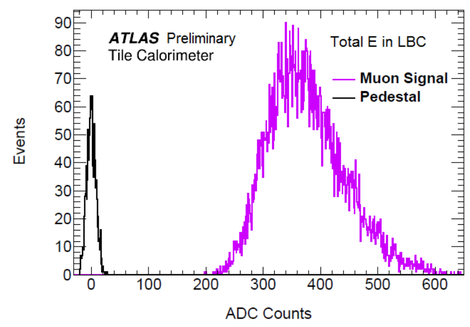


- The TileCal Demonstrator is a hybrid drawer with the upgraded electronics prototype and the legacy TDAQ, detector control and calibration systems.
- The Hybrid Demonstrator underwent 7 test beam (electrons, muons, hadrons) campaigns at the CERN SPS on the H8 beamline facility in 2015-2018.
- The test beam results show good performance of the new electronics. The measurements are aligned with the results obtained with the legacy system.
- The dependence of the cell response to muons on the impact point $\phi$ has the expected U-shape; the module allows good separation of the particles of different type and energies as well as electronic noise separation from low-energy signal. The observations agree with the Monte Carlo (MC) prediction.
- The components underwent continuous radiation tolerance tests (CRC, BERT, TID, SEE, SEL) showed no destructive errors or latch-ups, stable voltages.

## Prototype insertion in the ATLAS detector & Outlook

- In July 2019 (Long Shutdown 2018-2019), a prototype of the TileCal was inserted in the ATLAS detector for evaluation of its performance and functionality. The prototype includes the HL-LHC electronics and the remote HV control and the current-style data-taking scheme, calibration and monitoring systems.
  - The 3-in-1 FEB is a predecessor of the FENICS including analog trigger output for the present ATLAS trigger system.
  - The Tile PPr demonstrator (1/8 of the full-size HL-LHC PPr) provides data to the current DAQ (ROD) and transmits triggered events to the FELIX.
- The prototype will take data during Long Shutdown 2 (till 2020) and will be evaluated for Run 3.
- The main elements are about to enter pre-production. All on- and off-detector TileCal electronics will be replaced in 2024-2026 for the HL-LHC era.

References: `https://twiki.cern.ch/twiki/bin/view/AtlasPublic/...` ApprovedPlotsTileElectronics ApprovedPlotsTileUpgrades ApprovedPlotsTileTestBeamResults