Beam Gas Vertex: Beam profile measurements for the HL-LHC era

A. Alexopoulos on behalf of the BGV team

June 5, 2018, Split, Croatia

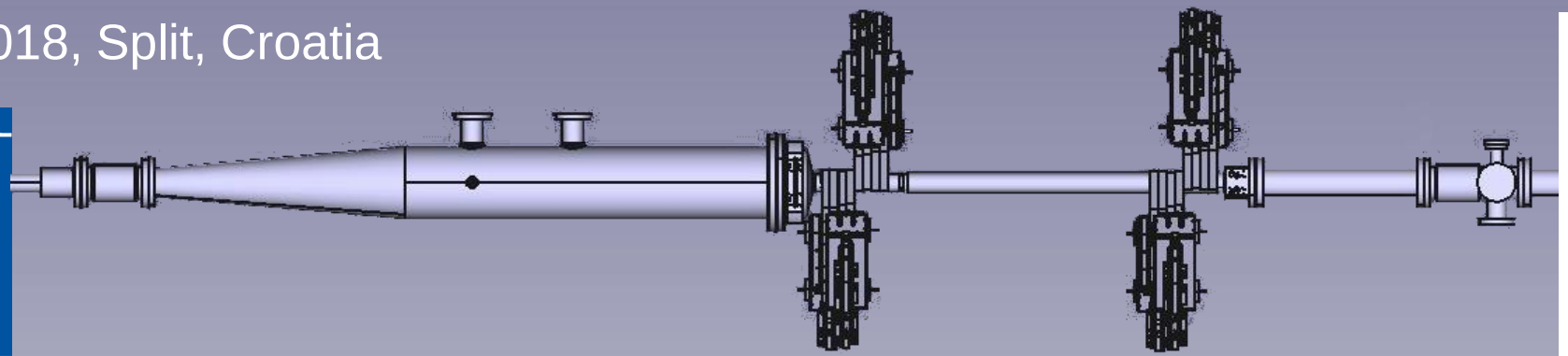

Research supported by the High Luminosity LHC project

The BGV team

A. Alexopoulos, C. Barschel, E. Bravin, G. Bregliozzi, N. Chritin, B. Dehning, M. Ferro-Luzzi, M. Giovannozzi, R. Jacobsson, L. K. Jensen, O. Rhodri Jones, V. Kain, R. Matev, M. Rihl, V. Salustino Guimaraes, R. Veness, S. Vlachos, B. Würkner

A. Bay, F. Blanc, S. Giani, O. Girard, G. Haefeli, P. Hopchev, A. Kuonen, T. Nakada, O. Schneider, M. Tobin, Q. Veyrat, Z. Xu

R. Greim, W. Karpinski, T. Kirn, S. Schael, A. Schultz von Dratzig, G. Schwering, M. Wlochal

…and significant support by LHCb collaboration & BE-BI community

Outline

- Beam Instrumentation
- The BGV Demonstrator
  - Detector Design
  - Readout System
- BGV Data Analysis
  - Analysis Method
  - Results from LHC

Beam Instrumentation

Beam Diagnostics: position, size, loss, tune…

Beam Size

- A beam is made of many particles each moving with given velocity
- Most of the velocity vector is parallel to the direction of the beam(s)
- Small transverse component

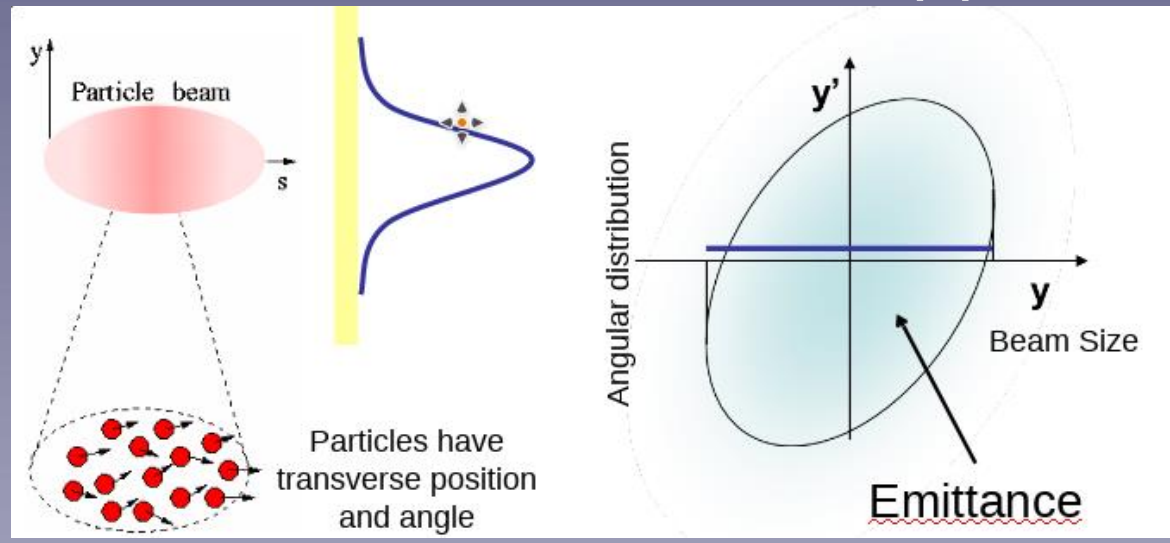

Dr. Rhodri Jones

Beam Size Measurements @LHC

Wire Scanner

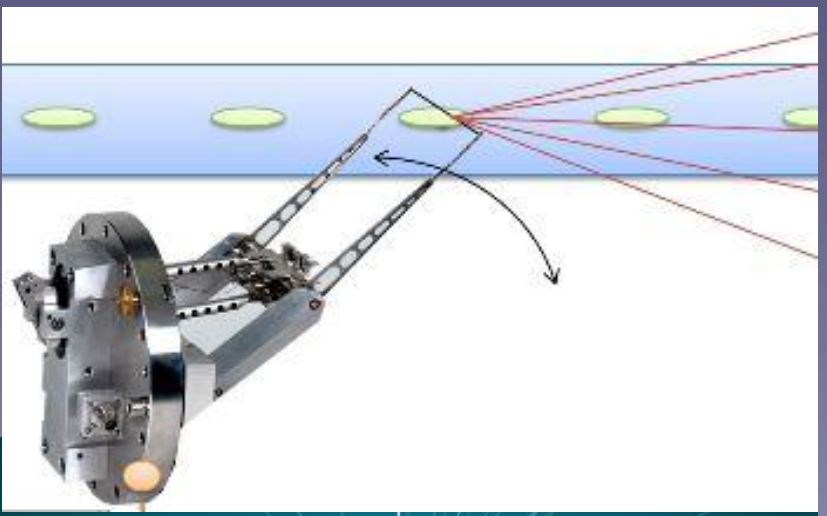

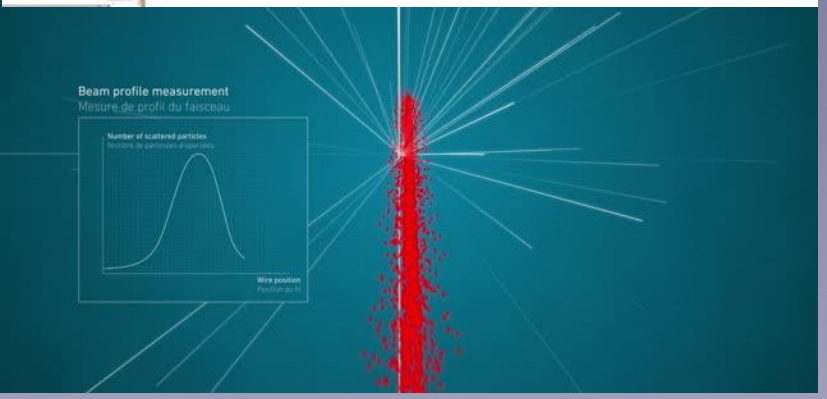

Beam Synchrotron Radiation Telescope (BSRT)

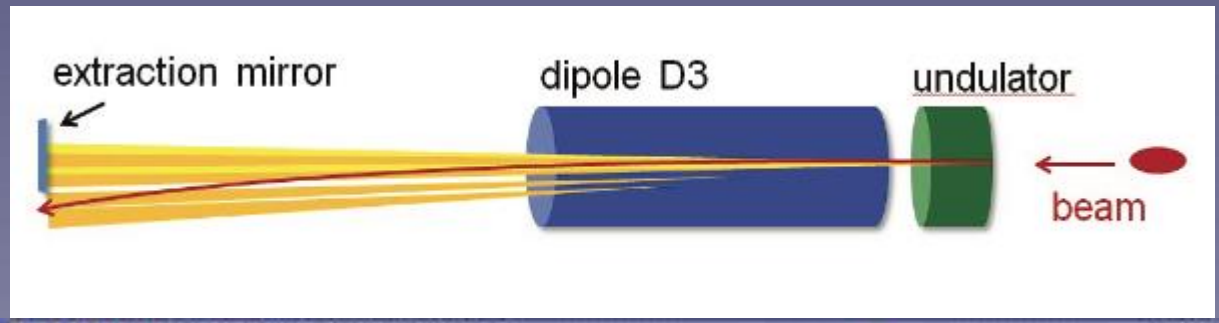

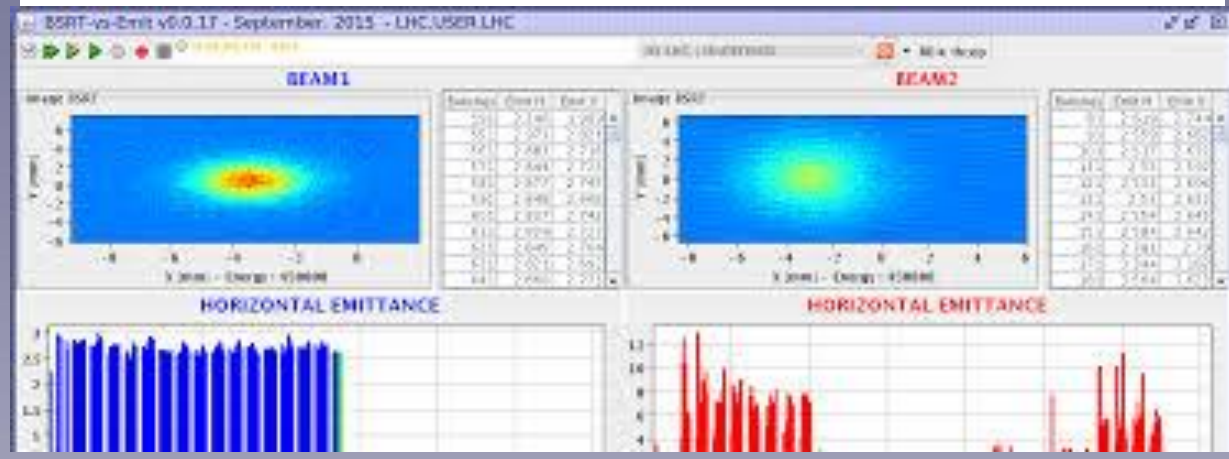

The BGV Demonstrator

A small physics experiment to measure beam size

- Based on the tracks created by beam-gas interactions
- Independent of accelerator intensity or energy
- Non-destructive

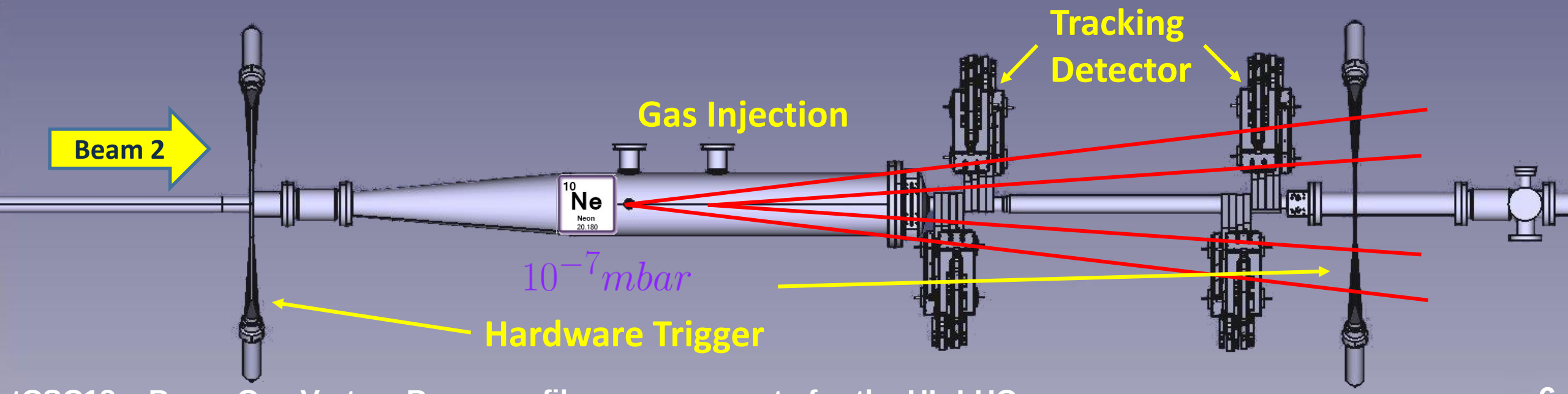

The BGV Demonstrator

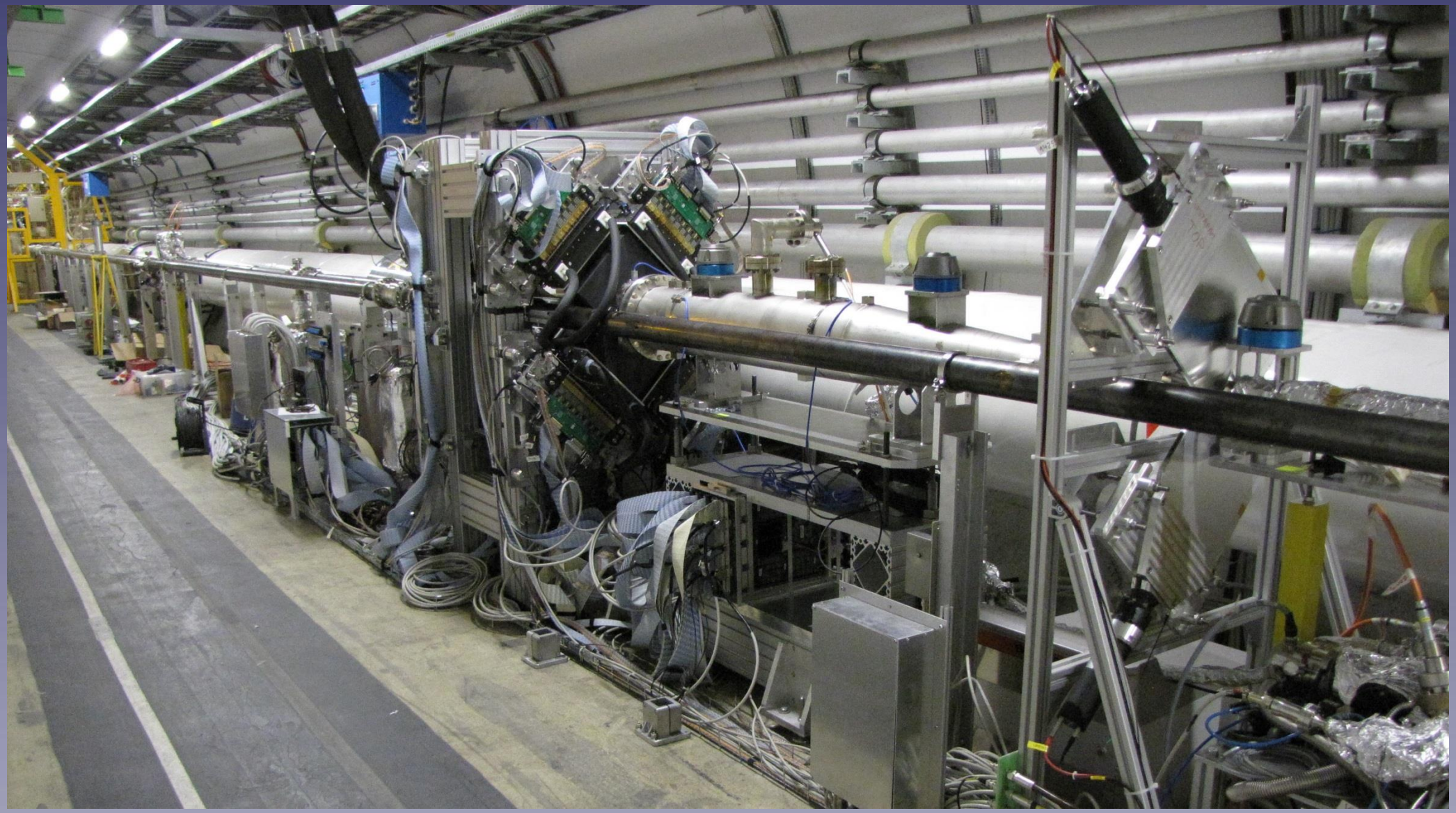

Detector Design

- Tracking Detector
  - Consists of 2 stations (‘near’ and ‘far’)
  - 4 scintillating fiber (SciFi) modules per station
    - Each pair of modules is perpendicularly placed
    - Module read out by 16 Silicon Photo Multipliers (SiPMs) of 128 channels each

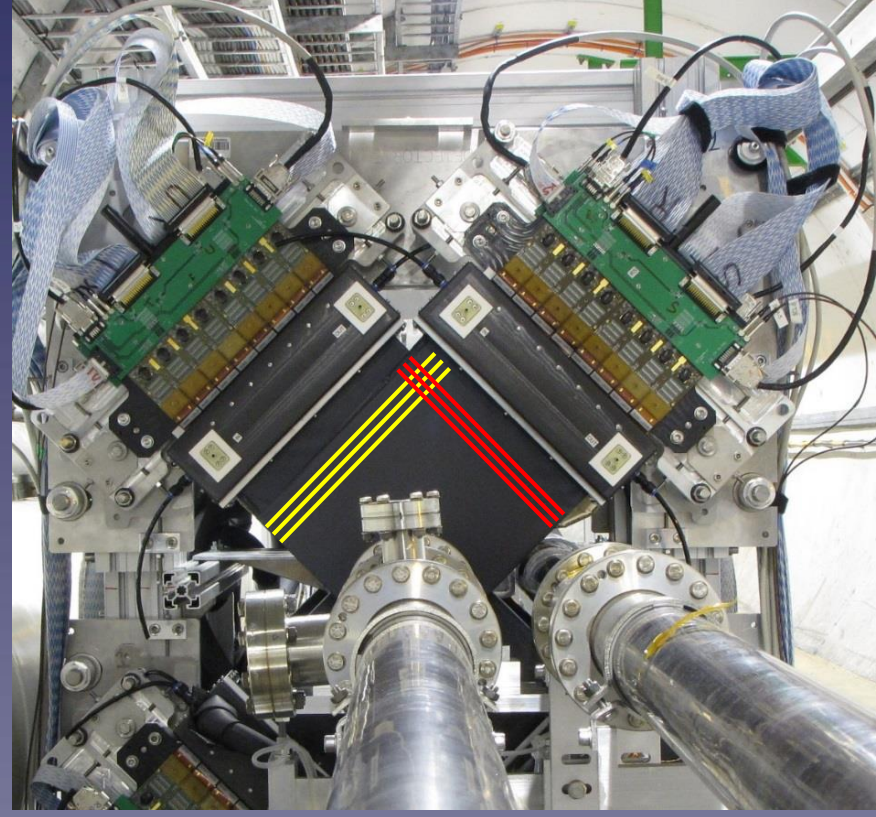

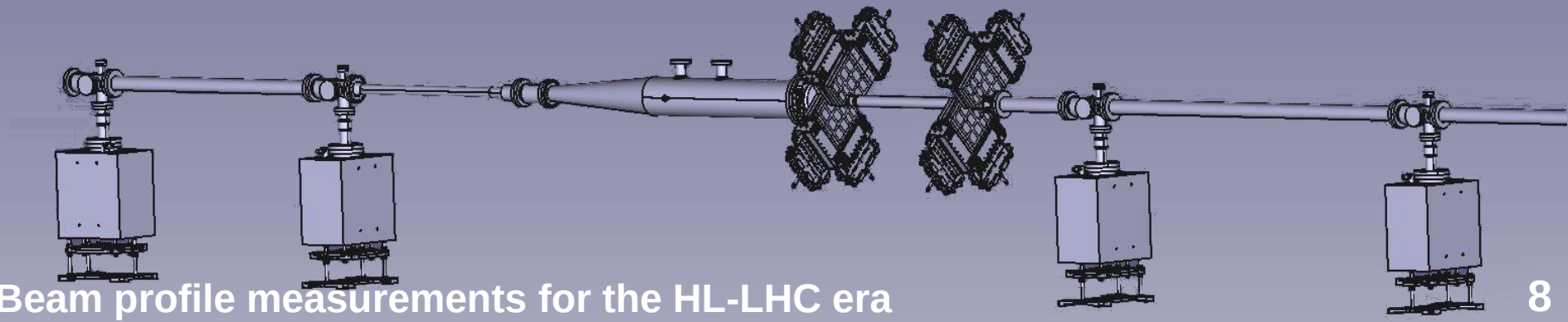

Detector Design

- Tracking Detector
  - Photons are generated in the fibers & detected by several pixels of the SiPM
  - The signal of each channel is the sum of all fired pixels within the channel
  - The crossing point is calculated as a weighted mean of the cluster's channels

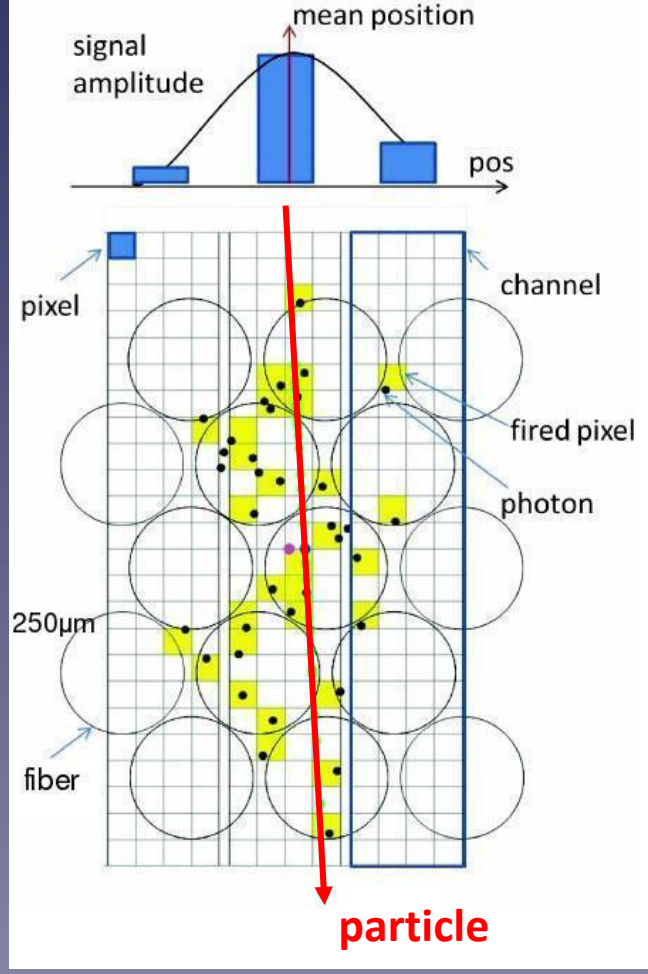

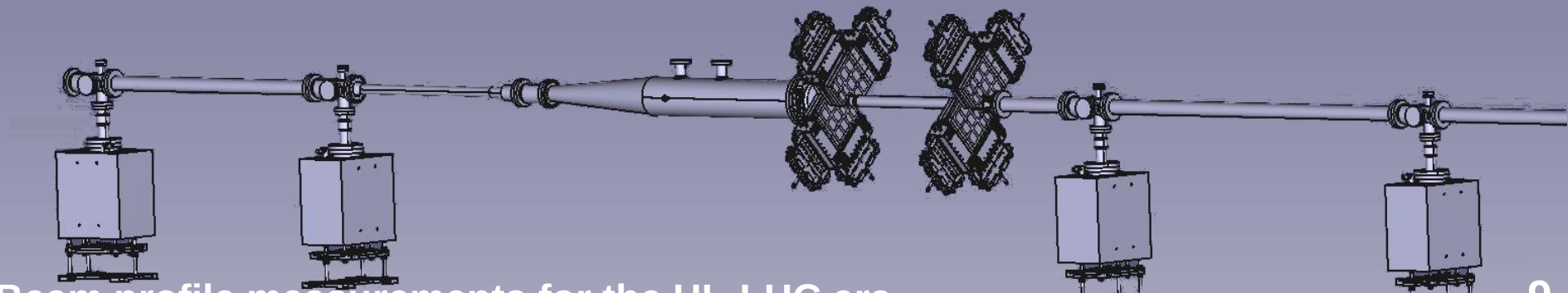

Detector Design

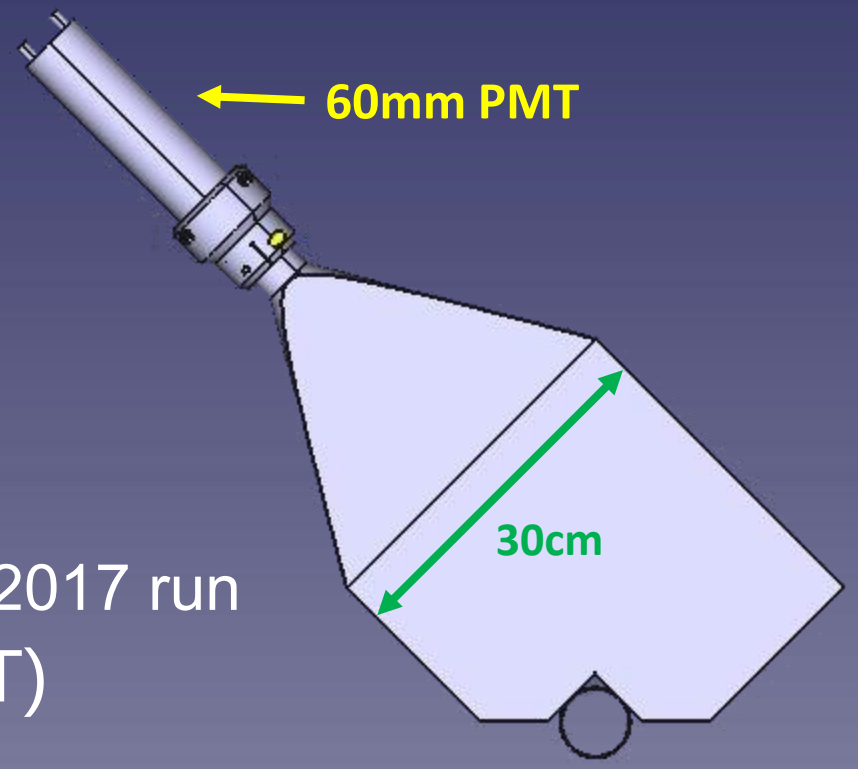

- Hardware Trigger
  - Based on scintillator plates
  - Three stations, ‘veto’, ‘signal’, ‘confirm’
    - ‘confirm’ station to be commissioned during LHC 2017 run
  - Read out through Photomultiplier Tubes (PMT)
  - Combination of all signals is used as trigger

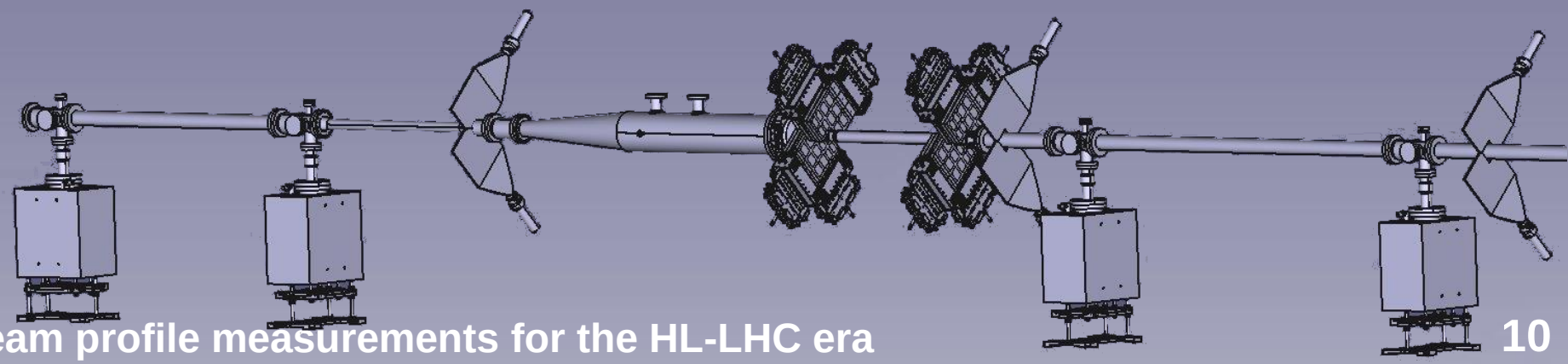

Detector Design

Hardware Trigger

Several measurement opportunities

- Rate → beam-gas interactions
- Rate / Bunch slot → Intensity
- Measuring with/without gas
  - Ghost charges in empty bins

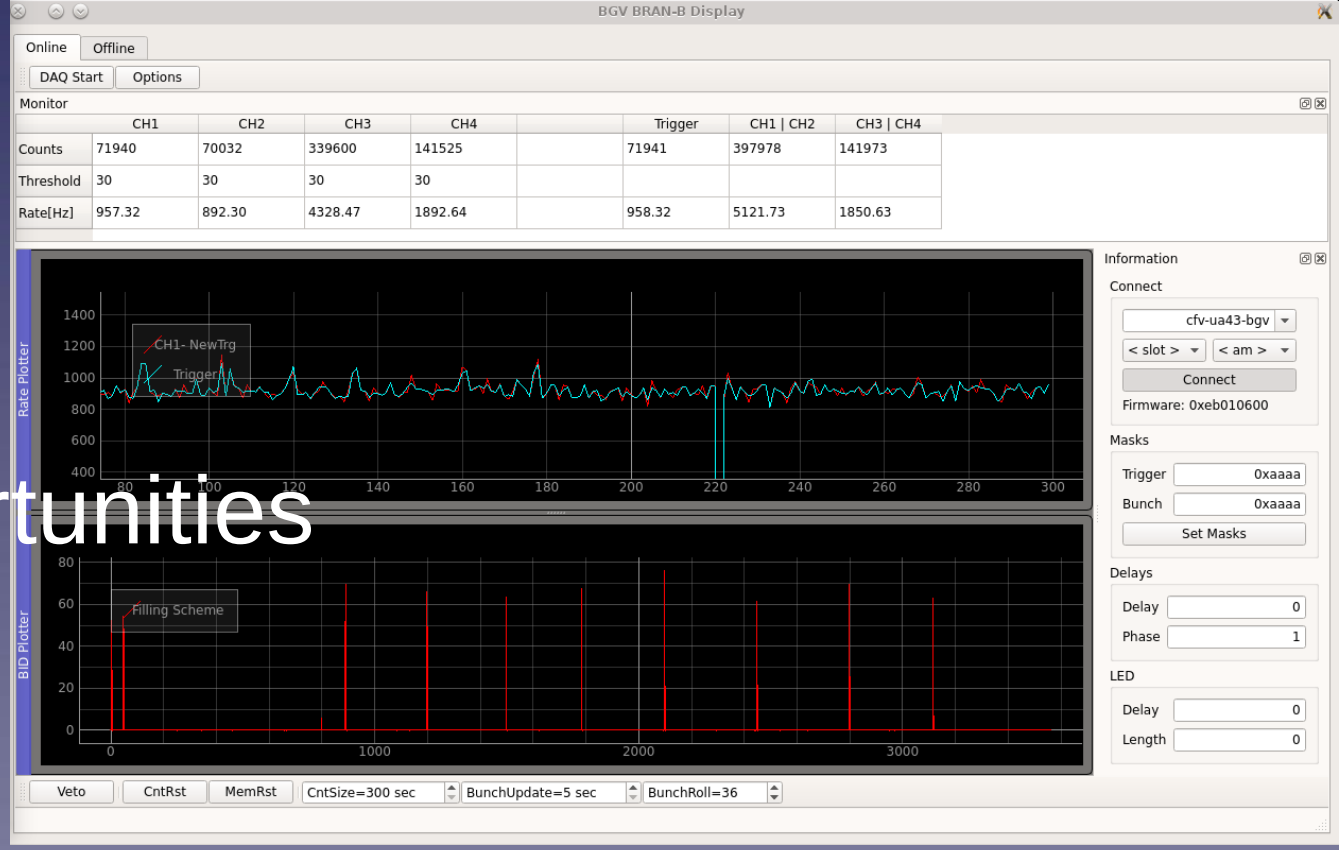

MVC pattern for GUIs

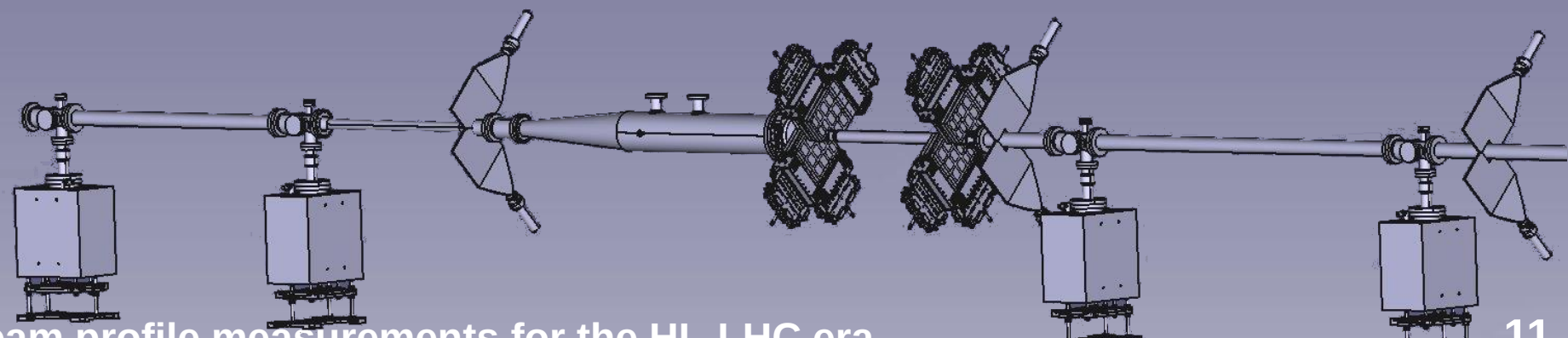

Readout System

LHC Tunnel

Hardware Trigger

Analog Front-End

[40MHz]

60m

LHC Alcove

Digitization

- Data corrections
- Zero-suppression
- Cluster recognition

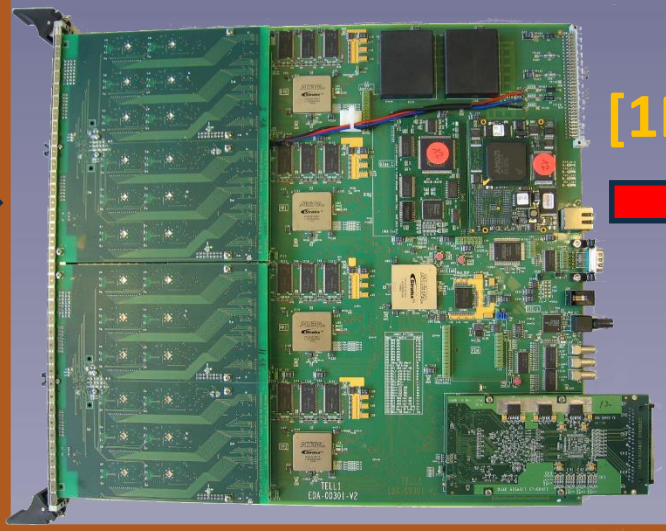

[1MHz]

CPU Farm

- Track reconstruction
- Vertex localization
- Beam size determination

High Level Trigger

L0 Trigger — ~500 kHz

ADC FPGAs - Clusters

HLT Nodes

Filtering [clusters]
Tracking
Filtering [tracks]
Sender

~18 kHz

~1.0 kHz

+ 5 servers
+ 3 Ivy Bridge & 2 Broadwell
+ 2 sockets
+ 10 or 6 cores per socket
+ 2 Thread per core

CTRL Machine

Aggregation-Histogram Fill-Result

2' for beam size value

Analysis Method

- Impact parameter d_{xy}
  - Distance of closest approach of reconstructed tracks to the z-axis
- Azimuthal angle ϕ
  - Angle between the x-y projection of the track & the x-axis

Use tracks & impact parameter correlations to measure beam position and size

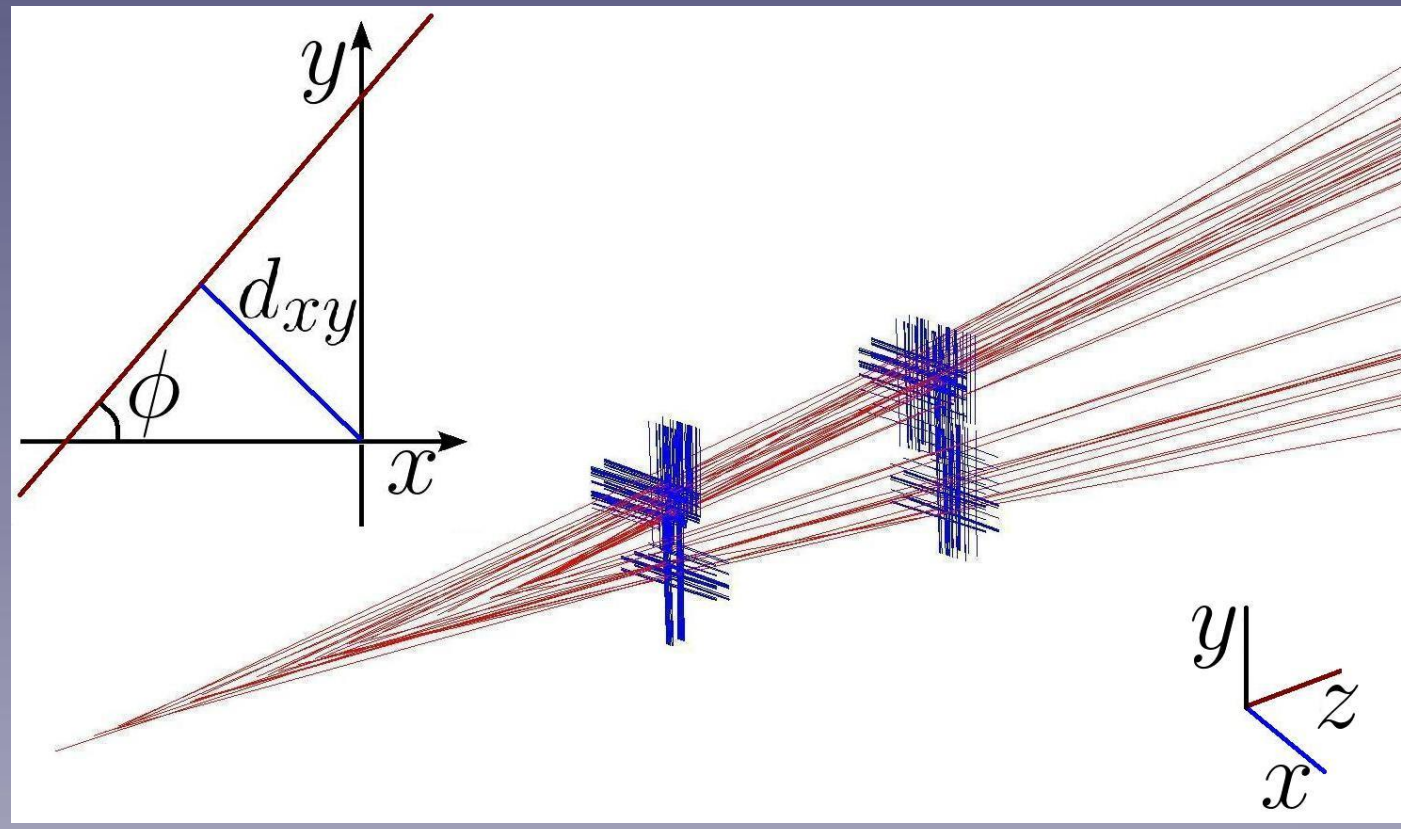

Analysis Method

- Beam Size
  - Using the impact parameter correlation of tracks produced by a beam-gas interaction the beam size is measured as:

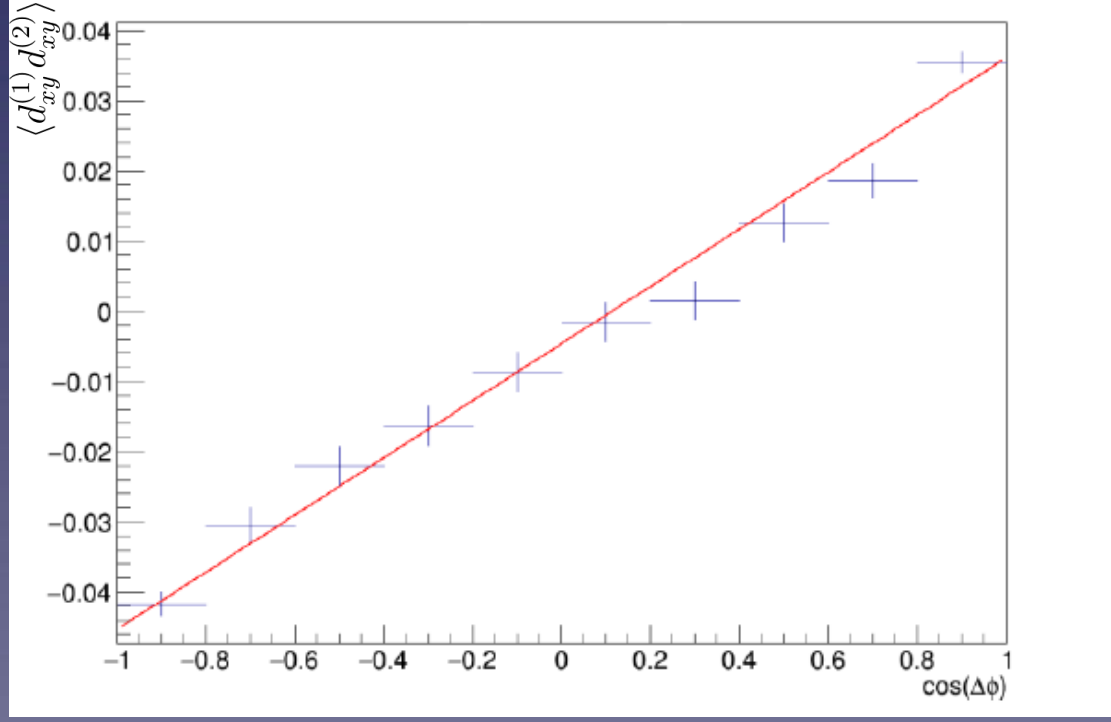

$$\langle d_{xy}^{(1)} d_{xy}^{(2)} \rangle = \frac{\sigma_x^2 + \sigma_y^2}{2} \cos\left(\phi_1 - \phi_2\right) - \frac{\sigma_x^2 - \sigma_y^2}{2} \cos\left(\phi_1 + \phi_2\right)$$

Results from LHC

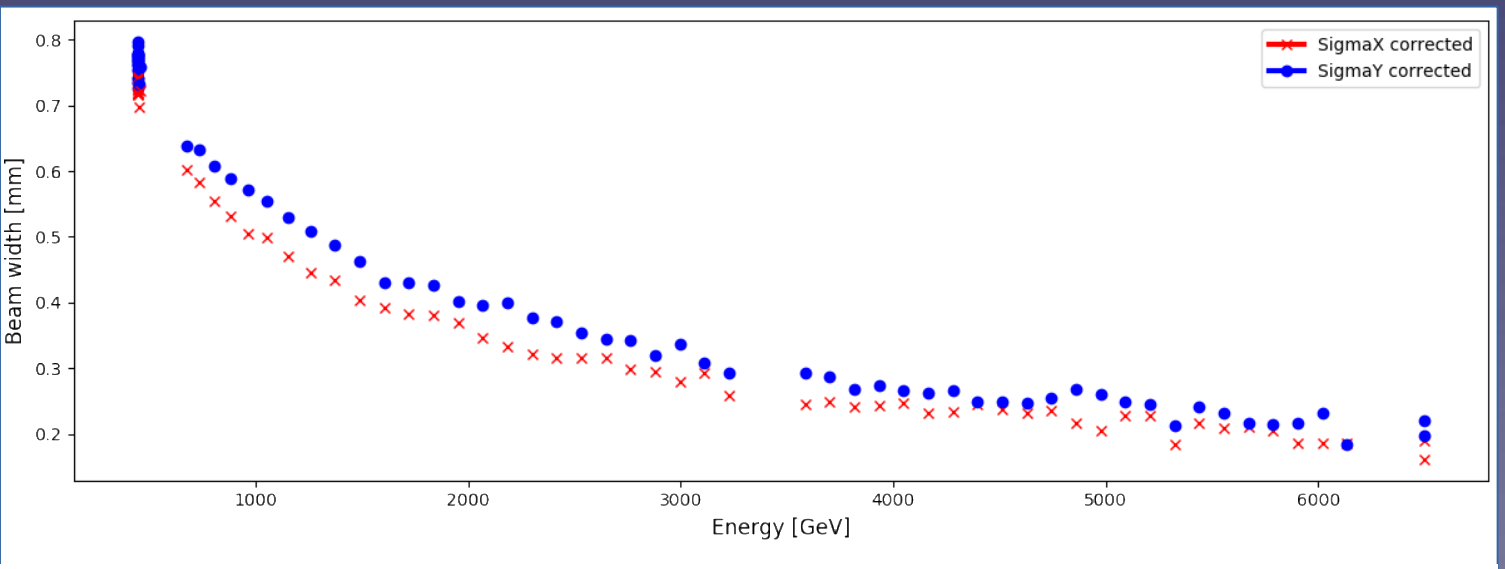

Beam size during beam energy ramp

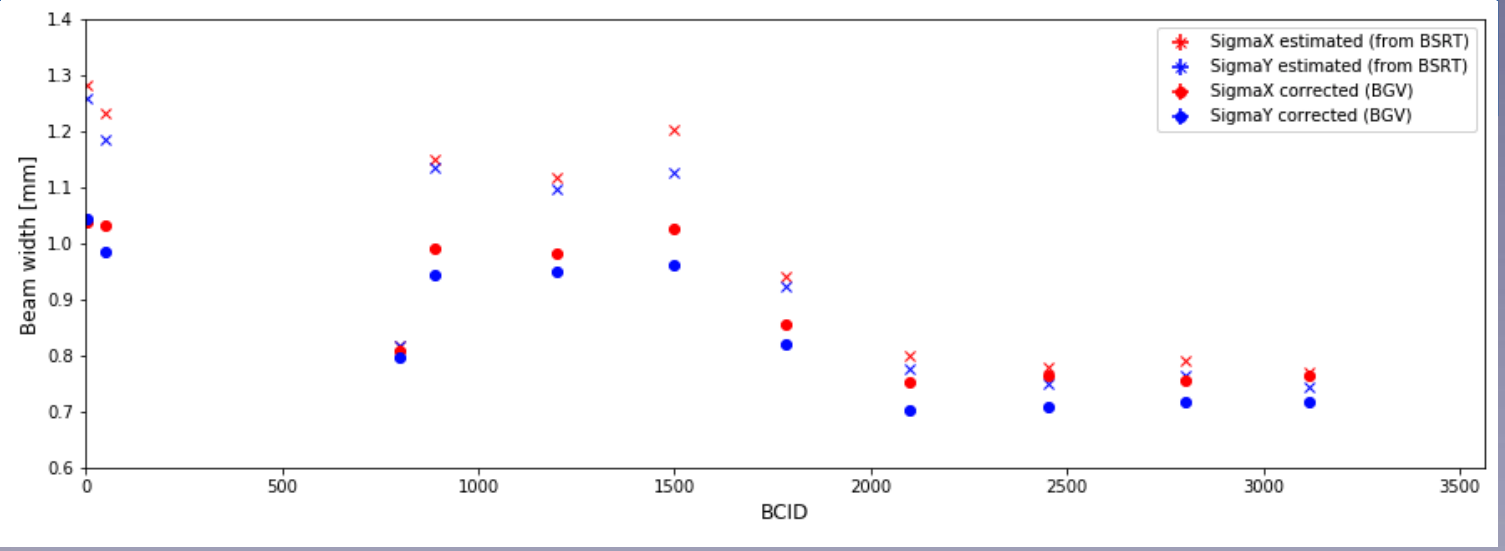

Beam size per bunch ID

Summary & Outlook

- The BGV Demostrator has proven its potential during 2017 LHC run
- Several enhancements for this year
  - L0 Trigger upgrade
  - Online processing and sending of data to the CCC
  - Make best use of Machine development runs (MDs)
  - Comparison with other instruments
- Challenges ahead !

Backup Slides

Detector Design

- Gas Target
  - Pressure bump up to 10^{-7} mbar instead of 10^{-10} mbar
  - Adjustment of the trigger rate

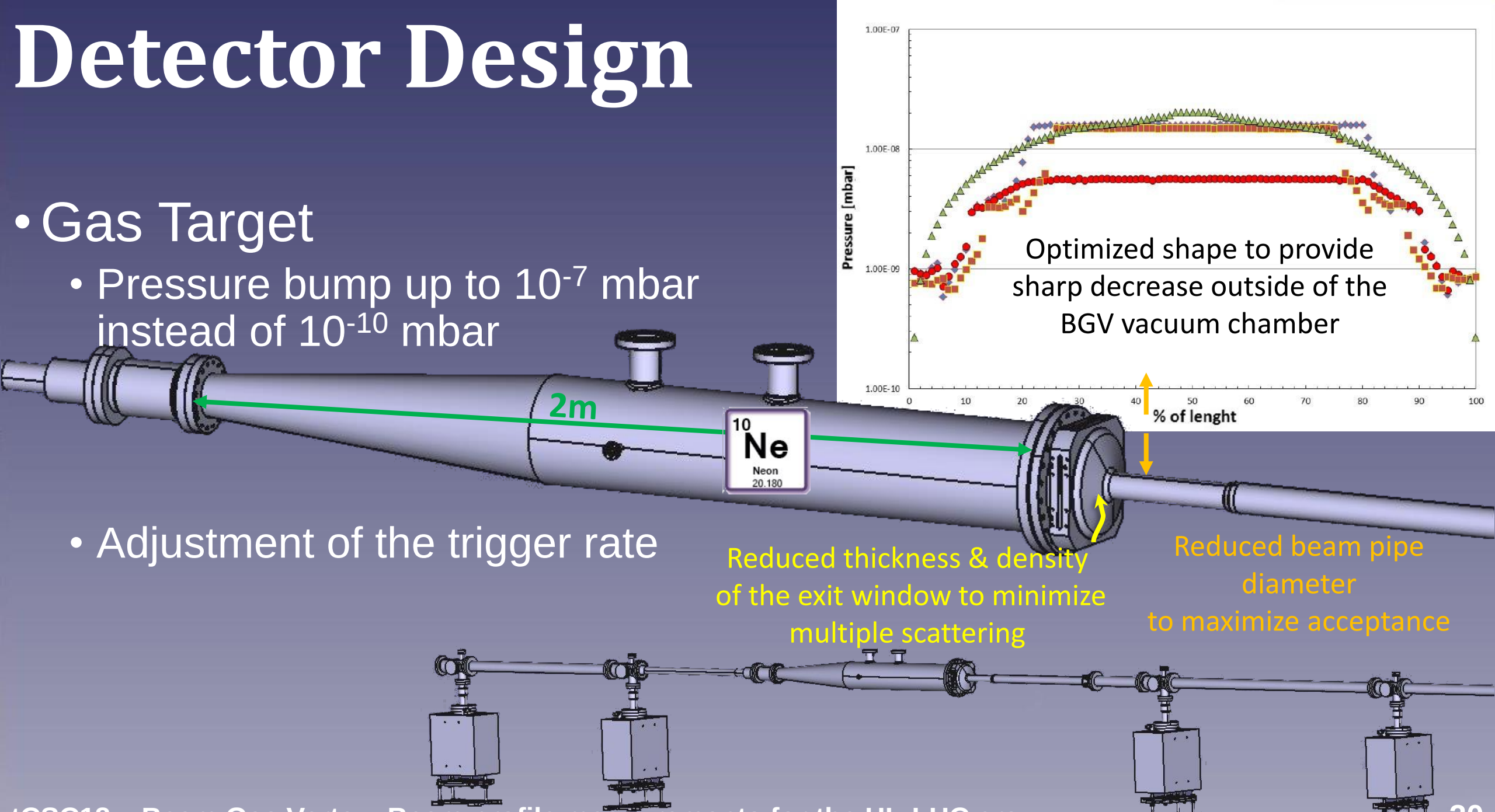

Detector Design

- Tracking Detector
  - Tracks are reconstructed provided that a valid cluster is detected on each layer