Anatomy of a patent vs a scientific publication

Knowledge Transfer Group

Exercise

Compare these 2 documents

http://bit.ly/2kLQwMF http://bit.ly/2ggZK1U

What are the similar features?

What are the main differences?

Anatomy of patents… main features

Feature		Patent		Research publication
TITLE?	✓		✓	
AUTHORS?	✓	INVENTOR(S), APPLICANT(S), ASSIGNEE(S)	✓	RESEARCHER(S)
ABSTRACT?	✓		✓	
INTRODUCTION?	✓	(BACKGROUND)	✓	
DESCRIPTION?	✓	SUMMARY, DETAILED DESCRIPTION	✓	METHODS, RESULTS, CONCLUSION
DRAWINGS / FIGURES?	✓	INCLUDING DETAILED DESCRIPTION	✓	INCLUDING DETAILED DESCRIPTION AND/OR CAPTION
INDUSTRIAL USES?	✓	YES, ALWAYS	✓✗	NOT NECESSARILY, BUT INCREASING IMPORTANCE (IMPACT)
CLAIMS?	✓	YES, ALWAYS	✗	
REFERENCES/CITATIONS?	☺	YES, BUT SOMETIMES NOT FOUND IN THE TEXT BODY	✓	YES, ALWAYS

Anatomy of patents… bibliographic data

- Title
- Abstract
- Inventor, applicant
- Identifiers:
  - Publication number
  - Application number
  - Priority number
- Dates:
  - Publication date
  - Filing date
  - Priority date
- Geographical coverage
- Classification Information

(19) Europäisches Patentamt / European Patent Office / Office européen des brevets

(11) EP 3 024 306 A1

(12) EUROPEAN PATENT APPLICATION

(43) Date of publication:
25.05.2016 Bulletin 2016/21

(51) Int Cl.:
H05H 13/00 (2006.01)

(21) Application number: 15192905.6

(22) Date of filing: 04.11.2015

(84) Designated Contracting States:
AL AT BE BG CH CY CZ DE DK EE ES FI FR GB GR HR HU IE IS IT LI LT LU LV MC MK MT NL NO PL PT RO RS SE SI SK SM TR
Designated Extension States:
BA ME
Designated Validation States:
MA MD

(30) Priority: 19.11.2014 EP 14193792

(71) Applicant: ION BEAM APPLICATIONS S.A.
1348 Louvain-la-Neuve (BE)

(72) Inventors:
- FORTON, Eric
  1457 Nil-Pierreux (BE)
- KLEEVEN, Willem
  3212 Pellenberg (BE)

(74) Representative: Pecher, Nicolas et al
Abyoo sprl
Centre Monnet
Avenue Jean Monnet, 1
1348 Louvain-la-Neuve (BE)

Anatomy of patents… language

PATENT

1. A compact radio-frequency quadrupole 'RFQ' accelerator for accelerating charged particles, the RFQ accelerator comprising:

a bunching section configured to have a narrow radio-frequency 'rf' acceptance such that only a portion of a particle beam incident on the bunching section is captured, and wherein the bunching section bunches the portion of the particle beam;

an accelerating section for accelerating the bunched portion of the particle beam to an output energy; and,

a means for supplying radio-frequency power

2. The RFQ accelerator of claim **1**, wherein the bunching section is further configured to rapidly increase the synchronous phase of the particle beam incident of the bunching section.

3. The RFQ accelerator of claim **1**, wherein the narrow rf acceptance is caused by the input of the bunching section having a synchronous phase of greater than −50 degrees, preferably greater than −40 degrees, and more preferably −30 degrees.

RESEARCH PUBLICATION

A. The low beta section accelerators

With the 750 MHz RFQ as a starting point, the authors investigated the best solution to be placed afterwards, in the 5 to 70 MeV/u range. The rf design of this section was mostly driven by the optimization of the ZTT, together with machinability and thermal constraints. Breakdown (BD) limitations are not an issue here, since as previously discussed the accelerating gradient of this section is relatively low.

Different types of cavities, both TE and TM modes, were considered, at two operating frequencies, 750 MHz and 3 GHz. A simplified geometry was considered, with constant drift tube thickness and stems radius independently on the geometric β. All the structures were studied by optimizing the cell gap at different geometric βs, from 5 to 70 MeV/u. The bore aperture radius chosen was 2.5 mm, from preliminary beam dynamics considerations. The result of this study is shown in Fig. 3.

Anatomy of patents… language

PATENT

1. A compact radio-frequency quadrupole 'RFQ' accelerator for accelerating charged particles, the RFQ accelerator comprising:

a bunching section configured to have a narrow radio-frequency 'rf' acceptance such that only a portion of a particle beam incident on the bunching section is captured, and wherein the bunching section bunches the portion of the particle beam;

an accelerating section for accelerating the bunched portion of the particle beam to an output energy; and,

a means for supplying radio-frequency power

2. The RFQ accelerator of claim **1**, wherein the bunching section is further configured to rapidly increase the synchronous phase of the particle beam incident of the bunching section.

3. The RFQ accelerator of claim **1**, wherein the narrow rf acceptance is caused by the input of the bunching section having a synchronous phase of greater than −50 degrees, preferably greater than −40 degrees, and more preferably −30 degrees.

- Descriptive
- Focused on the invention
- Unambiguous
- Non-conversational
- Unintelligible?

Patent: US19860948095

Some other examples…

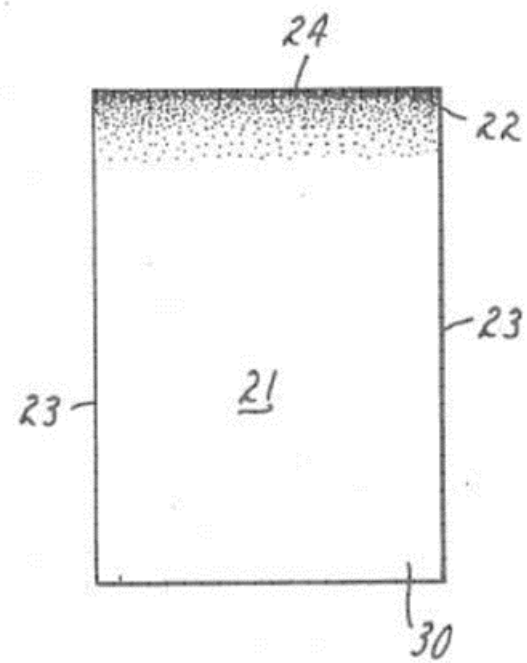

Abstract

Pressure-sensitive adhesive sheet material having the ability to be applied to paper and removed therefrom without lifting fibers or delaminating the paper. The otherwise conventional pressure-sensitive adhesive is applied to the backing by spraying, resulting in a non-repetitive pattern of adhesive islands.

Claim 1

A method of making a removable and repositionable adhesive sheet product comprising spraying onto a sheet backing material a solution or dispersion of a normally tacky and pressure-sensitive adhesive in a liquid carrier and thereafter evaporating the liquid carrier, leaving a non-repetitive discontinuous pattern of spaced islands of adhesive, the pressure-sensitive adhesive being sufficiently adherent that, if sheet material having a continuous coating of said adhesive is applied to newsprint, it cannot be peeled away at normal removal rates without tearing or delaminating said newsprint, the adhesive islands being on the order of 0.01 to 0.15 millimeter thick, having at least one other dimension no greater than 0.02-1.5 millimeters, and occupying from about 10-85% of the area over which adhesive is applied, so as to achieve an adhesion to polyester film on the order of 8-80 grams per centimeter width, whereby said adhesive product can be adhered to newsprint, allowed to remain in contact therewith for two weeks at room temperature and then removed without visibly damaging the newsprint.

Some other examples…

Abstract

A hand-held electronic game machine for use with attachable/detachable memory game packs wherein the game machine includes a case of a size which may be held by a hand and capable of being sandwiched by both hands with a first switch disposed at a position such that during a game it can be operated by one thumb on a front surface of the case, a second switch disposed at a position such that during a game it can be operated by the other thumb on the first surface of the case and a third operation switch means provided in a region of said front surface where imaginary loci of both thumbs intersect with each other on the front surface, and wherein the game machine can be connected with others for simultaneous multiple player competition.

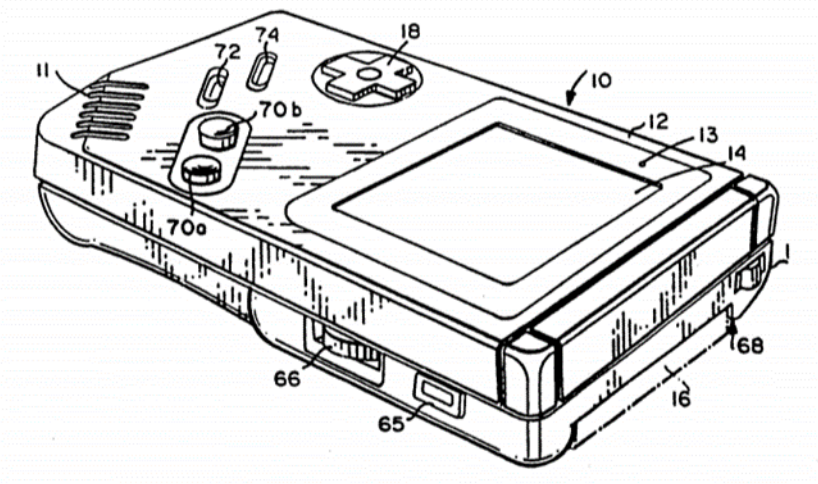

Claim 1

A hand-held electronic game machine, comprising: a case of a size which may be held by hand and having a subsonically rectangularly shape defined by a front surface, a rear surface, two latitudinal side surfaces, a lower side surface and an upper side surface, each of said two longitudinal side surfaces being of greater length than each of said lower side surface and said upper side surface, said case being sandwiched by both hands during game play, said front surface having an upper front surface portion bounded by an upper portion of each of said longitudinal side surfaces and a lower front surfaced portion bounded by a lower portion of each of said longitudinal side surfaces; a first operation switch disposed on a right portion of said lower front surface portion of said case such that during game play it can be operated by a thumb of a player's right hand sandwiching said case; a second operation switch disposed on a left portion of said lower front surface portion of said case such that during game play it can be operated by a thumb of a player's left hand sandwiching said case; a dot-matrix liquid crystal display panel including a display screen defining a matrix of rows and columns of dots disposed on said upper front surface portion such that in use said display shown is positioned above said first operation switch and said second operation switch; an insertion portion formed on said upper side surface of said case and extending, in use, behind said dot-matrix liquid crystal display panel in said case; an external memory attachably and detachably insertable into said insertion portion from said upper side surface of said case for storing a game program and background character data and moving object character data with which images for a game are displayed on said display screen; game processing means housed in said case for reading said game program and said background character data and moving object character data from said external memory and controlling the display of moving objects on said display screen in response to the actuation of said first operation switch and said second operation switch and for controlling the display of background characters on said display screen; a connector housed in said case for connecting said external memory being inserted in said insertion portion to said game processing means; a memory housed in said case and associated with said game processing means for storing said background character data and said moving object character data read from said external memory by said game processing means and transferred through said connector; display signal generating means housed in said case for generating display signals for displaying background characters and moving objects on the basis of said background character data and said moving object character data stored in said memory; a driver for driving said dot-matrix liquid crystal display panel in response to said display signals generated by said display signal generating means to display said background characters and said moving objects on said display screen, said driver including a first driver for driving said dot-matrix liquid crystal display panel in columns and a second driver for driving said liquid crystal display panel in rows.

Sufficiency of disclosure

The European patent application shall disclose the invention in a manner sufficiently clear and complete for it to be carried out by a person skilled in the art.

Therefore, you will always find:

- All the essential features for carrying out the invention.
- At least one example (embodiment) of a working implementation of the invention.

Would this patent be granted?

A mass energy balancing of balancing everything in bounding sources and sinks of mass and energy is paths-of-passage (PP) of quantum in and from sources into and in sinks of mass energy having quantal mass and quantum PP lengths, spawning the PP lengths least sum (PPLLS) that is cosmological nullity. A mass energy highest conserving (MEHC) of flowing fluids affirms all of cosmological nullities of the nullity and ultimate longevities of conforming quanta and balancing everything to fluxing dispositions of a boundaries perfection. Environment energy superimposed dynamics (EESD) unbalance the boundaries perfection of balancing everything. The sources and sinks also affect the ultimate longevities of the flowing fluids, conforming quanta and boundaries perfection, the PPLLS and MEHC of Fluid Elements, constituting genus of everything, genera of everything, the boundaries perfection of Advanced Fluid Elements, Advanced Processors and the Earth's gravitational magnetic field, Advanced Processor. All of it constitutes science.

(19) **United States**

(12) **Patent Application Publication**

Petrovich

(10) **Pub. No.: US 2015/0316083 A1**

(43) **Pub. Date: Nov. 5, 2015**

(54) **GOD'S PRESENCE**

(71) Applicant: **Svetozar B. Petrovich**, Chicago, IL (US)

(72) Inventor: **Svetozar B. Petrovich**, Chicago, IL (US)

(21) Appl. No.: **13/999,105**

(22) Filed: **Jan. 13, 2014**

Jul. 11, 2012, which is a continuation-in-part of application No. 13/506,098, filed on Mar. 27, 2012, now abandoned, which is a continuation-in-part of application No. 13/136,140, filed on Jul. 25, 2011, now abandoned, which is a continuation-in-part of application No. 13/068,587, filed on May 16, 2011, now abandoned, which is a continuation-in-part of application No. 13/135,617, filed on Jul. 11, 2011, now aban-

Would this patent be granted?

A transportation facilitation device including: a circular rim; a bearing in which a hollow cylindrical member is rotatable about a rod situated within the hollow cylindrical member; and a series of connecting members connecting the circular rim with the hollow cylindrical member to maintain the circular rim and the hollow cylindrical member in substantially fixed relation; wherein the rod is positioned on an axis perpendicular to the plane of the circular rim, and substantially central of the circular rim.

(11) Application No. **AU 2001100012 A4**
(19) AUSTRALIAN PATENT OFFICE

(54) Title
Circular transportation facilitation device

(51) International Patent Classification(s)
B60B 001/00

(21) Application No: **2001100012** (22) Date of Filing: **2001.05.24**

(43) Publication Date: **2001.08.02**

(71) Applicant(s)
John Keogh

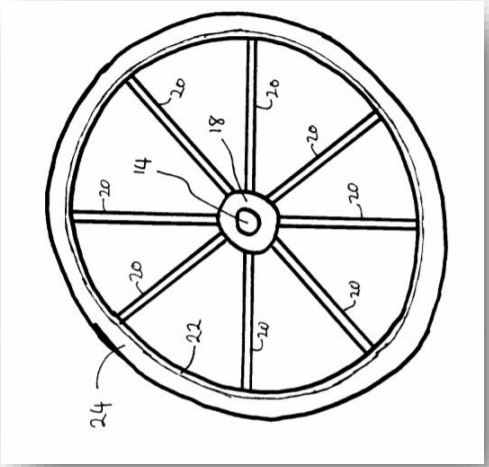

Questions?