Western Norway University of Applied Sciences

HELSE BERGEN
Haukeland University Hospital

University of Bergen

Forum on Tracking Detector Mechanics 2018

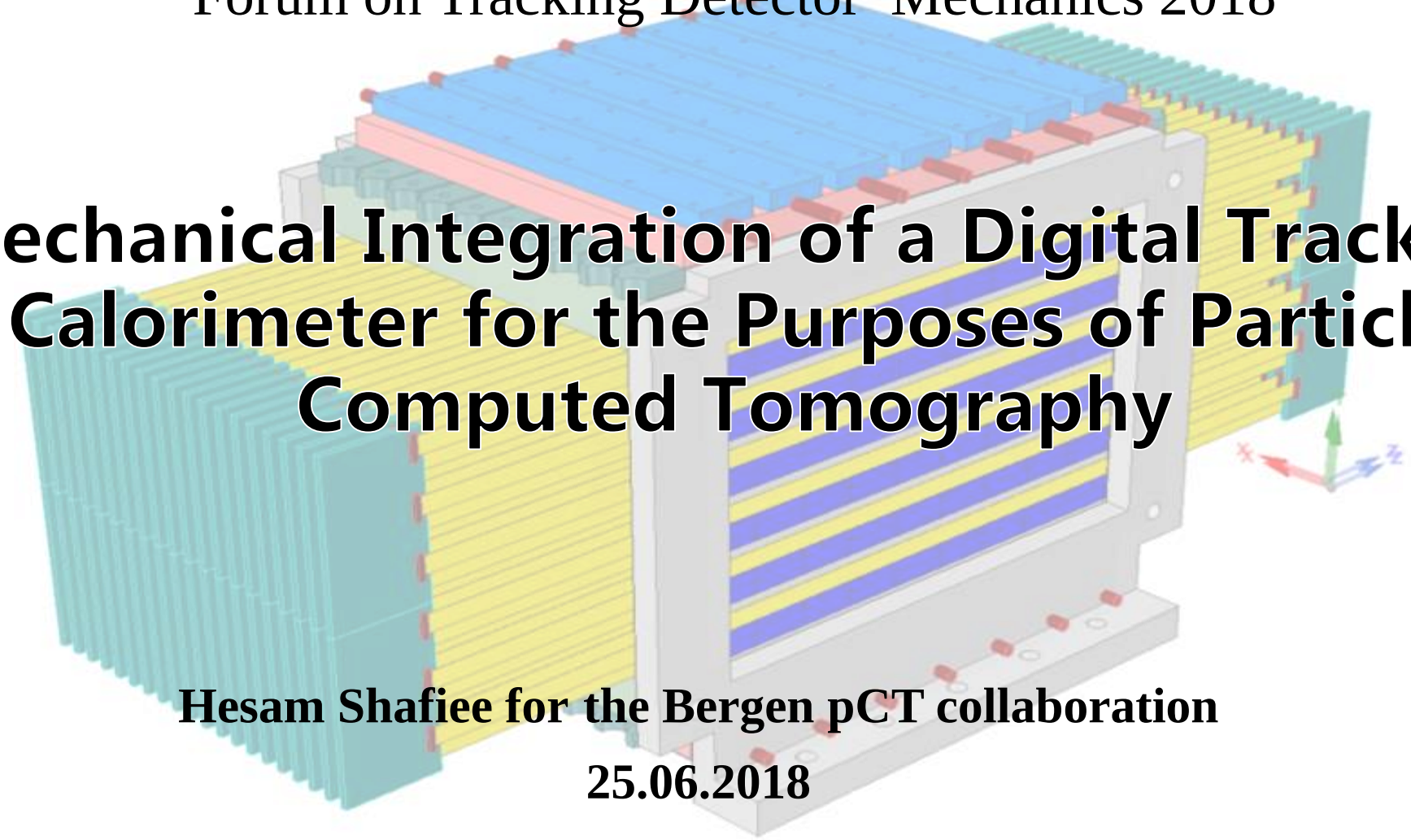

# Mechanical Integration of a Digital Tracking Calorimeter for the Purposes of Particle Computed Tomography

**Hesam Shafiee for the Bergen pCT collaboration**

**25.06.2018**

# Outlines:

- ✓ Introduction
- ✓ DTC Mechanical Package challenges (Design Parameters)
- ✓ Stave assembly considerations
- ✓ Creating sensitive area for particle trajectory (One Slab)
- ✓ Full calorimeter structure
- ✓ Simulation results
- ✓ Tracker plates (Front Layer) structure
- ✓ Future Studies

# Introduction:

- **Particle therapy:**
  - ✓ Novel method in cancer treatment; irradiation of cancerous tissue with protons and carbon ions
- **Why Proton CT**
  - ✓ Accuracy (Bragg peak)
  - ✓ Reducing uncertainties in Bragg peak location(from 1cm to < 1mm)
  - ✓ Direct measurement of stopping power instead of deriving it from a normal X-ray CT
  - ✓ Reduced dose to healthy tissue
  - ✓ Find proton energy after patient

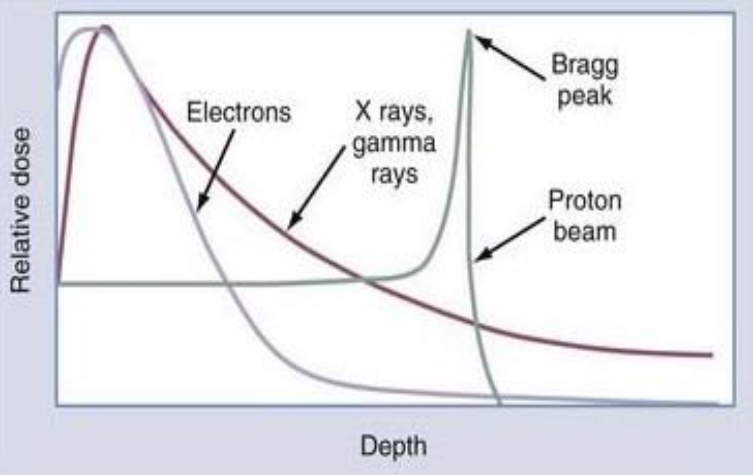


(PHYS231, Roehrich D, 2017)

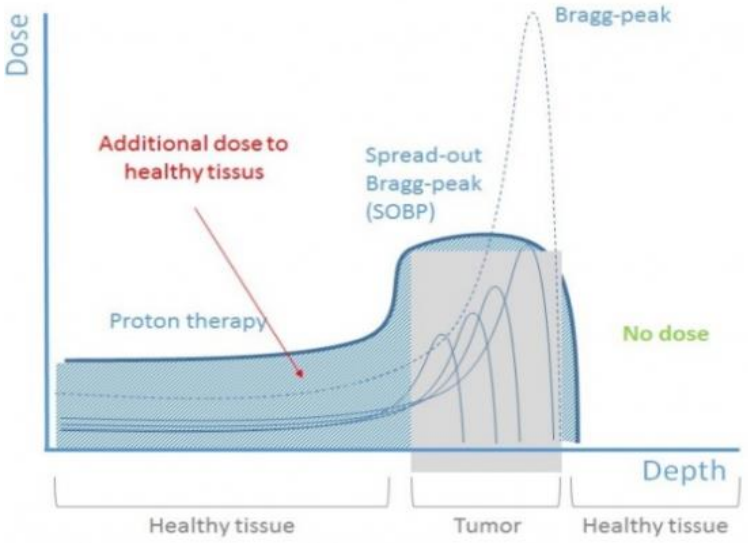


(PHYS231, Roehrich D, 2017)

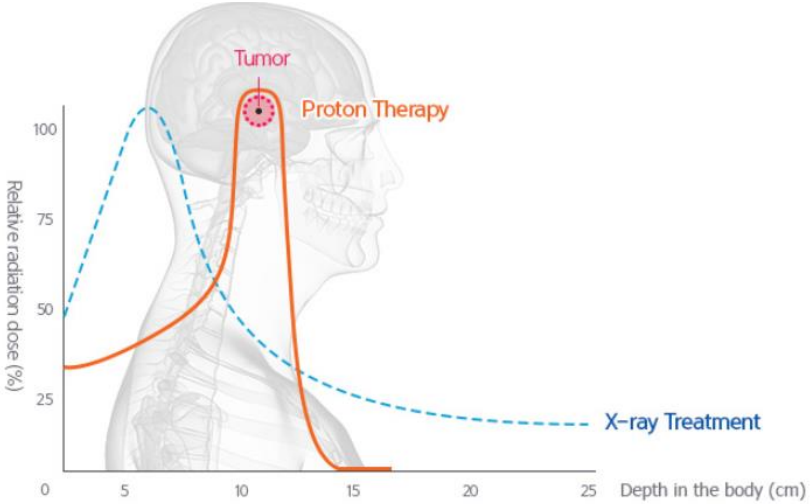


Samsung Medical Center
(http://www.samsunghospital.com)

# Introduction:

- **Proton imaging**
  - ✓ Tracking proton beams : tracking individual protons through the detector
    - ➡ Estimating path of individual protons
  - ✓ Proton CT 3D image reconstruction by:
    - ➡ Finding proton vectors before / after patient
    - ➡ Finding proton energy before / after patient
    - ➡ Energy loss calculation
    - ➡ Repeating for different projections (phantom or device)

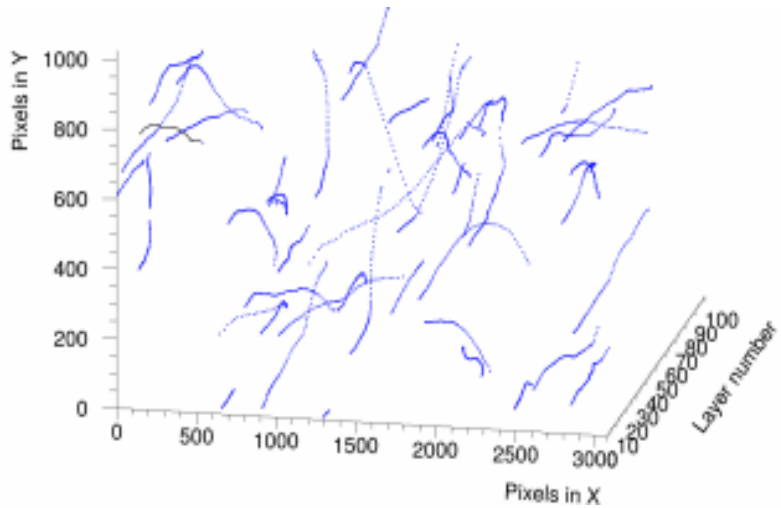


(Pettersen H.E.S., 2017)

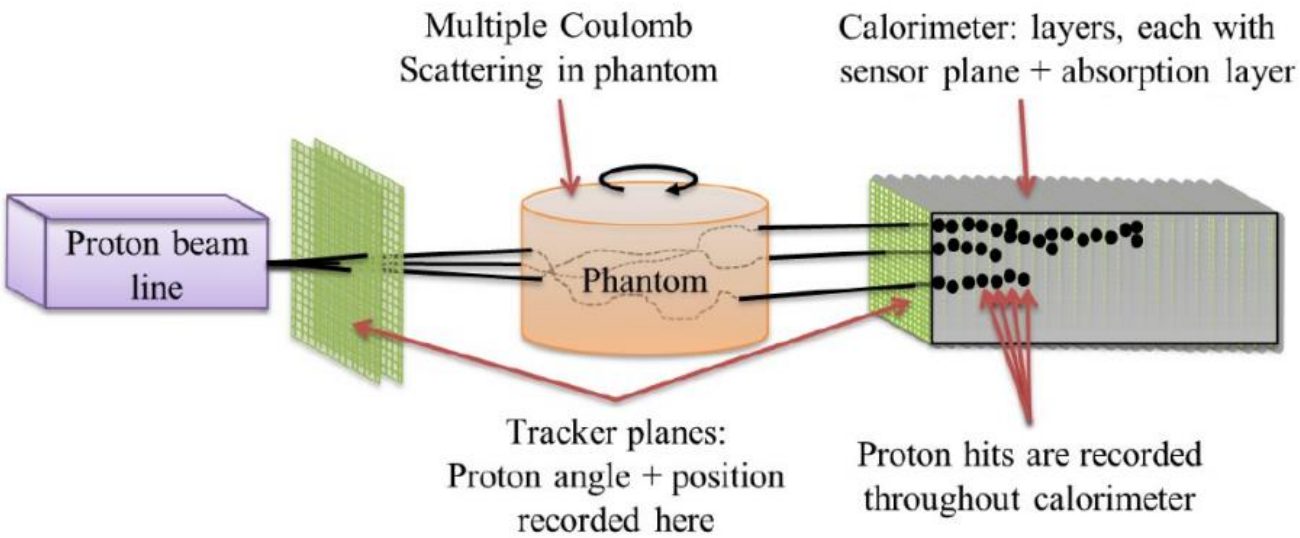


(Pettersen H.E.S., 2017)

# DTC Mechanical Package

- **Digital Tracking Calorimeter(Design parameters)**
  - ✓ Number of absorber layers and thickness
  - ✓ Material uniformity along proton trajectory
  - ✓ Mechanical stability
  - ✓ Fabrication & manufacturing aspect
  - ✓ Chip & readout electronics (mounting, sensitive area)
  - ✓ Bonding method
  - ✓ Heat transfer & Cooling
  - ✓ Mechanical deformation & errors

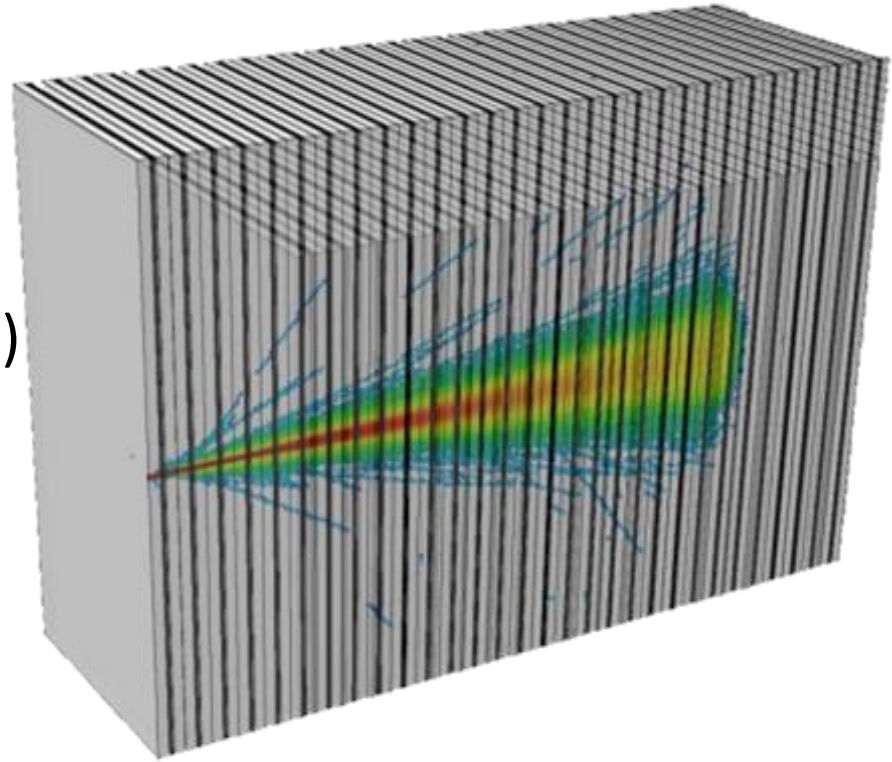

**(Pettersen H.E.S., 2017)**

# Digital Tracking Calorimeter (DTC)

- **Number of absorber layers for stopping 230MeV protons**

| Absorber thickness | Number of layers |
|---|---|
| 2 mm | ~63 |
| 3 mm | ~45 |
| 4 mm | ~35 |
| 5 mm | ~29 |
| 6 mm | ~25 |

- **Absorber thickness**

- **Material:**
  - ✓ Mechanical properties such as density, hardness, thermal capacity
  - ✓ Homogeneity
  - ✓ Ionization energy
  - ✓ Mechanica lintegrity, economy and clinical considerations

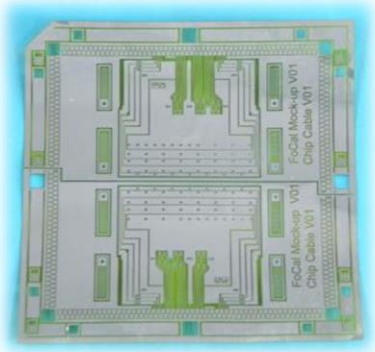

Figure from LTU

- **Material uniformity along proton trajectory**
  - ✓ Electrical connectors, wirings
  - ✓ Coolant channel
  - ✓ Support structure

Figure from ALICE ITS

# Digital Tracking Calorimeter (DTC)

- **Mechanical Stability**
  - ✓ Solid & stiff structure
  - ✓ Assembly and maintenance reliability
  - ✓ No vibration
  - ✓ Production feasibility

- **Clinical considerations**
  - ✓ Working temperature range
  - ✓ No poisonous materials
  - ✓ Coolant leakage
  - ✓ Short circuit

# Digital Tracking Calorimeter (DTC)

- **Stave assembly of Chip & read-out electronics**
  - ✓ Chip size = 1.5cm x 3cm
  - ✓ Required sensitive area = 18cm x 27cm
  - ✓ Space for data readout strip
  - ✓ Cooling methods & coolant channel
  - ✓ Uniformity

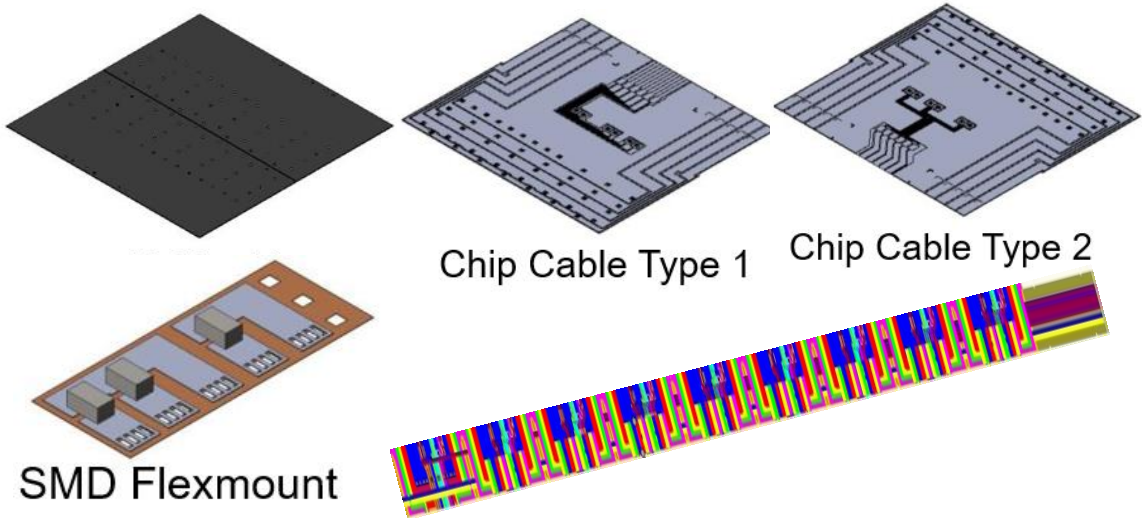


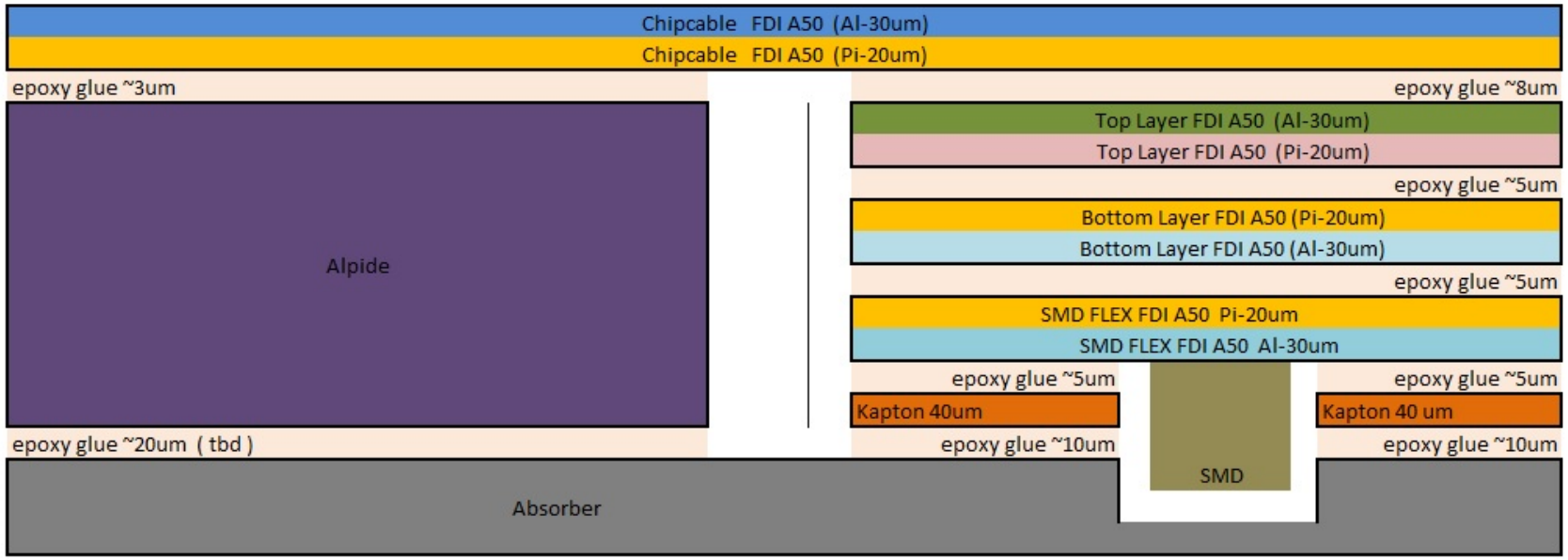


**Figures from LTU: ''9 Alpide string'' & Nikhef '' Mock up of Focal slab''**

# Digital Tracking Calorimeter (DTC)

- **Bonding method**

Mechanical Connection → Ultrasound welding

Dielectric connection → Glue protection

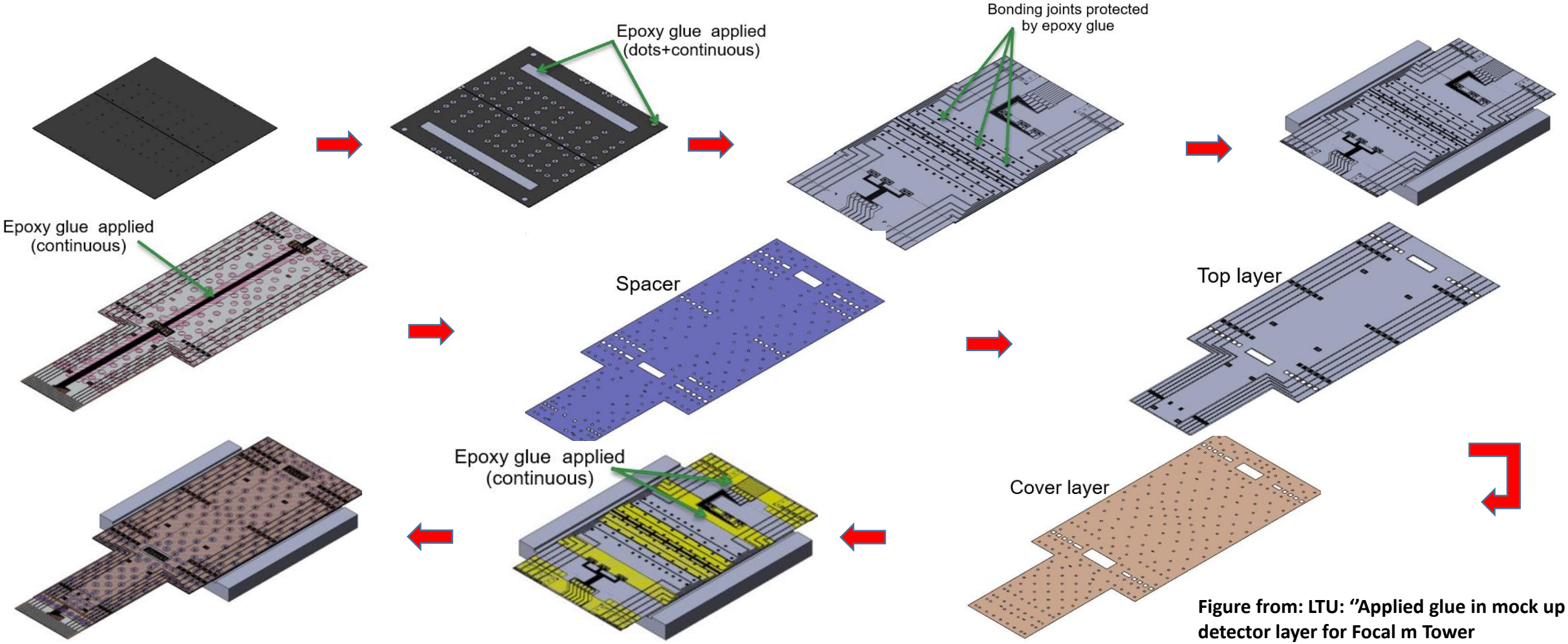


**Figure from: LTU: ''Applied glue in mock up of detector layer for Focal m Tower**

# Digital Tracking Calorimeter (DTC)

- **Sensitive area (placement of chips)**

➡ 12 Rows, each with 9 chips side-by-side

Two Scenarios:

1)

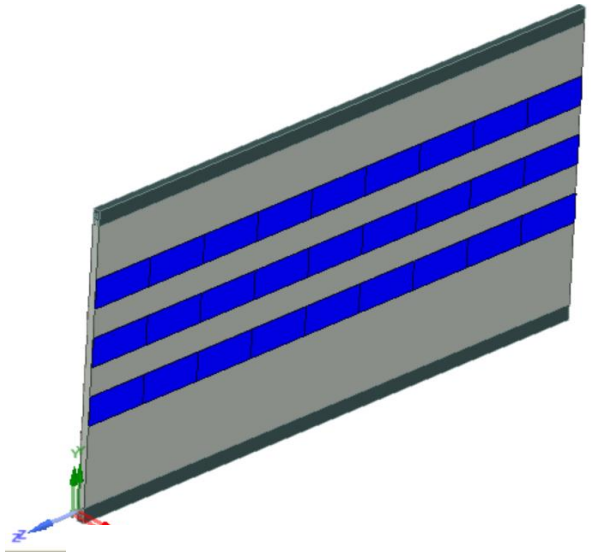

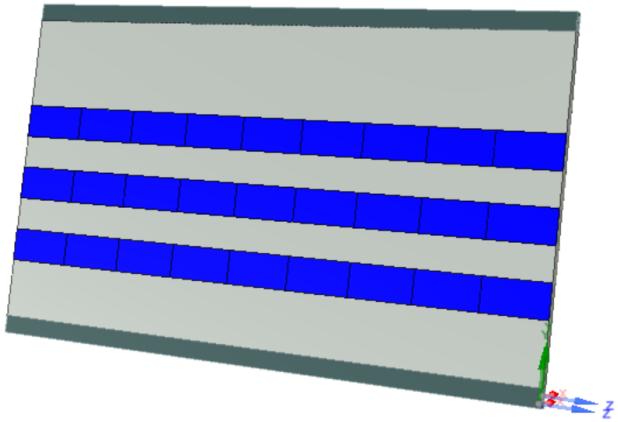

2)

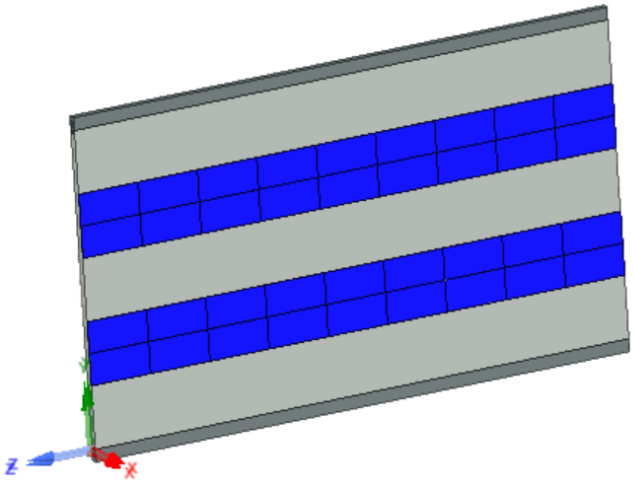

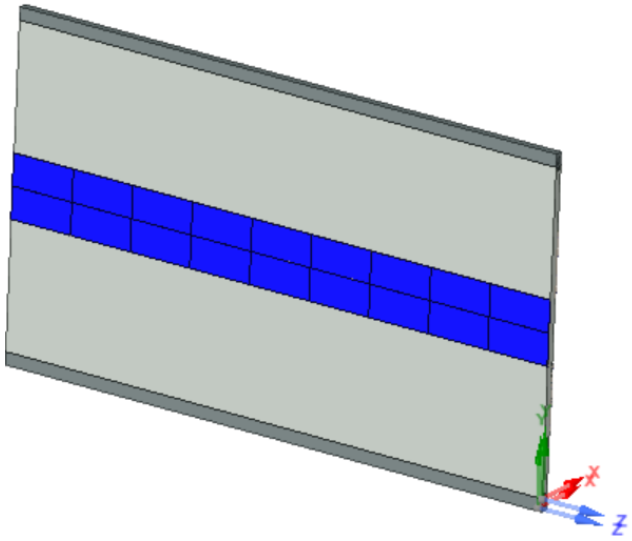

# Digital Tracking Calorimeter (DTC)

- **Sensitive area (placement of chips):**
  - ➡ Temperature distribution (FEM study)
  - ➡ Using both sides of absorber

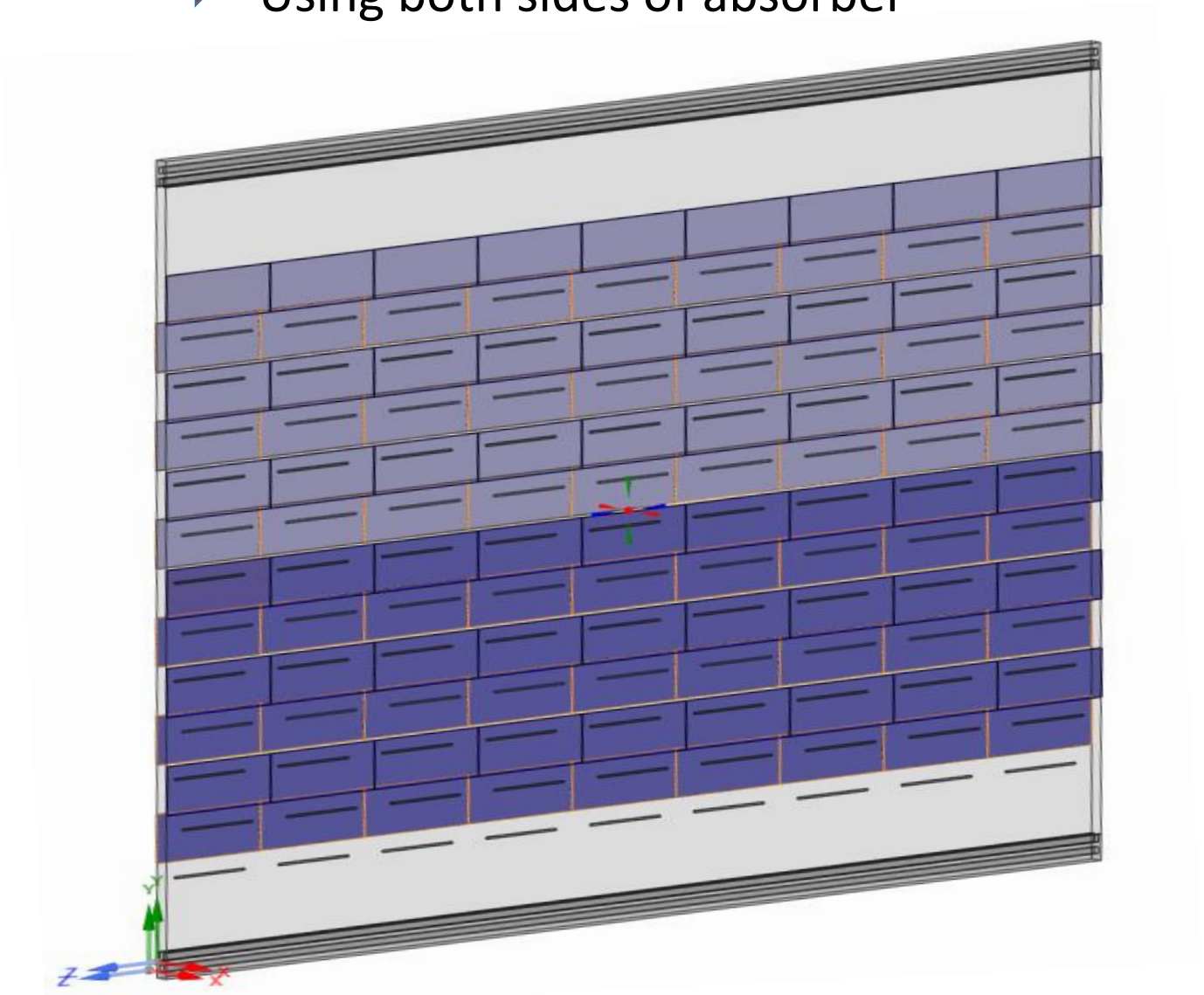

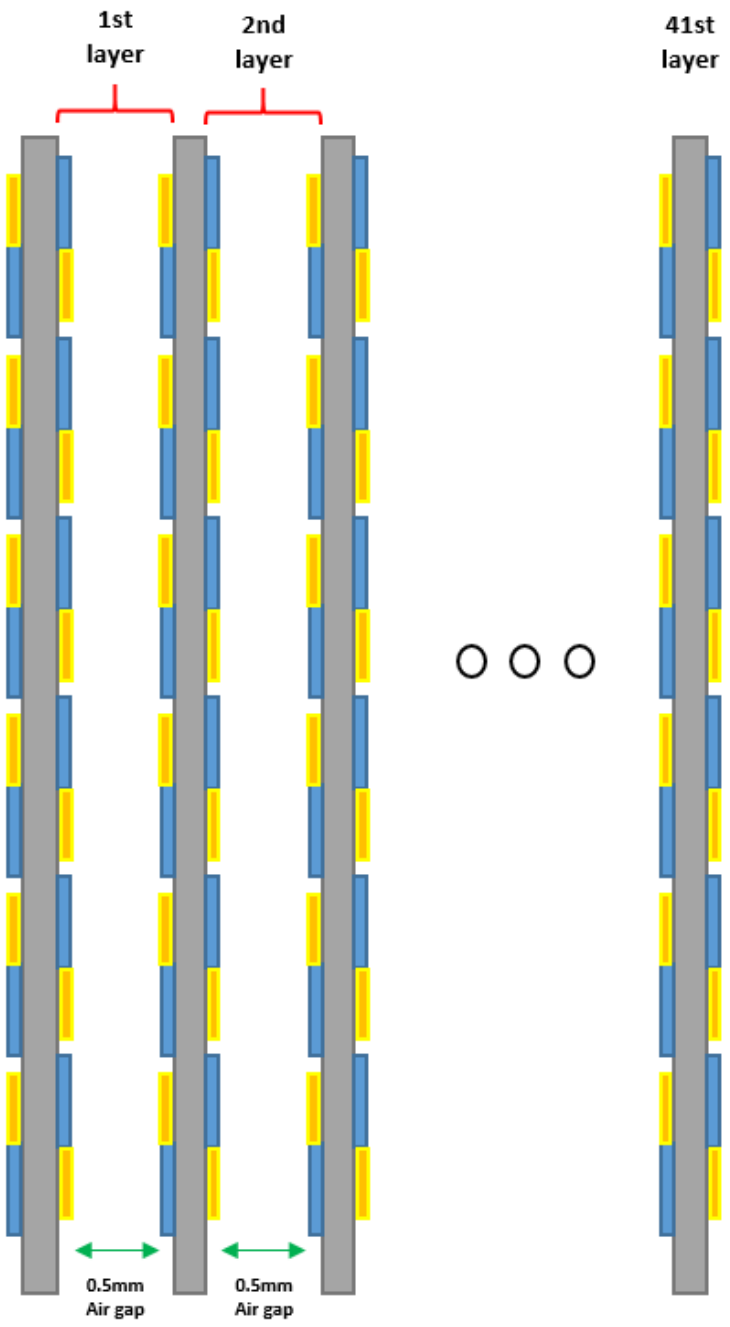

# Digital Tracking Calorimeter (DTC)

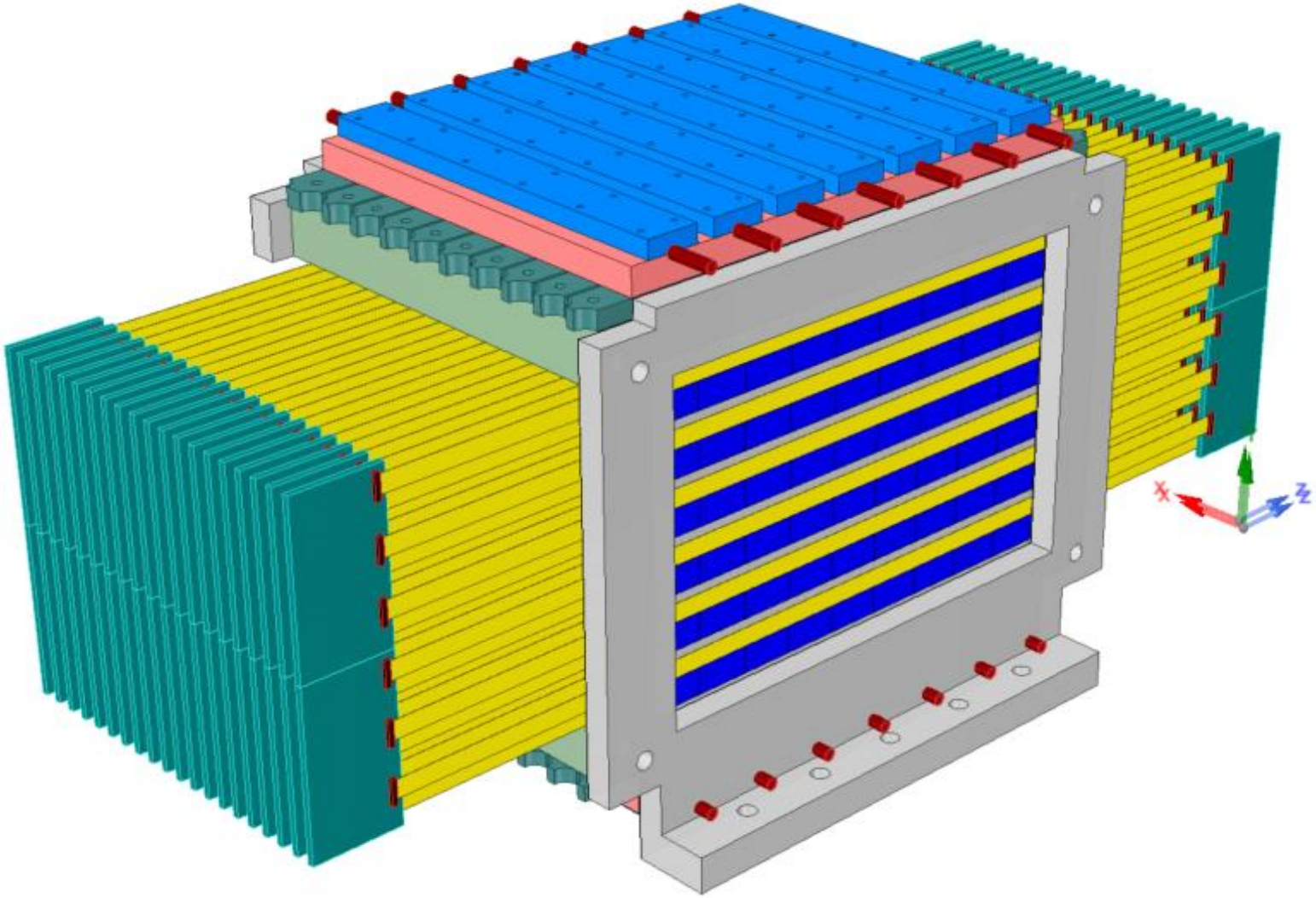


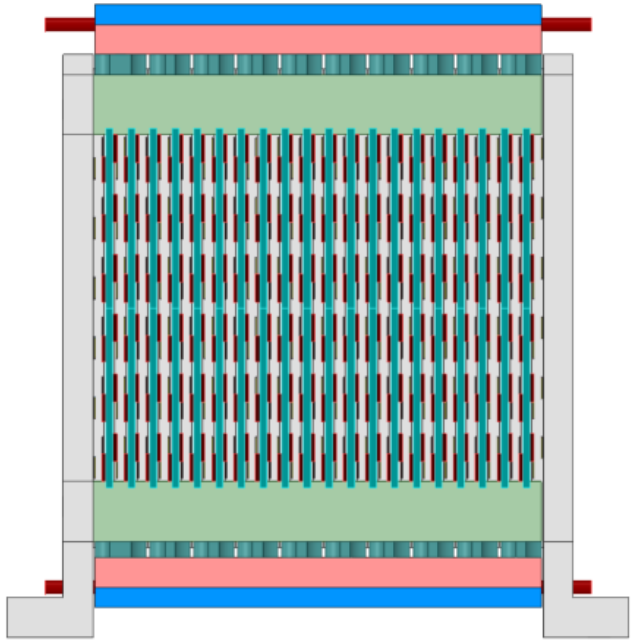

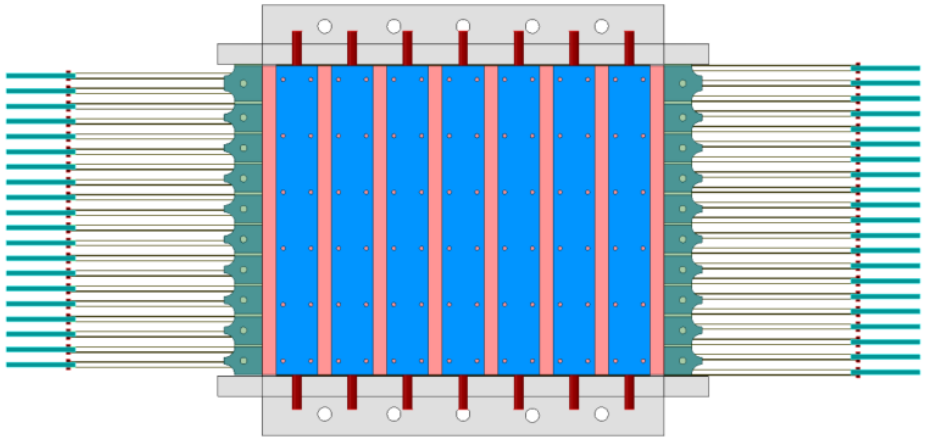

# Digital Tracking Calorimeter (DTC)

- **proton CT calorimeter configuration**

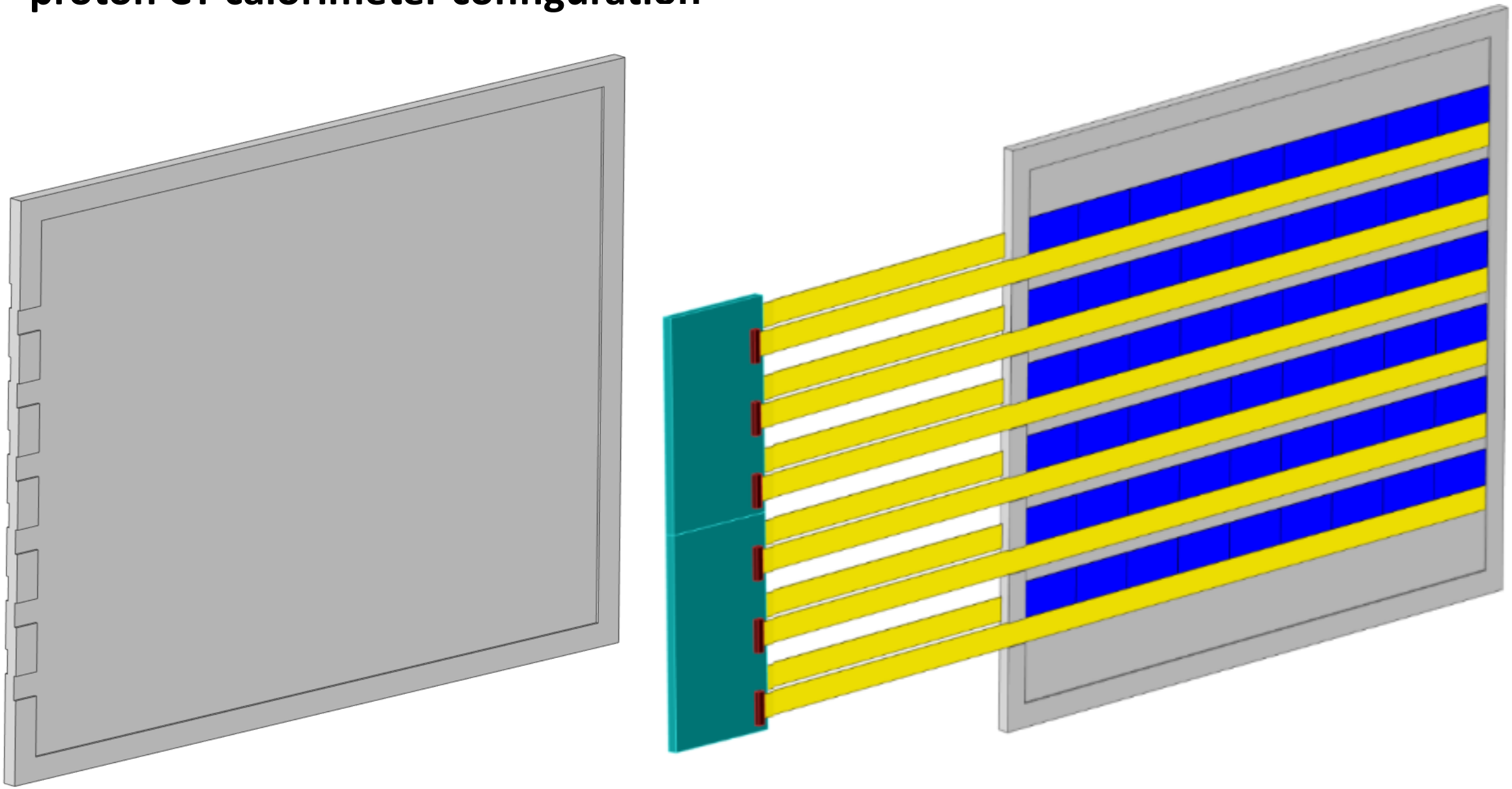

# Digital Tracking Calorimeter (DTC)

- **proton CT calorimeter configuration**

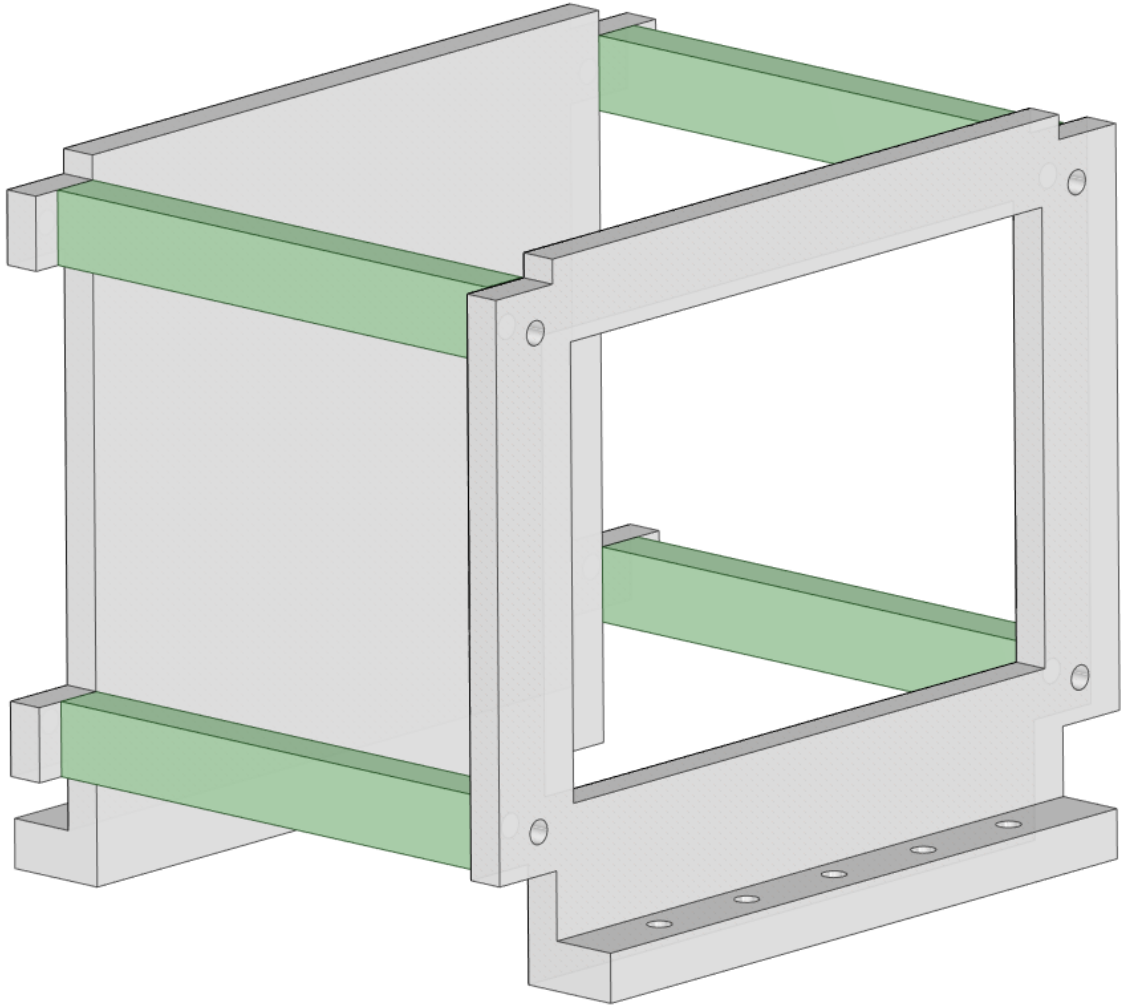

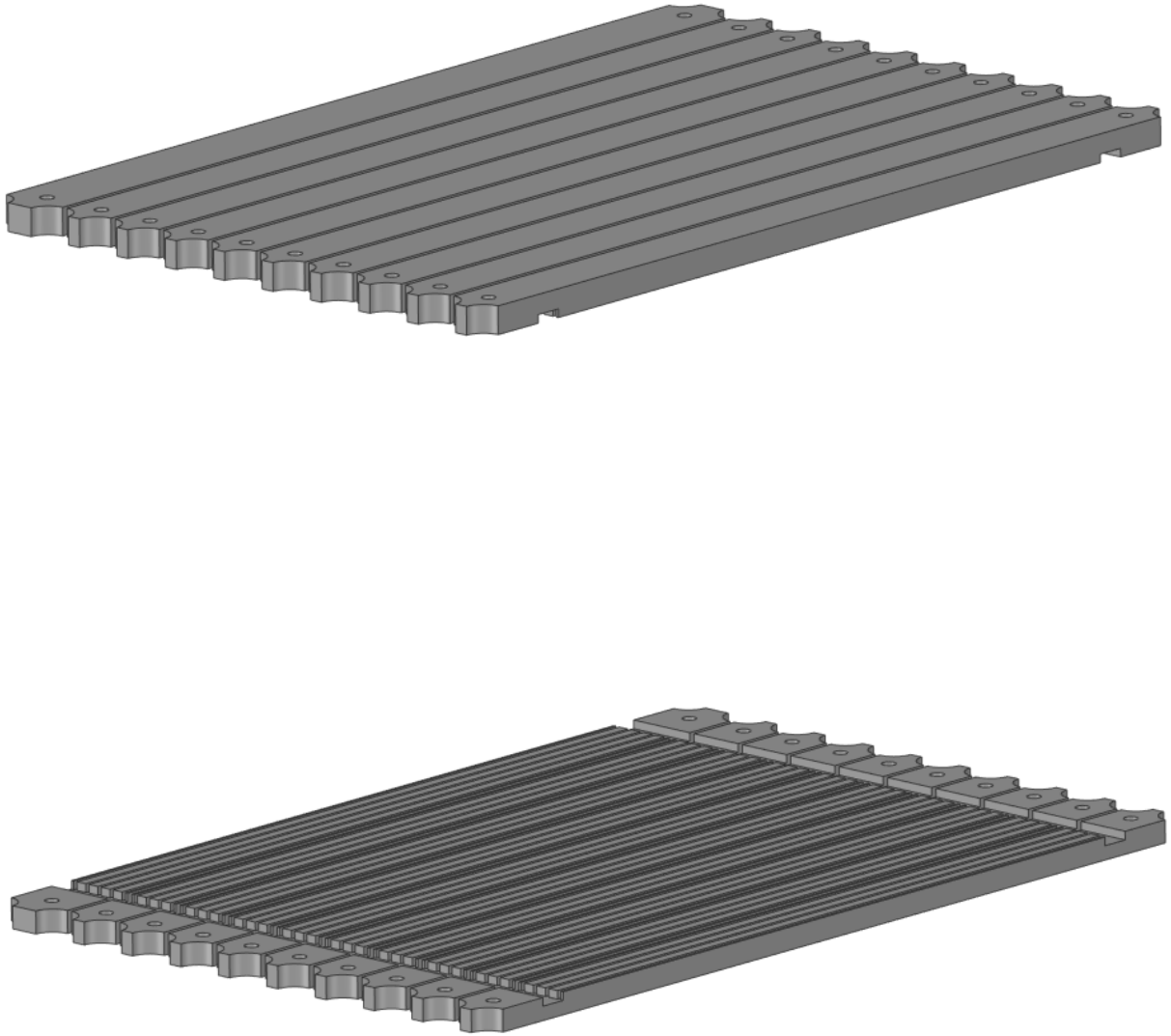

# Digital Tracking Calorimeter (DTC)

- **proton CT calorimeter configuration**

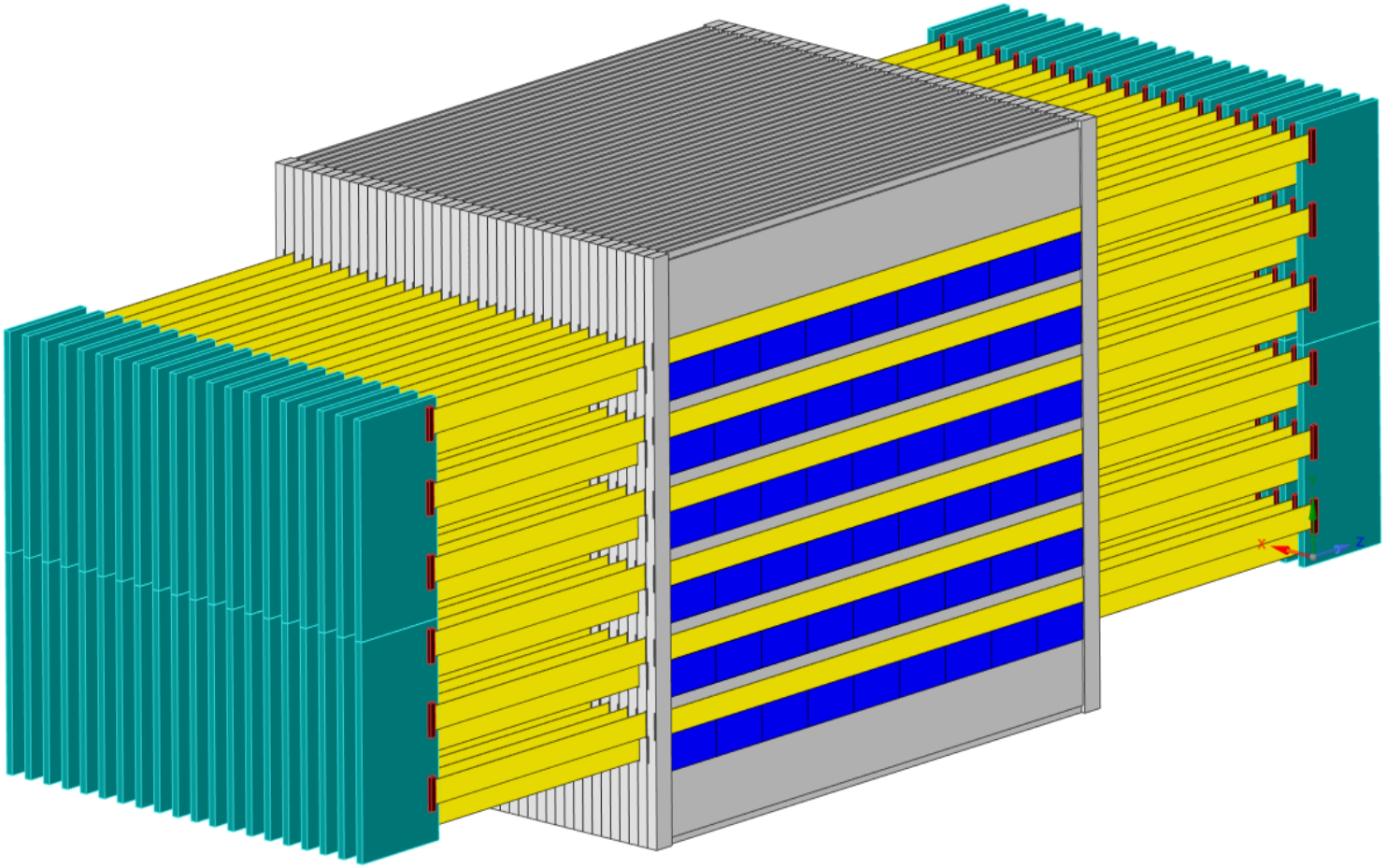

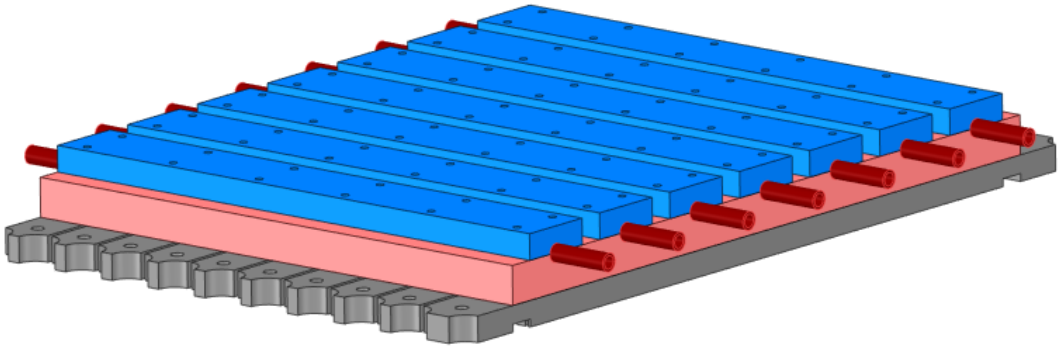

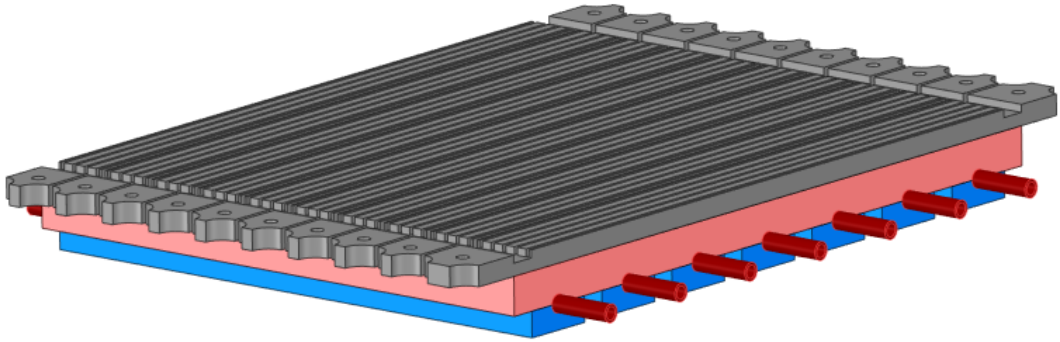

# Digital Tracking Calorimeter (DTC)

- **Simulation result for 5 stack layers pack**
  - Free convection
  - 50 mW/Cm2 heat generation
  - Laminar water cooling(T=5°C, V=1m/s)
  - Ambient Temperature 22

**Temperature distribution(C)**
**Max ~ 26.7°C**

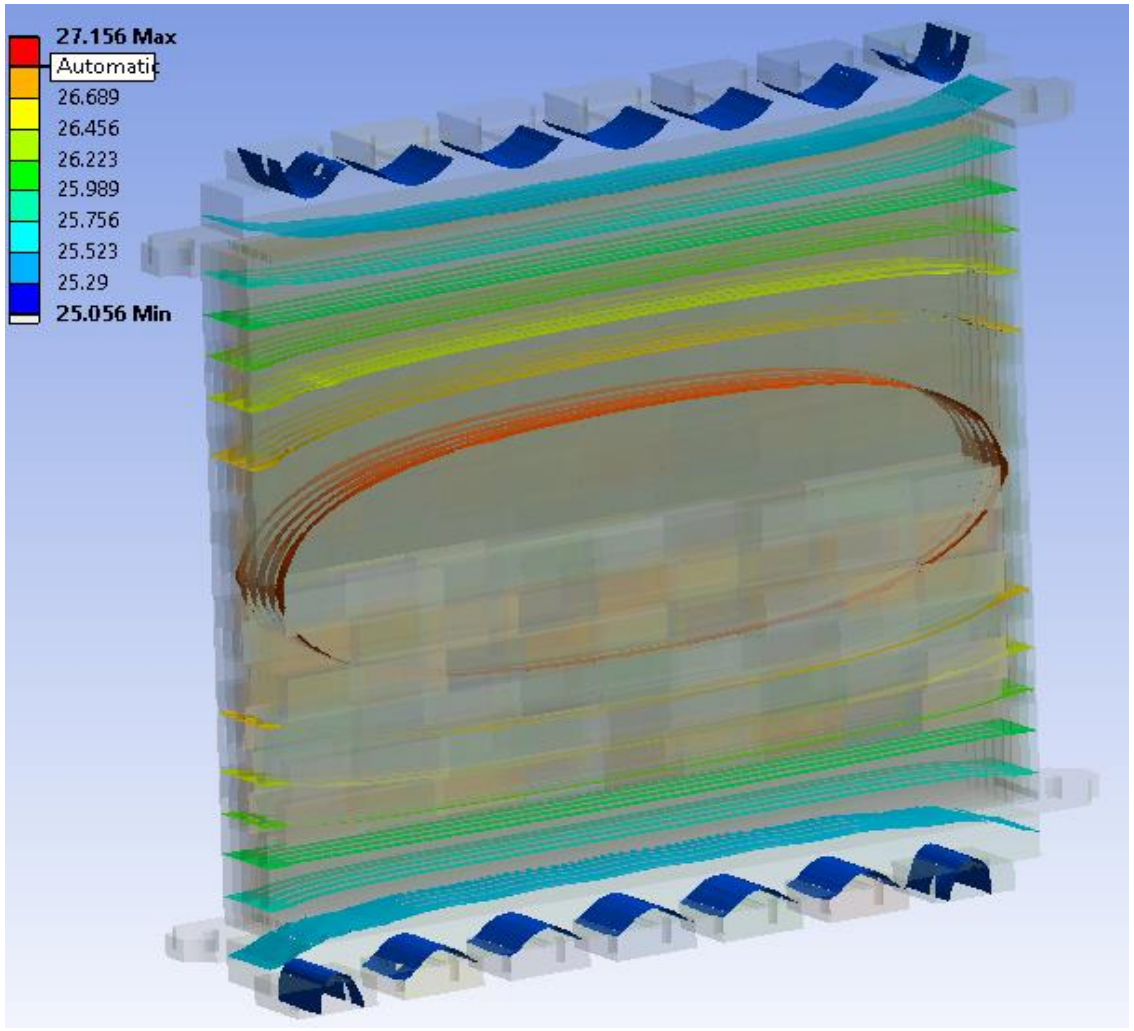


**Heat Flux (W/m2)**
**Max ~ 14828 W/m2**

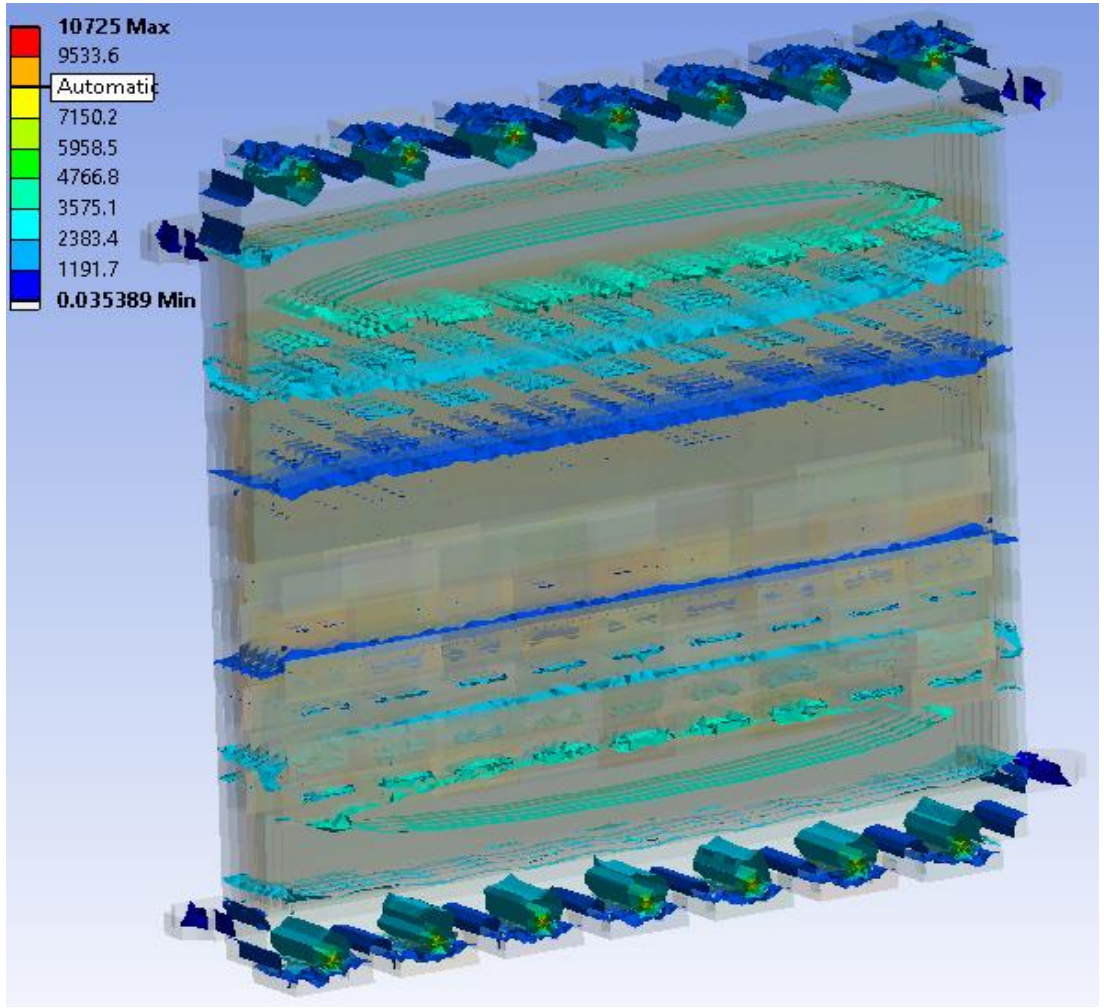

# Digital Tracking Calorimeter (DTC)

- **Simulation result for 5 stack layers pack**
  - free convection
  - 50 mW/Cm2 heat generation
  - Laminar water cooling (T=5°C, V=1m/s)
  - Ambient Temperature 22

**Total Deformation(m)**
**Max ~ 1.8e-6 m**

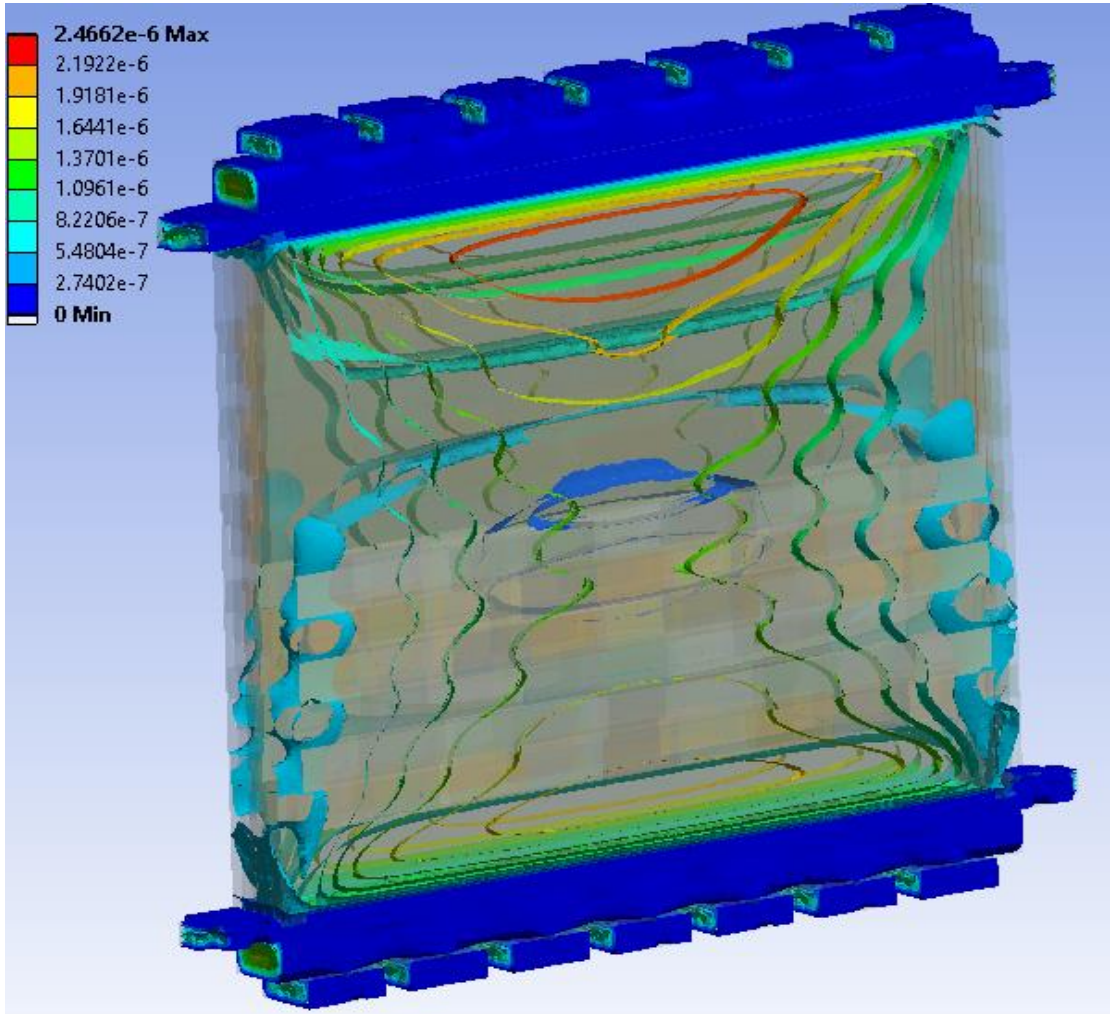


**Equivalent Stress(Pa)**
**Max ~ 2.4e7**

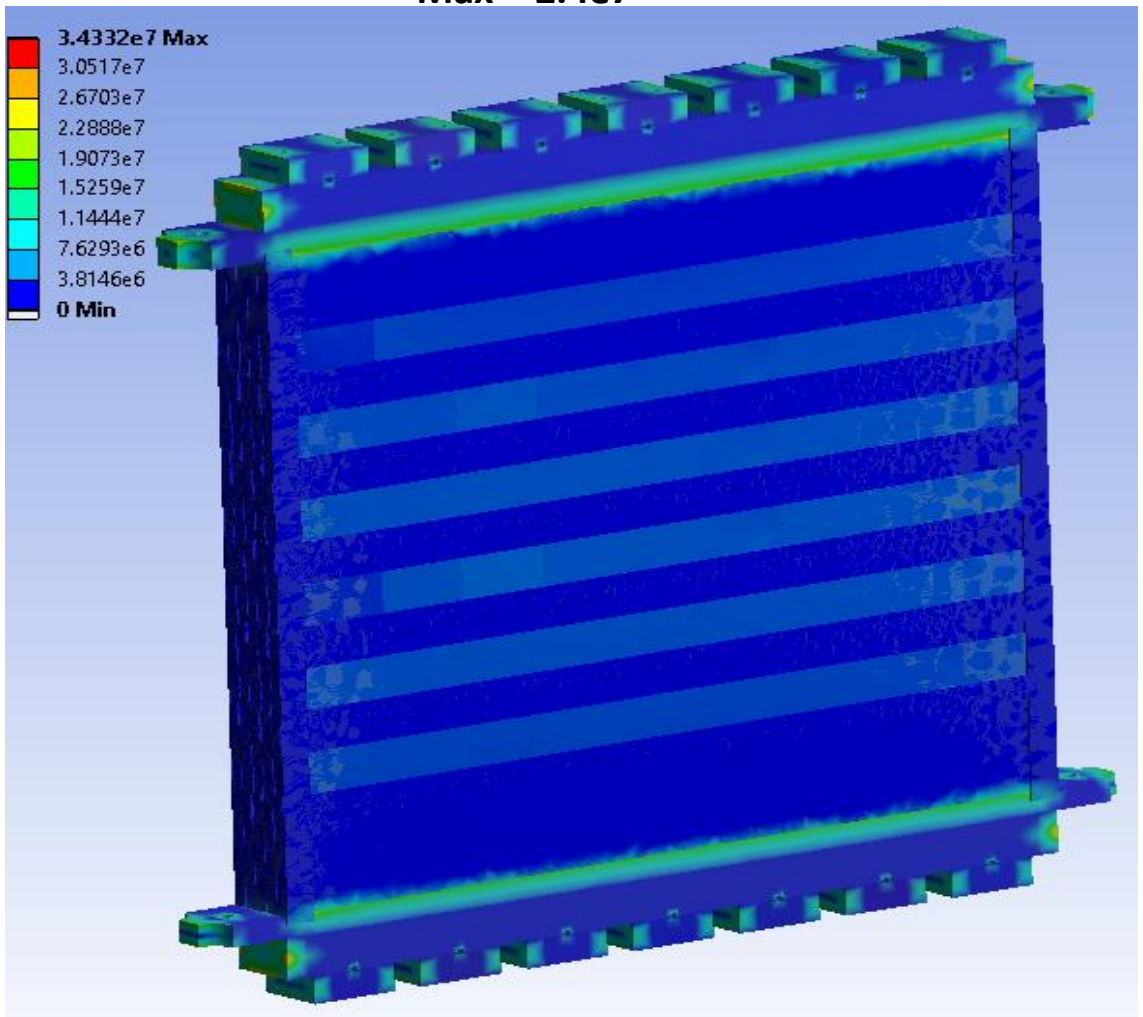

# Digital Tracking Calorimeter (DTC)

- **Tracker Plates (Front layers)**
  - ➡ Minimize multiple scatering
  - ➡ Mechanical stiffness, stability, integrity
  - ➡ Assembely & fabrication challenge
  - ➡ Cooling challenge

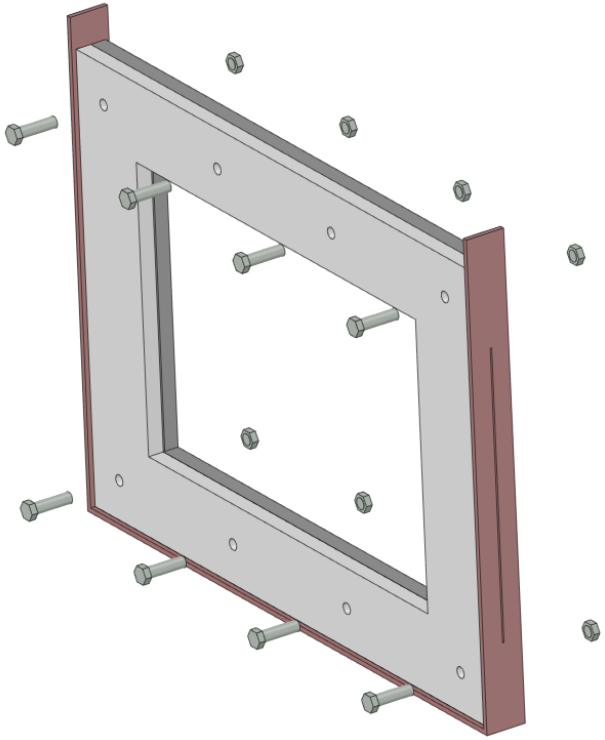

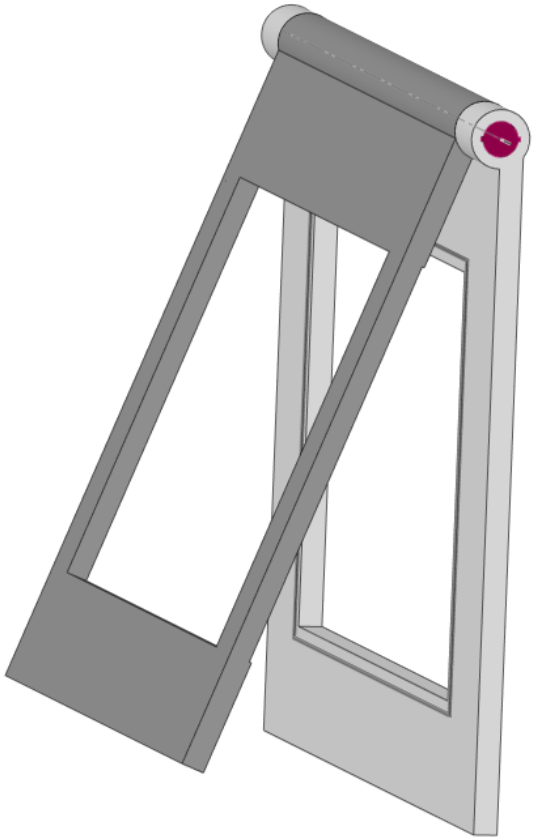

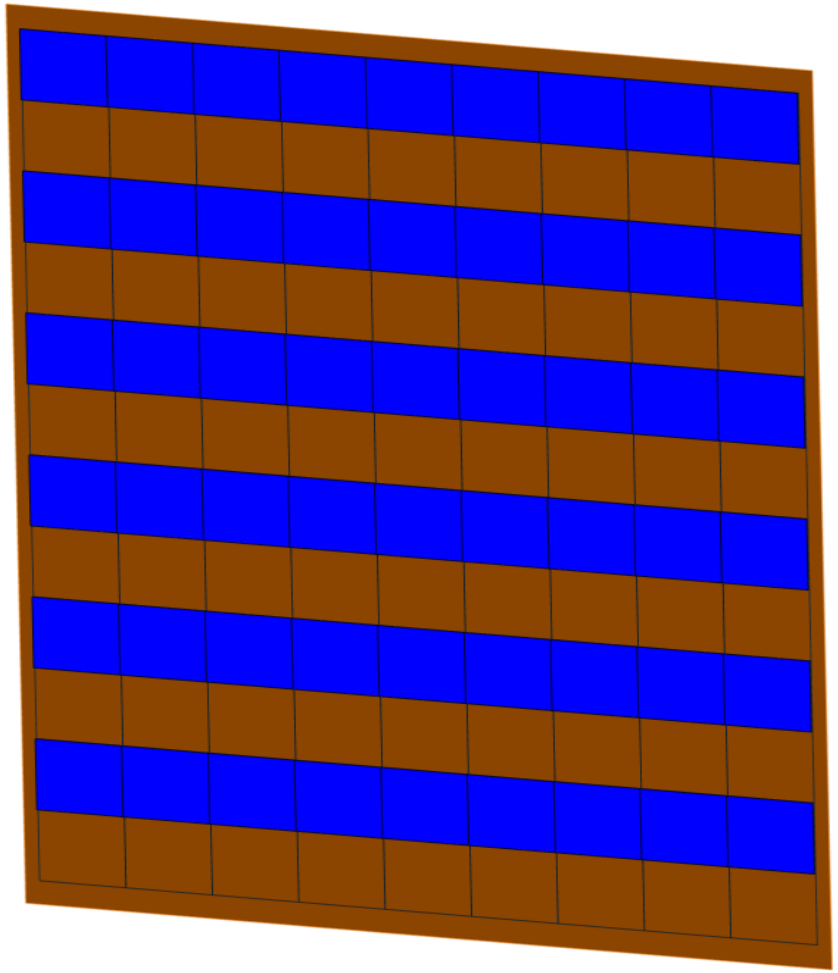

Al Thikness=200 µm
Electronics = 253 µm
Total ~ = 0.5 mm

# Digital Tracking Calorimeter (DTC)

**Future Studies:**

- Integrity & Reliability of front tracker layers:
  - Mechanical stability
  - Cooling
  - Protection

- Detectore Coolant study:
  - intensive heat transfer methods (Fluid Mechanics -CFD-)
  - Humidity & ventilation solution
  - Stave in plate heat transfer (Bonding, Thermal contact resistance )

- Data readout developement

- Sensitivity study of electronic layer arrangement

- Deformation analysis (Operational & accidental) and effect imaging accuracy

# Thank You