Production and Quality Assurance of the Mu2e Silicon PhotoMultipliers

Luca Morescalchi

On the behalf of the Mu2e calorimeter collaboration
INFN – Pisa (luca.morescalchi@pi.infn.it)

mu2e.fnal.gov

1. The Mu2e Experiment: a Search for $\mu + N \rightarrow e + N$

The **Mu2e Experiment** will search for coherent, neutrinoless conversion of muons into electrons in the field of a nucleus. **Such a charged lepton flavor-violating reaction allows to probe energy scales up to thousands TeV**, far above the highest energy reachable at the most powerful colliders. If no conversion events are observed in three years of running, Mu2e will set a limit on the ratio between the conversion rate and the capture rate: **$R_{\mu e}$ <6 x 10^{-17} (@ 90% C.L.).**

Production Solenoid (PS)
An **8 GeV proton beam** hits a tungsten target
A graded magnetic field reflects muons to the TS

Cosmic Ray Veto (CRV)
4 layers of plastic scintillator bars
Covers the entire DS and half of the TS

Straw Tracker (TRK)
20000 low mass straw drift tubes
Momentum resolution **180 keV/c**

Electromagnetic Calorimeter (ECAL)
1348 undoped CsI crystals
Energy, Time and Position measurements

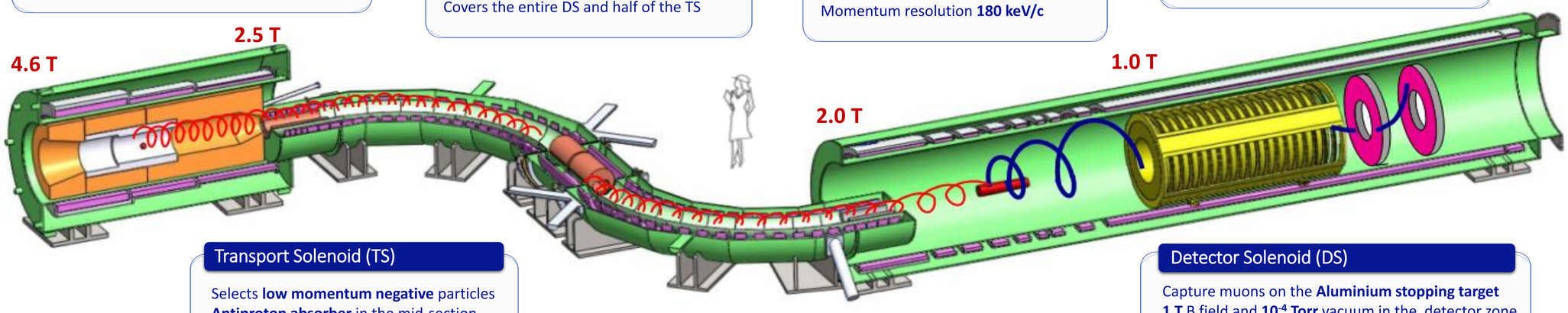

Schematic view of the Mu2e beamline

Transport Solenoid (TS)
Selects **low momentum negative** particles
Antiproton absorber in the mid-section

Detector Solenoid (DS)
Capture muons on the **Aluminium stopping target**
1 T B field and **10^{-4} Torr** vacuum in the detector zone

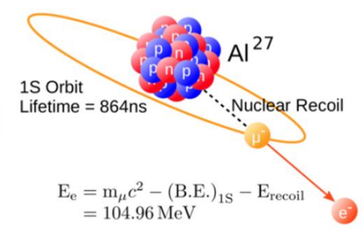

Experimental Technique
Stop muons in Aluminium
Muons quickly get to 1S orbit
Lifetime of muonic atom is 864 ns
Look for the 105 MeV conversion electron

2. The Electromagnetic Calorimeter

The Electromagnetic Calorimeter is an high granularity crystal calorimeter consisting of about 1348 **undoped CsI crystals**, 3.4x3.4x20 cm^3 each. The crystals are arranged in **two disks**, separated by 75 cm, with inner and outer radii of 37.4 cm and 66 cm.

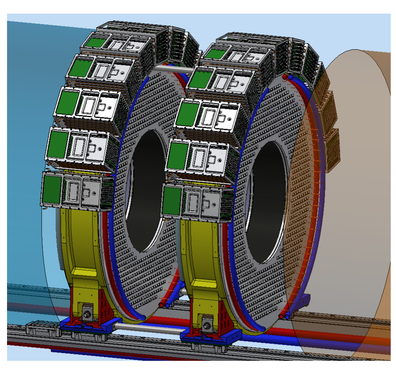

Each crystal is coupled to two 14x20 mm^2 **large area UV-extended SiPM**, for a total of **2694 electronics channels**. Photosensors are packed using a parallel arrangement of two groups of three cells biased in series.

Calorimeter Requirements:

- Particle identification μ/e
- Seed for track pattern recognition
- Tracking independent trigger

⇒ **$\Delta E/E$ < 10% and Δt < 500 ps**
⇒ **Position resolution of O(1 cm)**

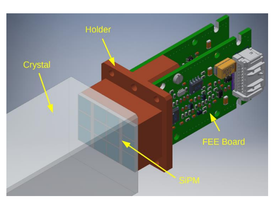

CsI crystal + SiPMs + FEE

Electronics crates are located **inside the cryostat** to limit the number of pass through connectors.

3. The Mu2e Custom SiPM

The Mu2e custom SiPM are made of a 2x3 array of 6x6 mm^2 UV-extended SiPM. The two series readout reduces the overall capacity and allows to reach a faster signals.

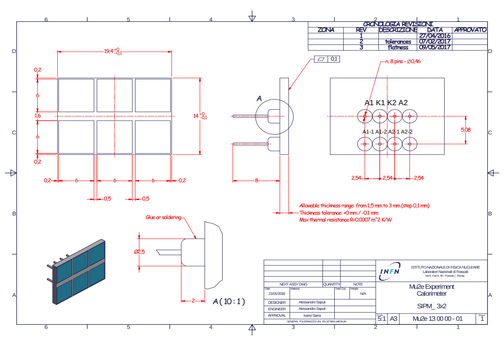

SiPM Requirements:

- A Gain greater than 10^6
- A PDE above 20% at 310 nm
- A fast rise and recovery time
- A large reliability
- Total Ionizing Dose (TID) of 7 kRad/yr
- Neutron flux of $1x10^{11}$ 1 MeV (Si)/yr

Hamamatsu devices have been selected after and international bid: production is ongoing and about 1000 devices have been tested yet!

QA process will involve 24k cell characterizations!

4. SiPMs Characterization

Automatized Test Station: 25 sensors/time (20 tested + 5 as reference), one cell characterization/1.2 min!

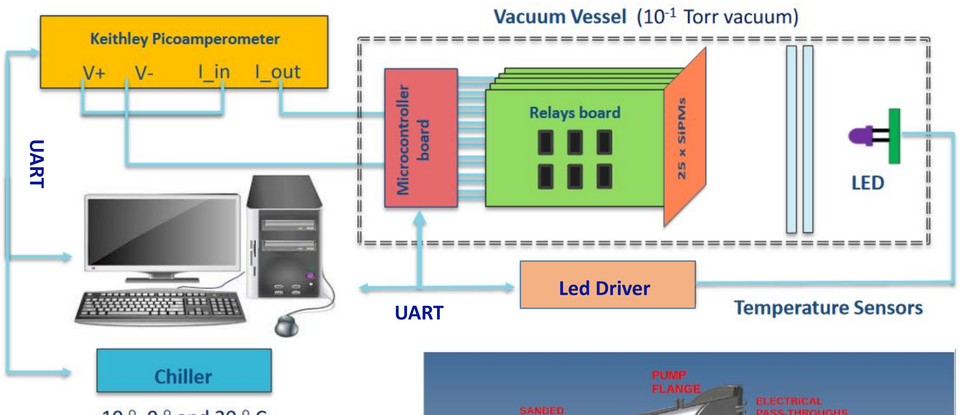

For each cell we measure:

1. Breakdown Voltage
2. Dark Current @ Vop
3. Gain x PDE @ Vop

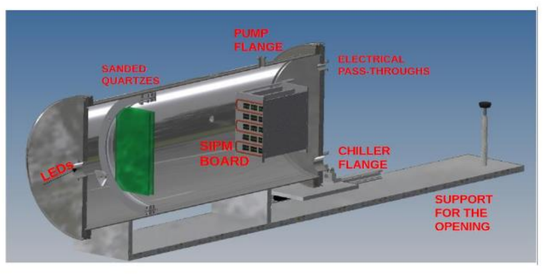

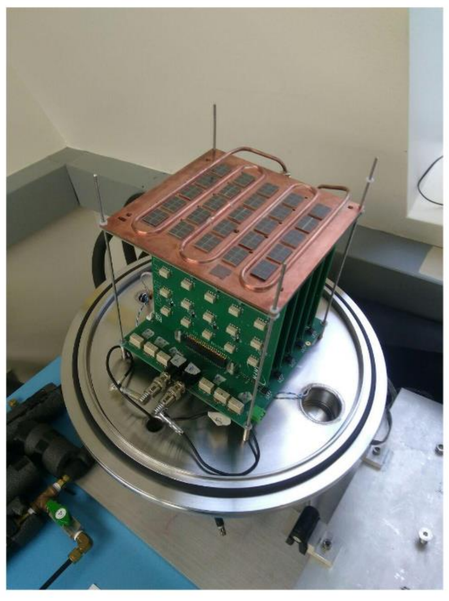

The cell to bias is selected among the 150 inside the vessel by a custom electronic system that drives more than one hundred relays. The bias voltage is provided by a Keithley 6487 that also performs the current measurements.

I-V Curve and Breakdown Voltage:

$$I(V) = \begin{cases} I_0 + C \times (1 - e^{-p \cdot (V - V_{br})} \times (V - V_{br}) & V > V_{br} \\ I_0 & V < V_{br} \end{cases}$$

- V is the bias voltage
- Vbr is the breakdown voltage
- I_0 is the current before the breakdown
- C is proportional to the number of the free carriers (thermal + optical)

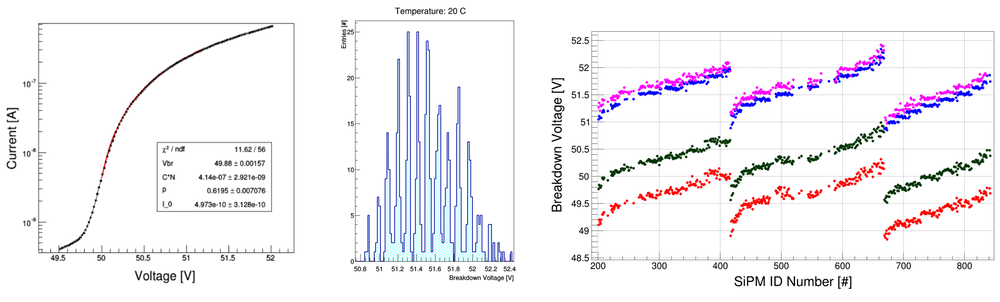

Dark Current:

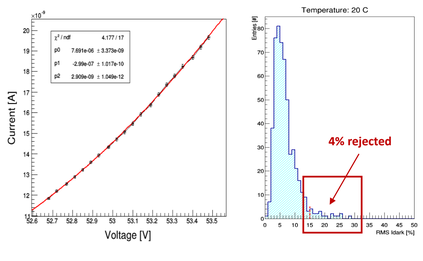

Gain x PDE:

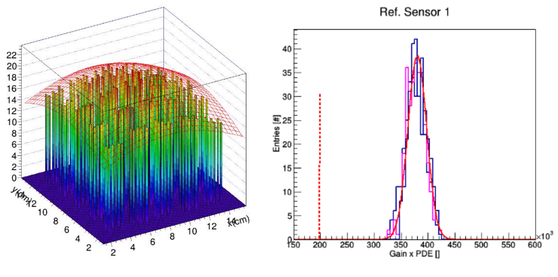

5. Dimensional Test

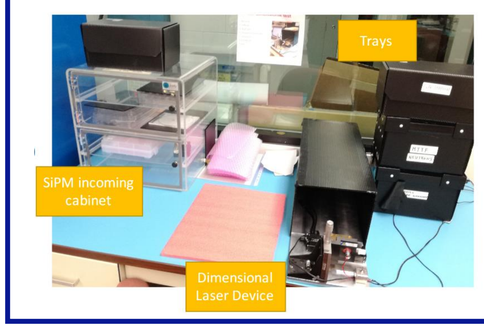

Each SiPM has to respect a mechanical tolerance of 100 micrometers:

- Integrity and damages check
- Measurement of SiPM dimensions (transversal dimensions and thickness)
- Chinese Shadow technique with a laser
- Go, not-go gauge test station

6. Radiation Hardness

For each batch, 5 SiPMs are irradiated @ EPOS (HZDR, Dresden) with a neutron Integrated flux of 1.7 x 10^{12} n_{1MeV} (Si) / cm^2

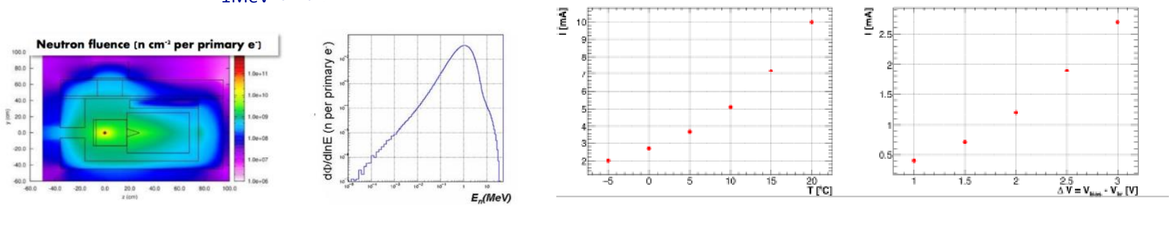

7. Mean Time To Failure

Each batch of SiPMs has to grant an MTTF of 1 million hours when operating at 0° C:

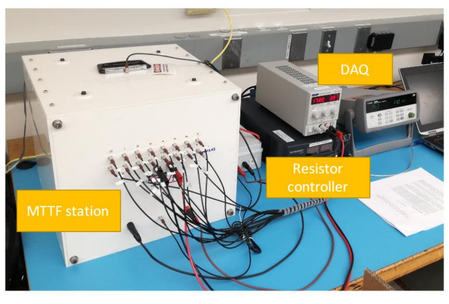

E_a=0.7 eV for Silicon,
T_{use}=273 °K
T_{stress}= 338 °K

$$AF = exp\left[\frac{E_a}{k}\left(\frac{1}{T_{use}} - \frac{1}{T_{stress}}\right)\right]$$

0.5 x N_{hours} x AF x N_{SiPM}~10^6 hours

Current behaviour wrt time of the MTTF test of the first batch

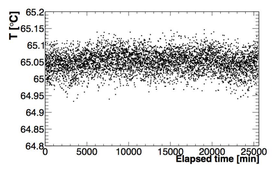

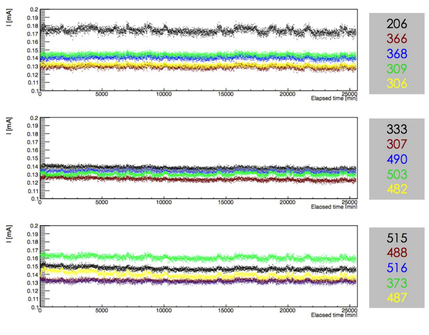

- Stress temperature 65 ˚C
- 18 days of test for 15 SiPMs
- Dark current at the operational voltage acquired every 5 minutes
- No "deads" →MTTF > **10^6 hours**

This work was supported by the US Department of Energy; the Italian Istituto Nazionale di Fisica Nucleare; the US National Science Foundation; the Ministry of Education and Science of the Russian Federation; the Thousand Talents Plan of China; the Helmholtz Association of Germany; and the EU Horizon 2020 Research and Innovation Program under the Marie Sklodowska-Curie Grant Agreement No.690385. Fermilab is operated by Fermi Research Alliance, LLC under Contract No. De-AC02-07CH11359 with the US Department of Energy.