Radiation tests and production-test strategy for the ALICE TOF readout upgrade board

Davide Falchieri for the ALICE Collaboration

INFN Bologna

davide.falchieri@bo.infn.it

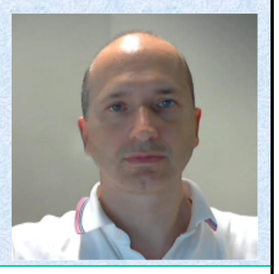

Abstract: *The readout board for the ALICE TOF detector named DRM2 is now in the production phase: 88 boards are being produced (72 are needed in the experiment). Since the board will operate in a radiation environment (0.13 krad total dose expected in 10 years), a complete irradiation campaign at the component level was performed. We focus on the irradiation tests on a Microsemi Igloo2 FPGA and two Avago optical transceivers with a 100 MeV proton beam, available at the facility operated by INFN-TIFPA at the Centro di Protonterapia in Trento. This poster also focuses on the board production test strategy.*

Summary:

In order to fulfill the new requirements on data acquisition performances given by the higher interaction rates both in proton-proton and in lead-lead collisions during RUN3 and RUN4 in ALICE, an upgraded version of the readout card was designed for the ALICE TOF detector and is now ready for production. The board features a few components which are in common with the previous-generation board, like an on-board ARM-processor mezzanine (A1500), and more up-to-date devices like the Microsemi Igloo2 FPGA and the GBTx ASIC from CERN. An irradiation campaign at the Centro di Protonterapia in Trento was performed in 2018 with the goal to quantify the cross section of the board components to single event upsets (SEUs) as well as to evaluate the susceptibility to latch-up and total irradiation damages up to a dose of a few krad (factor ~10-20 related to the expected dose in the real-life experiment). In a previous irradiation campaign in 2016 we tested several other components like static SRAM, clock and voltage-drop regulators in addition to the Igloo2 FPGA (silicon revision 1) and the optical receivers FLTL8524P28BNL and FLTL8524P28BNV from Finisar. Worryingly, for the FPGA and these last two devices, we observed single event latch-ups.

Using a 100 MeV proton beam, we then studied in 2018 three Microsemi Igloo2 FPGA (using the latest available silicon revision number 3) and two Avago transceivers. For what concerns the FPGA, irradiated with a cumulative fluence up to 4 10^{10} p/cm^2, we did not experience any latch-up events. We also measured a SEU cross section on the internal BRAM as low as 2 10^{-14} cm^2 per bit. It is worth mentioning that all the FPGAs were still reprogrammable after receiving a dose of 3.8 krad even if, in one case, a certain annealing time was needed before the FPGA recovered its re-programming capability. Concerning the Avago optical transceivers, we used a sample of 4 **AFBR-57R5AEZ** and 4 **AFBR-57R5APZ**. No latch-up events and just one SEU on the former type were observed.

DRM2 board

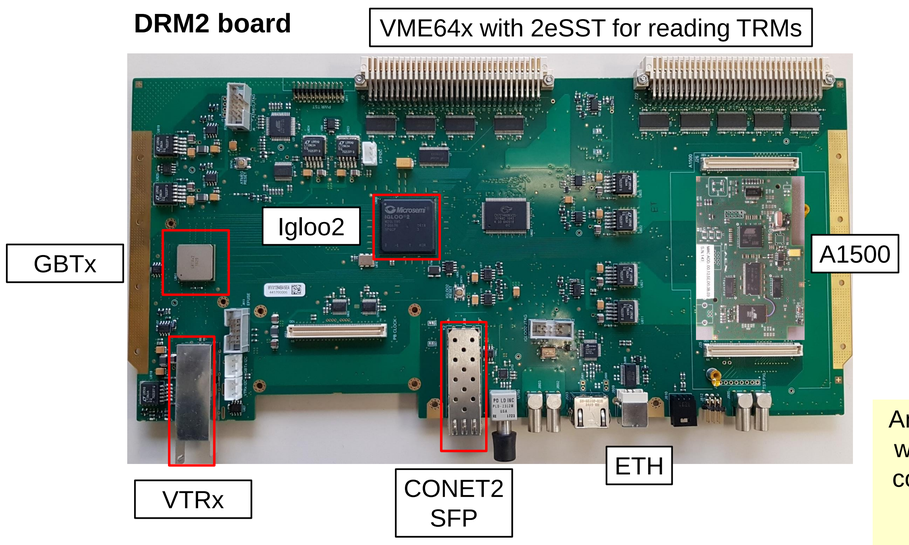

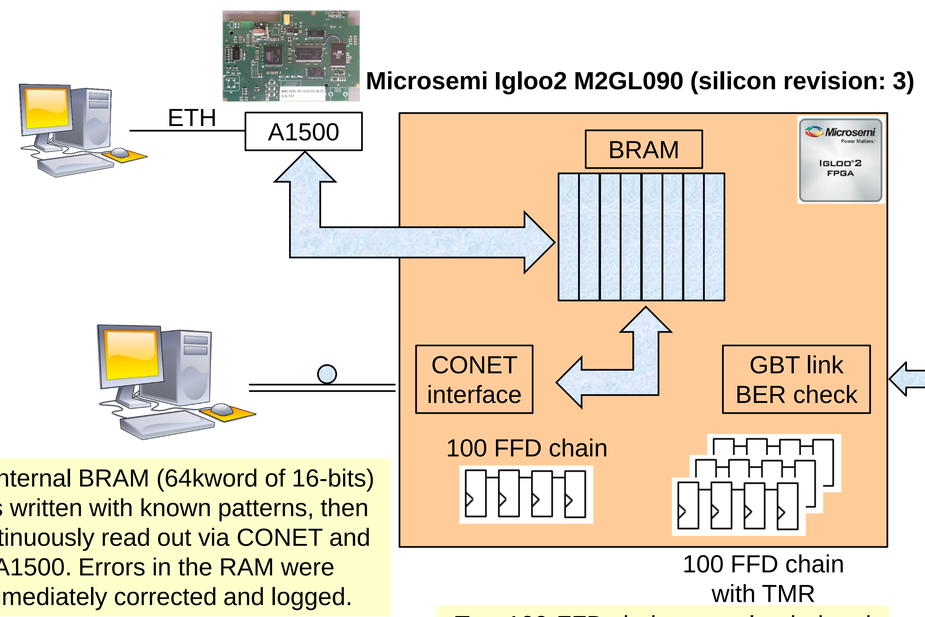

An internal BRAM (64kword of 16-bits) was written with known patterns, then continuously read out via CONET and A1500. Errors in the RAM were immediately corrected and logged.

Two 100-FFD chains were loaded and continuously checked for errors

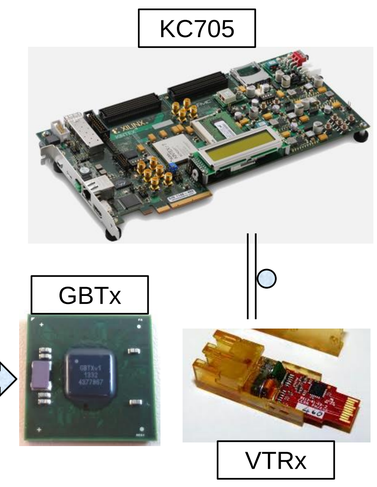

KC705 was sending a known pattern to the Igloo2 via the GBT link. Data were then sent back like in a loopback and checked against the expected values.

Irradiation results

Avago transceiver irradiation tests (TID + SEU)

100 MeV proton beam

Igloo2 FPGA irradiation tests (TID + SEU)

Device	Cyclotron current (nA)	Flux (p/s)	Duration (s)	Fluence (p)	Dose (krad)	Dose rate (rad/s)
EZ1	10	1.04 10^8	300	3.12 10^{10}	2.93	9.78
EZ2	10	1.05 10^8	300	3.15 10^{10}	2.96	9.78
EZ3	10	1.04 10^8	450	4.68 10^{10}	4.40	9.78
EZ4	10	1.04 10^8	600	6.24 10^{10}	5.87	9.78
PZ1	10	1.04 10^8	300	3.12 10^{10}	2.93	9.78
PZ2	10	1.04 10^8	300	3.12 10^{10}	2.93	9.78
PZ3	10	1.04 10^8	450	4.68 10^{10}	4.40	9.78
PZ4	10	1.04 10^8	600	6.24 10^{10}	5.87	9.78

Latch-up events: 0
SEU events: 1 on EZ type

Device	Fluence (p)	Dose (krad)	BRAM SEUs	Cross section (1/cm^2/bit)	Flip-flop chain SEUs	Flip-flop chain SEUs with TMR	Link loss	GBT link SEUs
IG1	1.32 10^{10}	1.24	129	9.32 10^{-15}	0	0	0	0
IG2	2.54 10^{10}	2.39	439	1.65 10^{-14}	0	0	0	0
IG3	4.06 10^{10}	3.82	605	2.13 10^{-14}	1	0	1	0

We performed the irradiation in steps, to check whether the FPGA was still re-programmable after receiving a certain amount of radiation:

- IG1 and IG2 were still programmable after each irradiation step.
- IG3 needed 12 hours of annealing before being re-programmable again

Latch-up events: 0

Production board tests

88 DRM2 boards are currently being produced at CAEN in order to provide the 72 cards required for the experiment plus spares. The production-test strategy is built upon a 3-stage approach: a first test is done at the manufacturer site (CAEN), followed by a second test performed at CERN using the same setup system as at CAEN. Before their insertion in the detector (planned during 2019), the boards are finally tested in the custom ALICE TOF VME crate where all real-life functionalities (like reading out the full crate at sustained rate) are tested together. DRM2 boards which successfully pass all the 3 steps will be installed in the experimental crates while the commissioning stage *in situ* will start in late 2019.

List of tests:

- switch on (check voltages/currents)
- program Igloo2 FPGA
- check CONET link
- check VME
- check SSRAM
- GBTx Efuse programming
- check GBTx + data acquisition

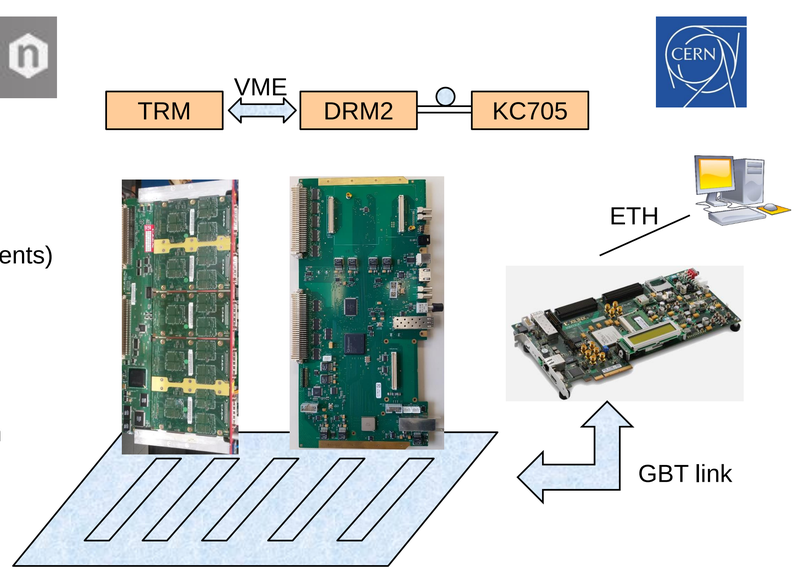

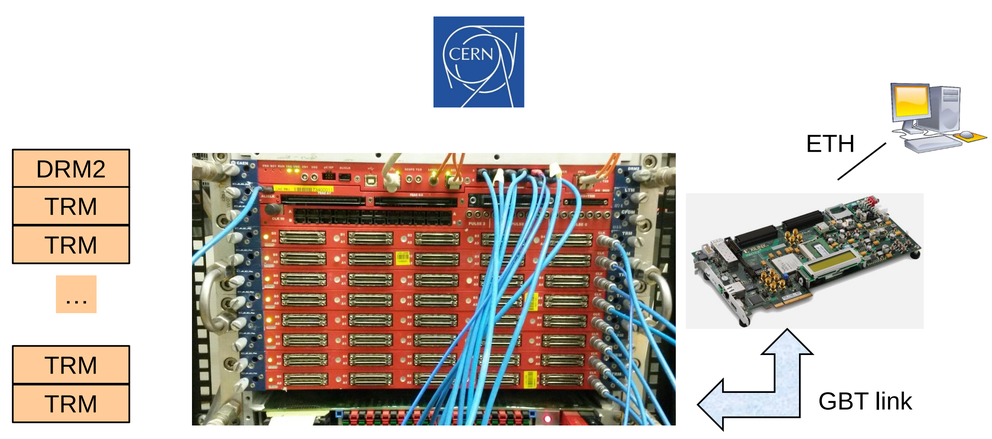

The DRM2 has to demonstrate to be able to acquire data from 9/10 TRM boards at a sustained trigger rate of 33 KHz for 2 hours. Data are then processed offline to check their quality.