Zynq-based Run Control for the ATLAS MUCTPI Upgrade

- Introduction
- Remote-Procedure-Call (RPC)-like Approach
- ATLAS TDAQ Run Control Application
- Outlook

ATLAS - MUCTPI

→ **Muon-to-Central-Trigger-Processor Interface**

- **Functionality of the MUCTPI:**
  - Data concentration of 208 muon trigger sector inputs
  - Overlap removal, i.e. avoid double counting of single muons
  - Provide muon trigger objects to topological trigger and muon trigger object multiplicity to Central Trigger Processor (CTP)
- **Use of the SoC:**

  Configuration, control and monitoring of the board:
  - Hardware control of clock, power, and optical modules and configuration of FPGAs
  - Run control of processing FPGAs: read/write status/control registers and memories/LUTs
  - Current prototype with Zynq SoC, build a new prototype with Zynq Ulrascale+ MPSoC

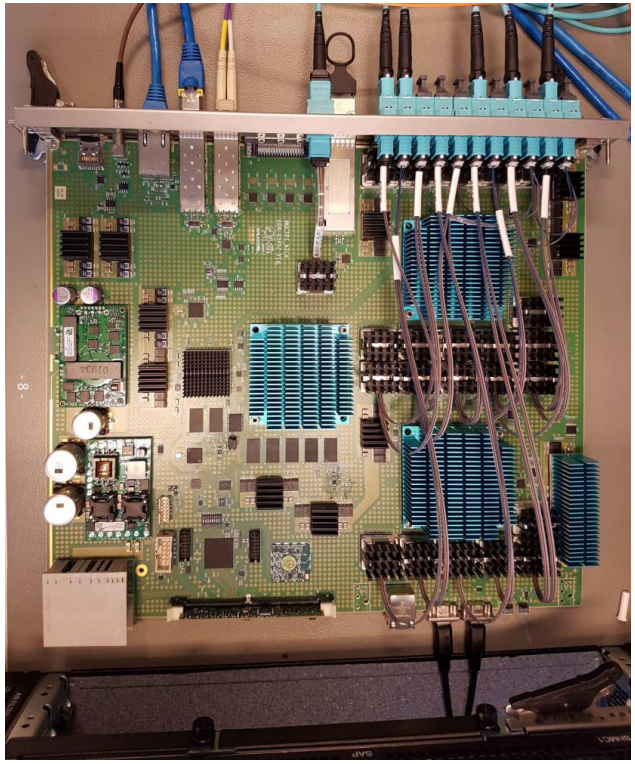

An alternative model: System-on-Chip

System-on-Chip:

Processor system + Programmable logic, *"CPU and FPGA"*

→ Xilinx Zynq:

Zynq SoC:	**ARM v7 (32-bit, 2 cores)**
Zynq Ultrascale+ MPSoC:	**ARM v8 (64-bit, 4 cores)**

- **Processor system (PS):** like CPU, multi-core ARM processors with memory and peripherals, e.g. GbEthernet, I2C, etc., can be run "bare-metal" with Xilinx software or using an operating system, e.g. Linux
- **Programmable logic (PL):** like FPGA, can interface to the processor FPGAs, using Xilinx AXI Chip-to-Chip protocol

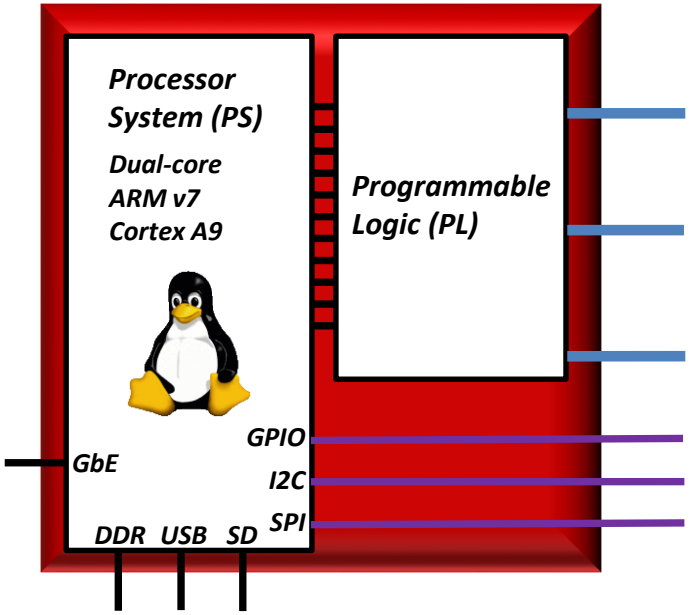

Operating System

Xilinx are providing Embedded Linux via the Yocto Project:

- Organised under the banner of the Linux Foundation
- Many hardware and software companies (~ 60) are members

Yocto Project Provides:

- Open-source software
- Complete build environment for different CPU architectures:
  - based on recipes: fetch sources, unpack, patch, configure, compile&link, package
  - recipes can derive from a class (super-recipe)
  - multiple recipes are organised in a layer
- A lot of software, including a reference distribution with a full Linux standard base:
  - ssh, NFS, python, command-line tools, etc.

Xilinx Layer Provides:

- Recipes to build toolchain for ARM: compiler, linker, system libraries (gcc)
- Kernel sources (from Xilinx) + Xilinx drivers
- Recipes to build kernel, device tree (from Vivado), rootfs, and bootloader (U-Boot)

Control application software:

- Two alternative approaches: RemoteBus and Run Control Application

Approach #1: RemoteBus (L1CT)

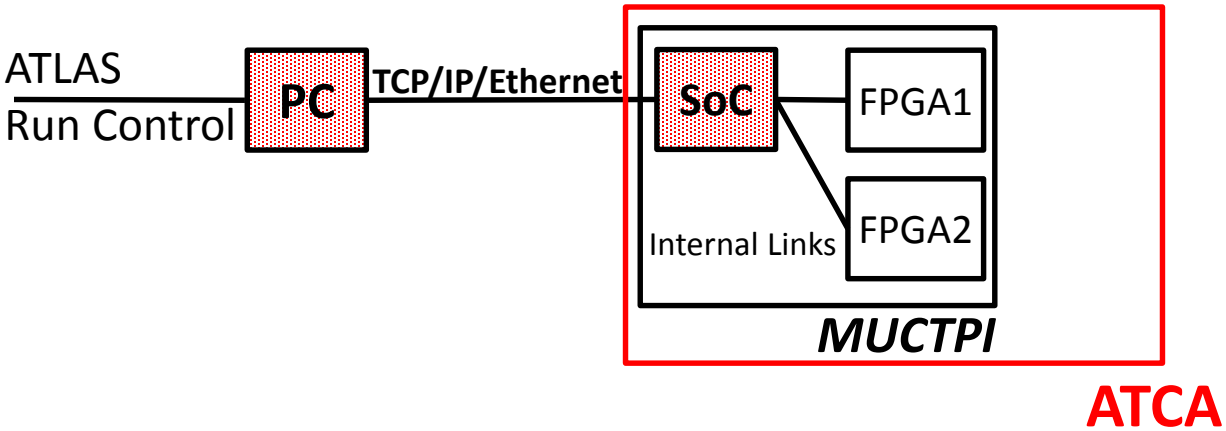

- The MUCTPI uses a **"System on a Chip" (SoC)** running embedded Linux and application software to respond to requests like **Remote Procedure Call (RPC)**
  ⇒ **decouple** low-level access to processing FPGAs and hardware from high-level run control application
- Use a client-server and request-response approach, TCP, and a synchronous approach:
  as before with VME, but allow multiple clients and multi-threaded server
- Provide several modes of working:
  - Single and block read/write functions (as before with VME)
  - Remote functions for more complex hardware access (like Remote Procedure Call, RPC), e.g. read/write I2C, SPI, JTAG, etc.
  - Queuing of several requests: bundle several requests before sending them together
    ⇒ mitigate latency overhead
- Extend functionality by using C++ inheritance for adding more complex functions
- Use Yocto framework for building RemoteBus software

MuctpiModule API

Implementation:

- **Two base classes, *Client*** and ***Server*,** implemented for communication between any two computers
- **Two derived classes, *MuctpiModuleClient*** and ***MuctpiModuleServer***, were implemented, requests were added for the MUCTPI hardware and FPGA memories: read/write from FPGAs (+ block), read/write I2C, read/write SPI, etc.
- Use with ***MuctpiModule* Application Programming Interface API Class** (C++):
  - **Encapsulates all hardware access, like, registers, memories, I2C, etc.**
  - Hardware access can be automatically generated from a register description (.xml)
  - Extend the *MuctpiModule* API using virtual class which allow on to run a) **locally on the SoC**, using low-level software, **or b) remotely using RemoteBus**

a) **Local**

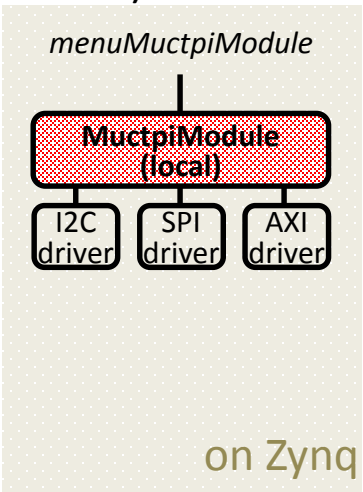

b) **RemoteBus**

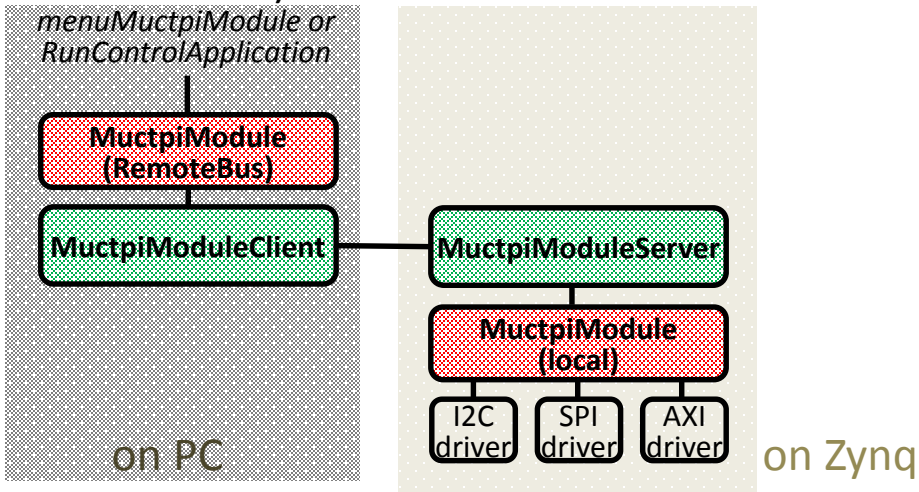

⇒ menu, test, and run control programs are transparent to the type of *MuctpiModule* class, i.e. local or RemoteBus

Approach #2: Run Control Application

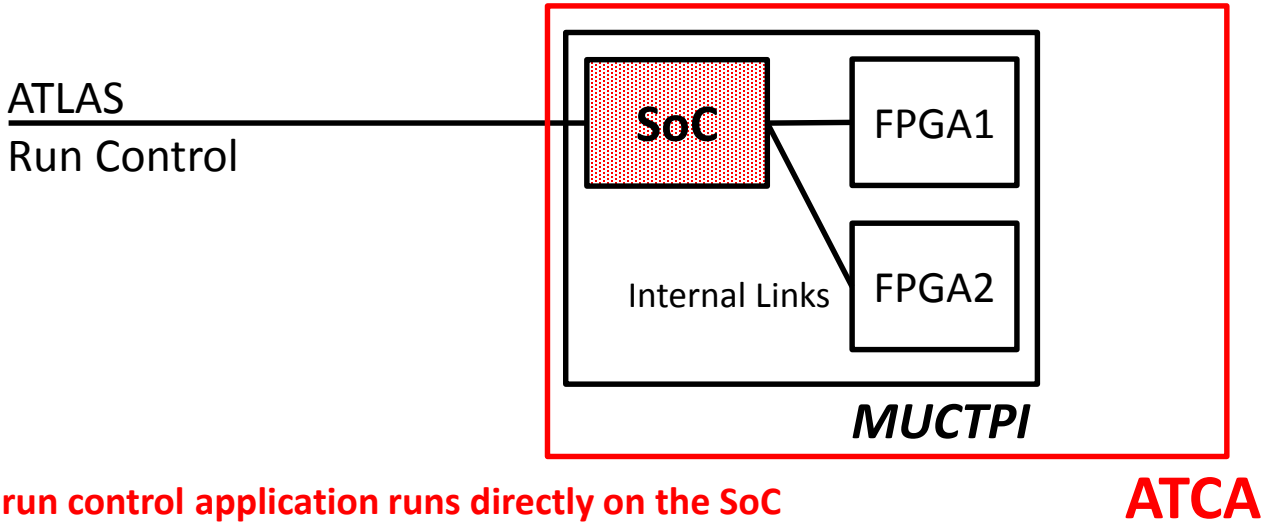

- The **TDAQ run control application runs directly on the SoC**
  No intermediate PC, nor process, nor "protocol converter"
  ⇒ **Need to port TDAQ software to ARM**
- **First go:** build TDAQ run control software within Yocto framework:
  ⇒ Difficult, required many patches to TDAQ CMake
- **Second go:** use Yocto to provide toolchain (compiler + libs), and use CMake with toolchain for cross-compilation:
  ⇒ Works much better, only few changes to CMake files, some put into TDAQ, some into top-level CMake file
- **Software ported (technical student project):**
  - **Needed some external packages** from WLCG (e.g. Boost, TBB): could be built directly in Yocto
  - **Needed to build ~40 packages** from ATLAS TDAQ software: no modification to sources, few changes to CMake (some will be included by TDAQ, some can be written in a dedicated top-level CMake file)
  - **Build additional software from WLCG: ROOT**:
    not really made for cross-compilation (yet); but works, and we are discussing with the developers to include cross compilation in the build

Approach #2: Run Control Application

Result:

A working run control application running on the Zynq:

- responds to the run control state transitions
- reads configuration data
- provides monitoring information to Information Service (IS)

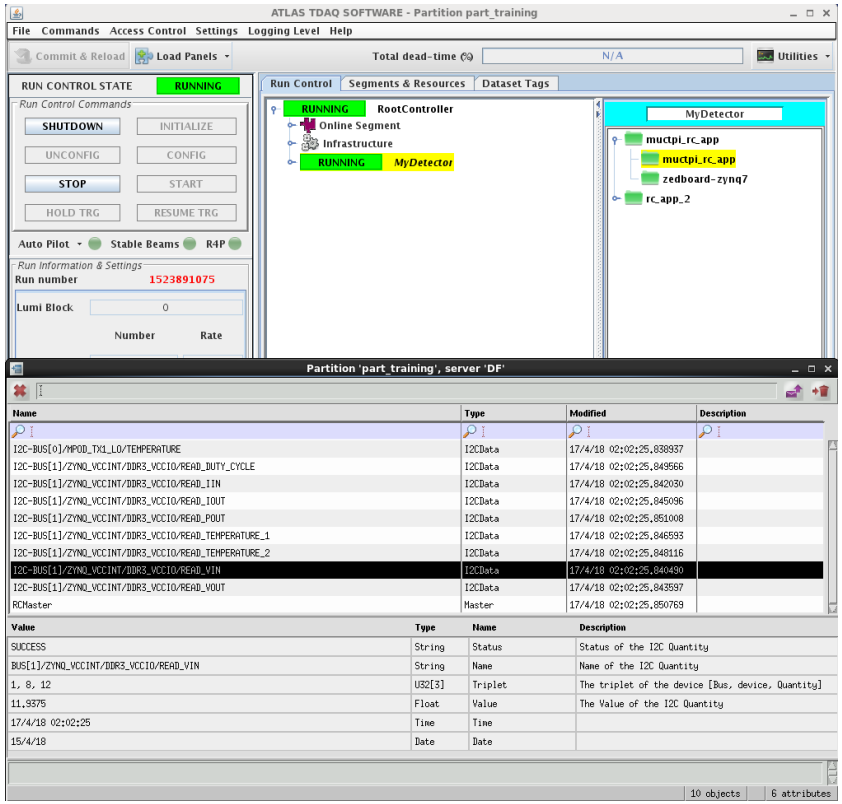

- provides ROOT histograms to Online Histogram (OH) service

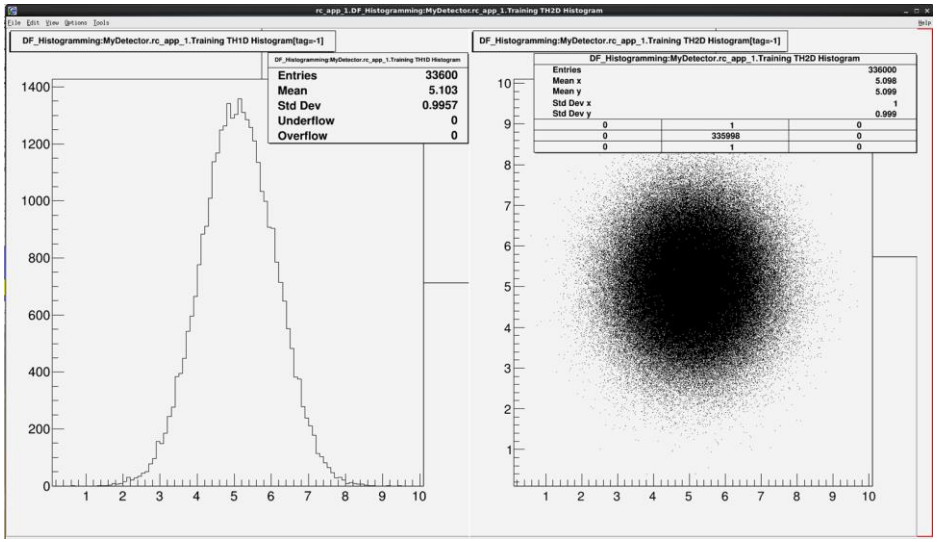

Outlook

Use of CentOS:

→ ***It might help if we can agree on common platform, e.g. CentOS/ARM***

→ ***CentOS is gaining speed in the ARM user community, it is being used at CERN's techlab***

→ ***For the Zynq, one could deploy CentOS/ARM (or a stripped down version):***

- ***The kernel is hardware-specific*** *(for the Xilinx Zynq), because of the drivers and the device tree required by Xilinx and/or custom IP cores in the PL and/or required by different Vivado versions*
- ***The decoupling is achieved at the level of the system libraries****, i.e. glibc etc.*
- ***The application software is built on top of CentOS*** *(and system libraries)*

⇒ ***ATLAS AFP ROD (SLAC) have started investigating this approach,***
ATLAS MUCTPI (CERN) are also interested:

Porting of run control application to ARM could become much simpler if used with CentOS,
could possibly build run control application natively on CentOS/ARM and use it from NFS,
and it could become even more simpler if LCG and TDAQ were built for CentOS/ARM

SoC Interest Group

Yesterday at ACES 2018 workshop, I suggested to create an interest group:

"System-on-Chip for Electronics"

→ Mailing list: system-on-chip@cern.ch

⇒ Exchange information, suggestions, questions, …

⇒ Could organise regular meetings (1-2 times per year?) …

Build intelligent control into the ATCA blade!