Central exclusive production at LHCb

Melody Ravonel Salzgeber
on behalf of the LHCb collaboration

Run 1 (2011-2012)	$\sqrt{s}$	Collision	Reference paper
J/ψ, $\psi(2S)$ photoproduction	7 TeV	pp	JPG 41(2014) 055002
Υ photoproduction	7-8 TeV	pp	JHEP 1509(2015) 084
Double charmonium production	7-8 TeV	pp	JPG 40(2013) 045001
χ_c production	7 TeV	pp	LHCb-CONF-2011-022
QED dimuon production	7 TeV	pp	LHCb-CONF-2011-022

update of preliminary result: LHCb-CONF-2016-007
about to be released in a paper

Run 2 (2015)			
J/ψ, $\psi(2S)$ photoproduction	13 TeV	pp	LHCb-PAPER-2018-011
J/ψ photonuclear production	5 TeV	PbPb	LHCb-CONF-2018-003

in this talk

CEP elastic processes:

$pp(\bar{p}, A) \to p + X + p(\bar{p}, A)$ or $AA \to A + X + A$

t-channel exchange of a colourless object

γ, pomeron $\to$ X + rapidity gaps

di$-\gamma$ fusion

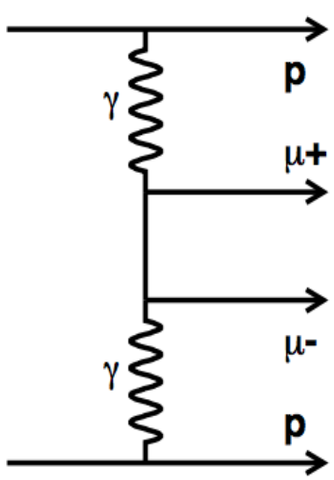

$\mu^+\mu^-, e^+e^-, \pi^+\pi^-, W^+W^-, ...$

di-pomeron exchange

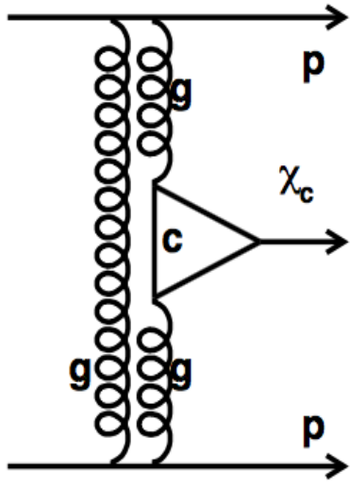

$\chi_c, \chi_b, \pi^+\pi^-, gg$, dijet, ...

$\gamma-$pomeron fusion

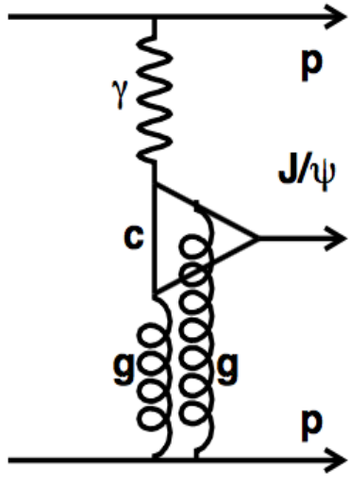

$\rho, J/\psi, \Upsilon, Z...$

Photonuclear production

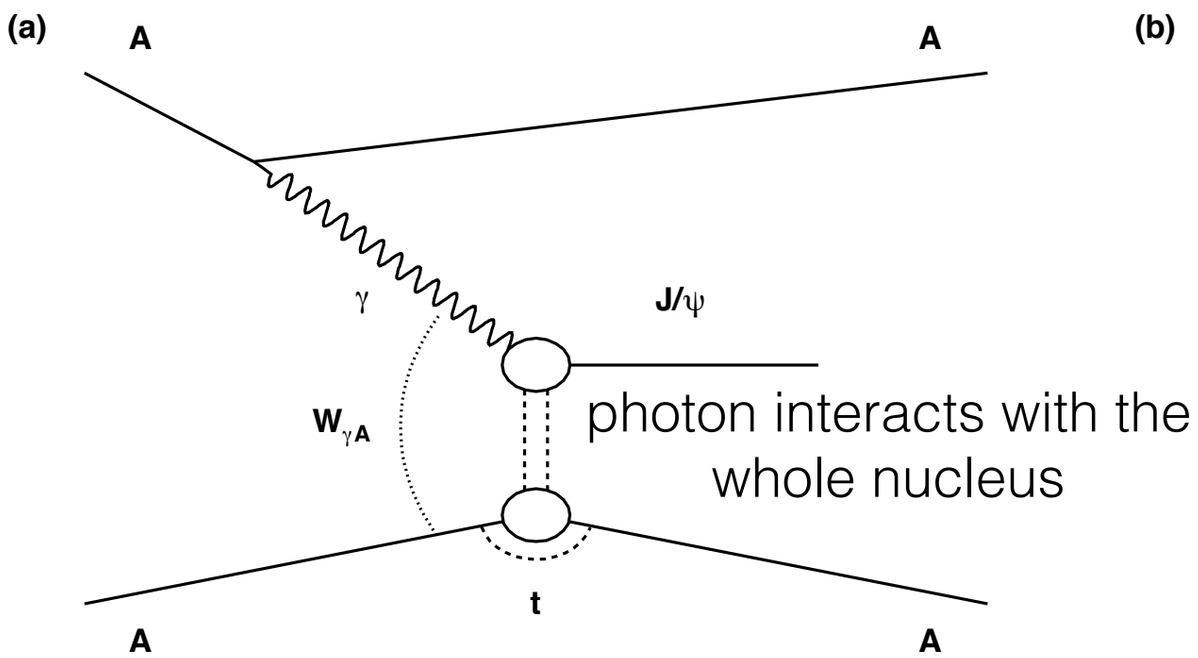

coherent photonuclear production

nucleus remain ~intact

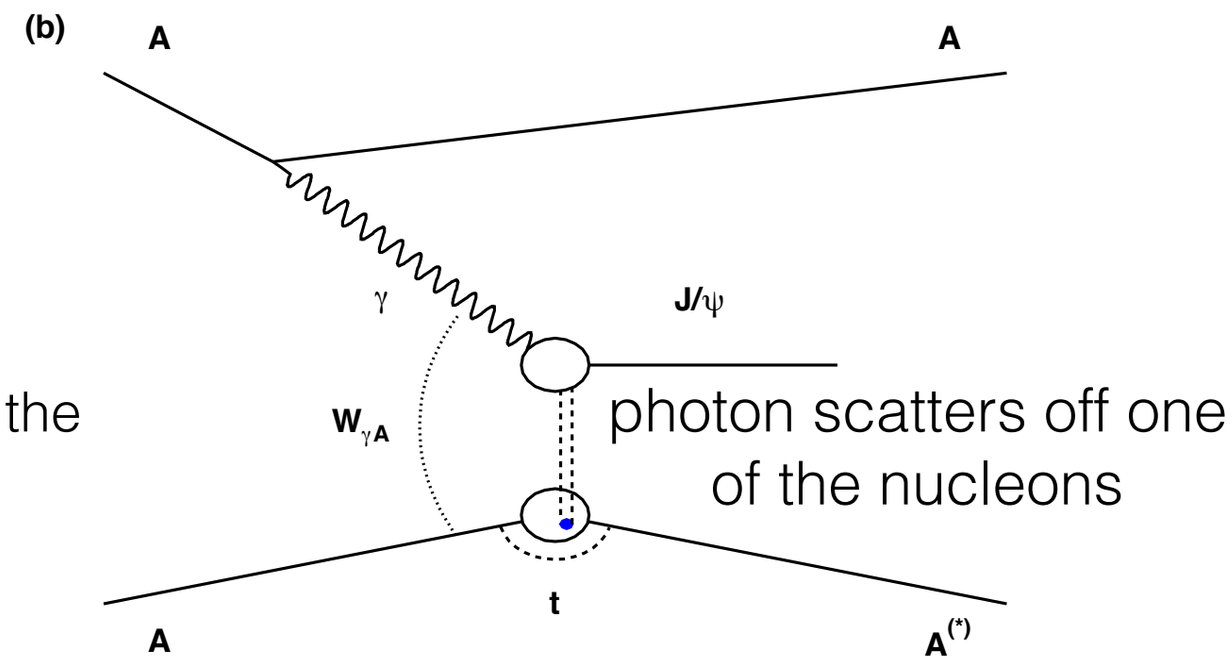

incoherent photonuclear production

nucleus changes

Phys. Rev. **C97** (2018) 024901.

The LHCb detector

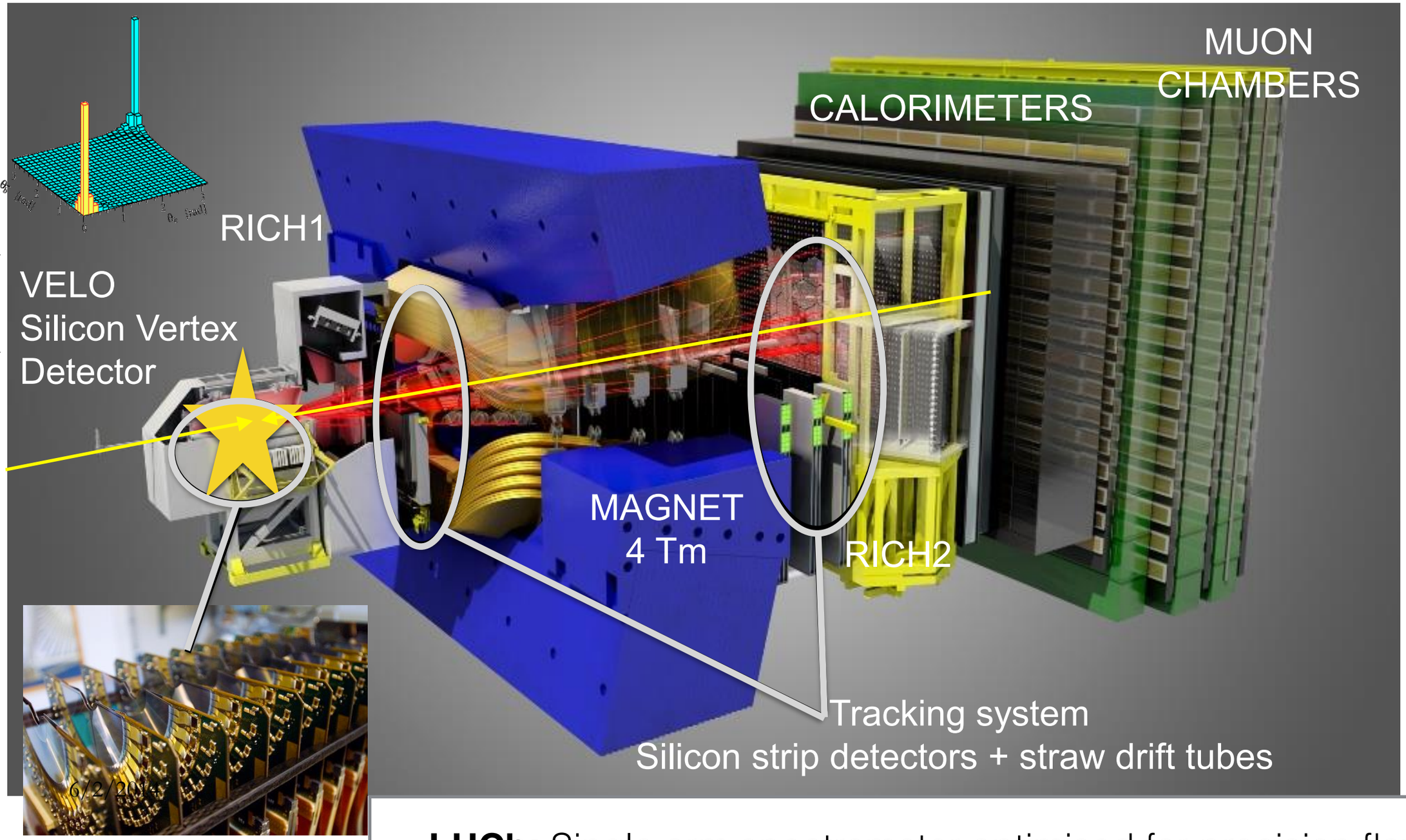

Int. J. Mod. Phys. **A30** (2015) 1530022

JINST **3** (2008) S08005

LHCb: Single arm spectrometer optimised for precision flavour physics

The LHCb detector

optimal	$\mu, p, K, \pi^{\pm}$ produced inside the VELO
good	$K_S^0, \Lambda^0, \gamma, e, \pi^0$
challenging	stable neutral hadrons: n, K_L^0

Excellent muon identification $\epsilon \approx 97\%$, mis-ID $\approx 0.7\%$ at high p_{T}

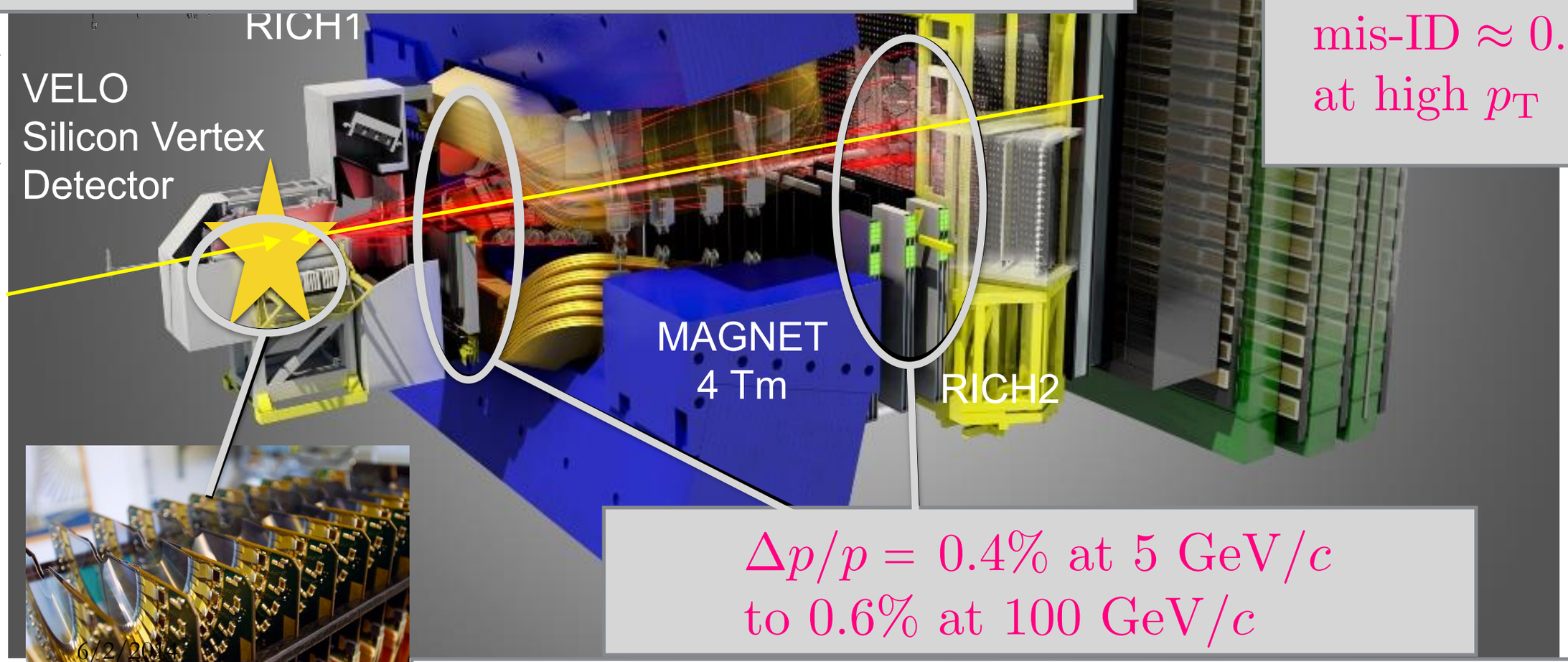

$\Delta p/p = 0.4\%$ at 5 GeV/c to 0.6% at 100 GeV/c

Int. J. Mod. Phys. **A30** (2015)

JINST **3** (2008) S08005

LHCb: Single arm spectrometer optimised for precision flavour physics

fully instrumented in $2 < \eta < 5$, partial coverage for $-3.5 < \eta < -1.5$

Different experimental signature

LHCb coverage

η of particle, primary protons

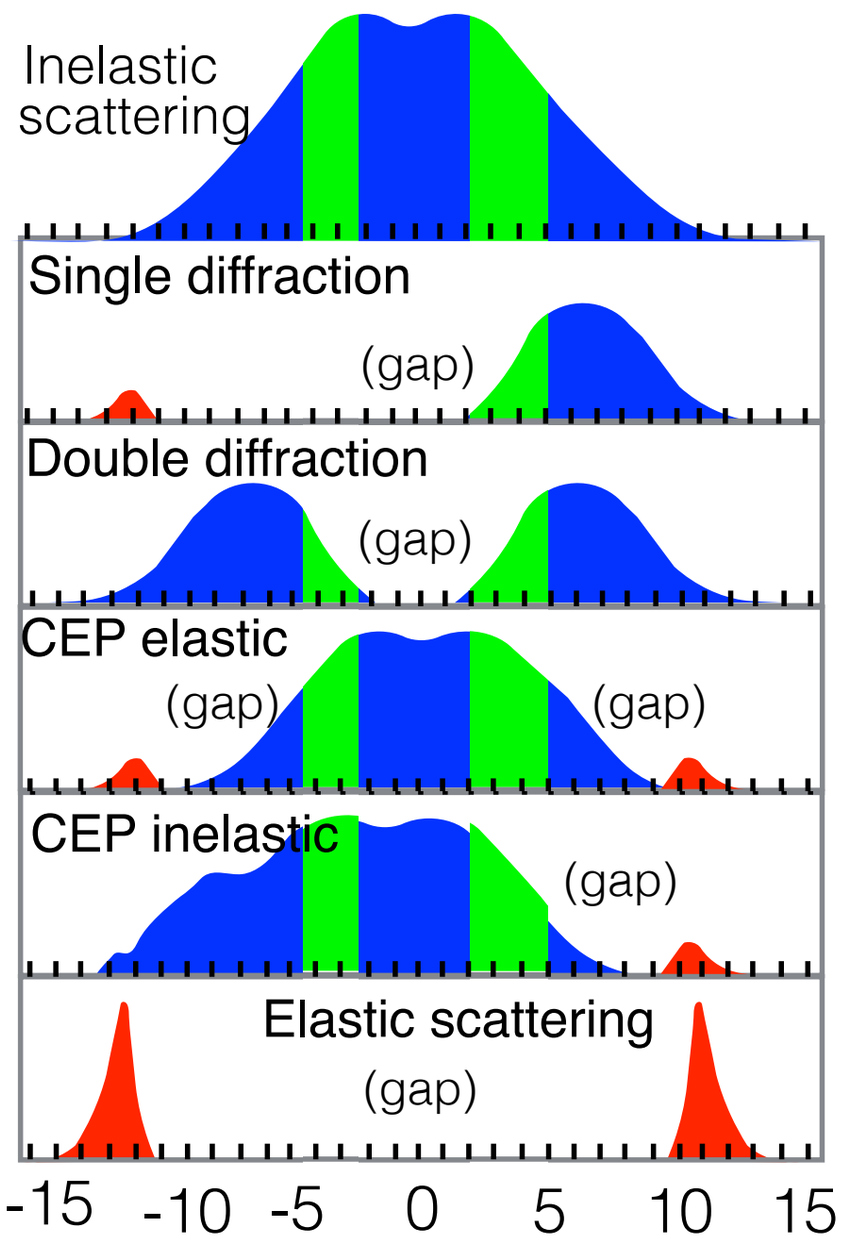

After D. d'Enterria arxiv 0806.0883

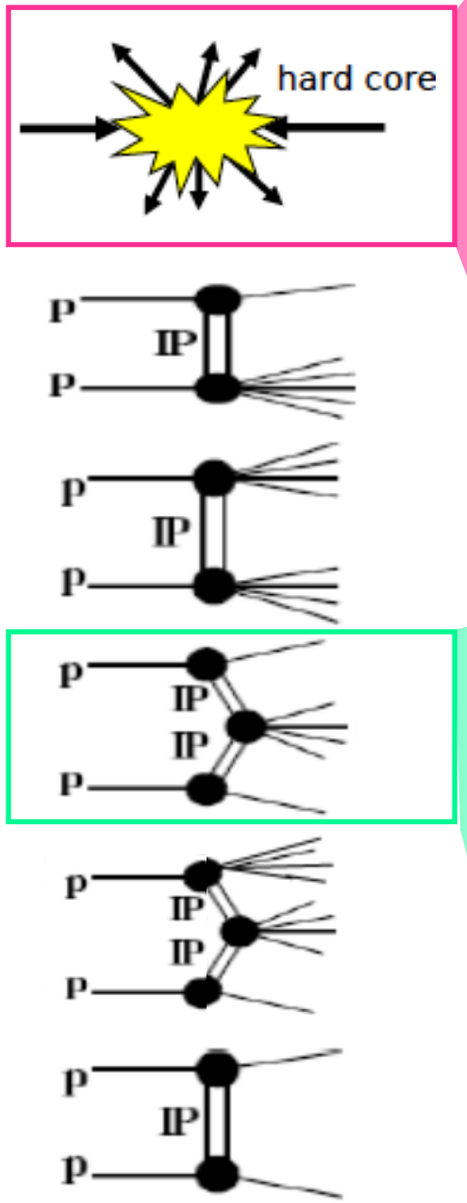

Example of LHCb events

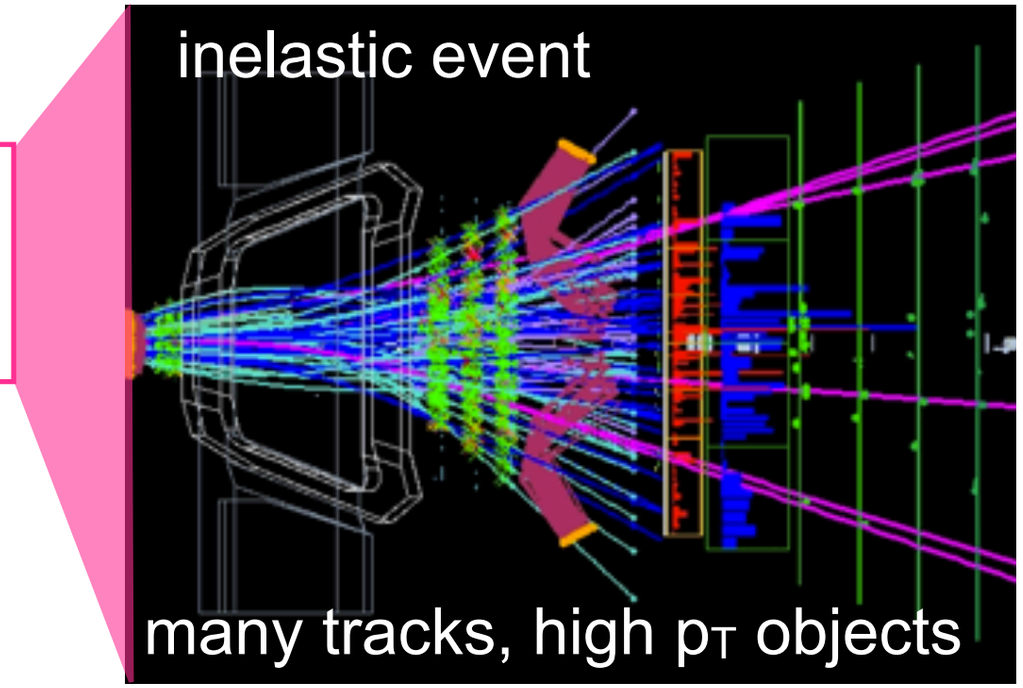

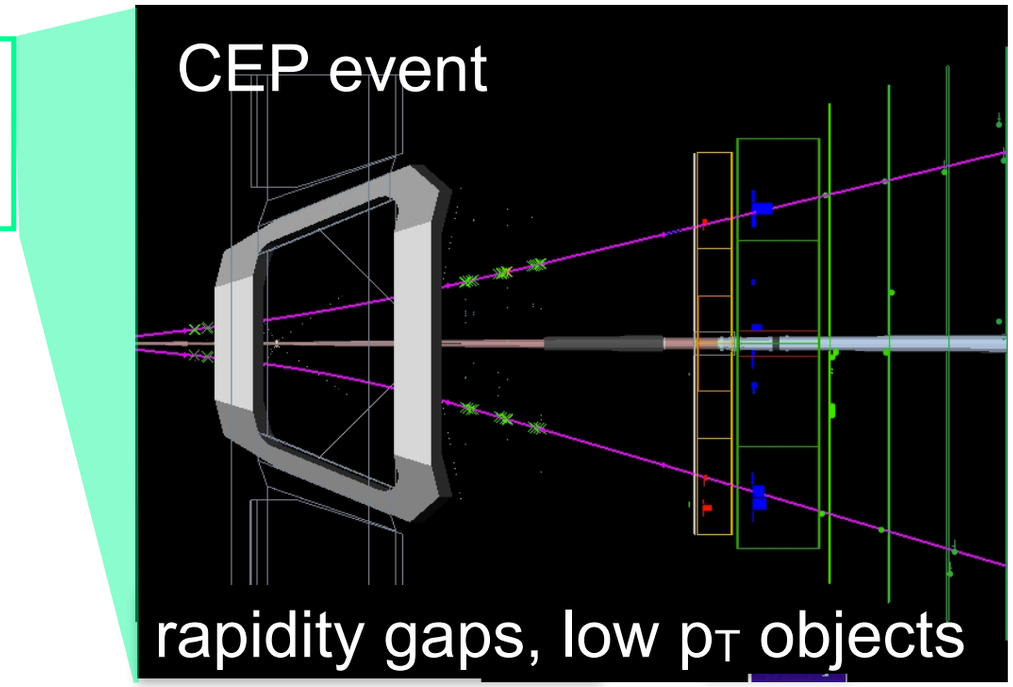

HeRSCheL detector = High Rapidity Shower Counter for LHCb

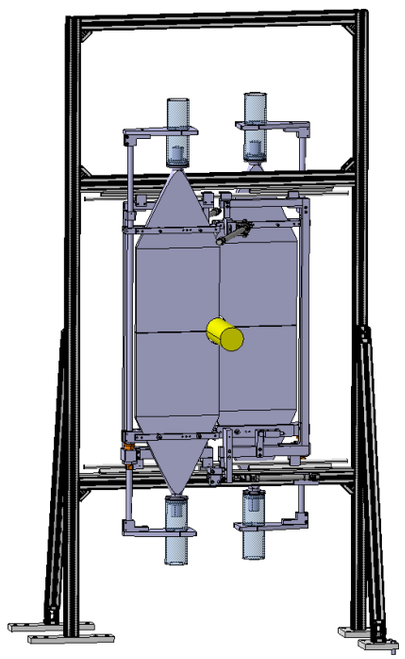

- Increase pseudo-rapidity coverage
  - ➡ to reduce background in CEP analyses
- 5 retractable stations:
  - with 20 scintillating shower counters
- Detect showers from high rapidity particles interacting with the beam-pipe elements

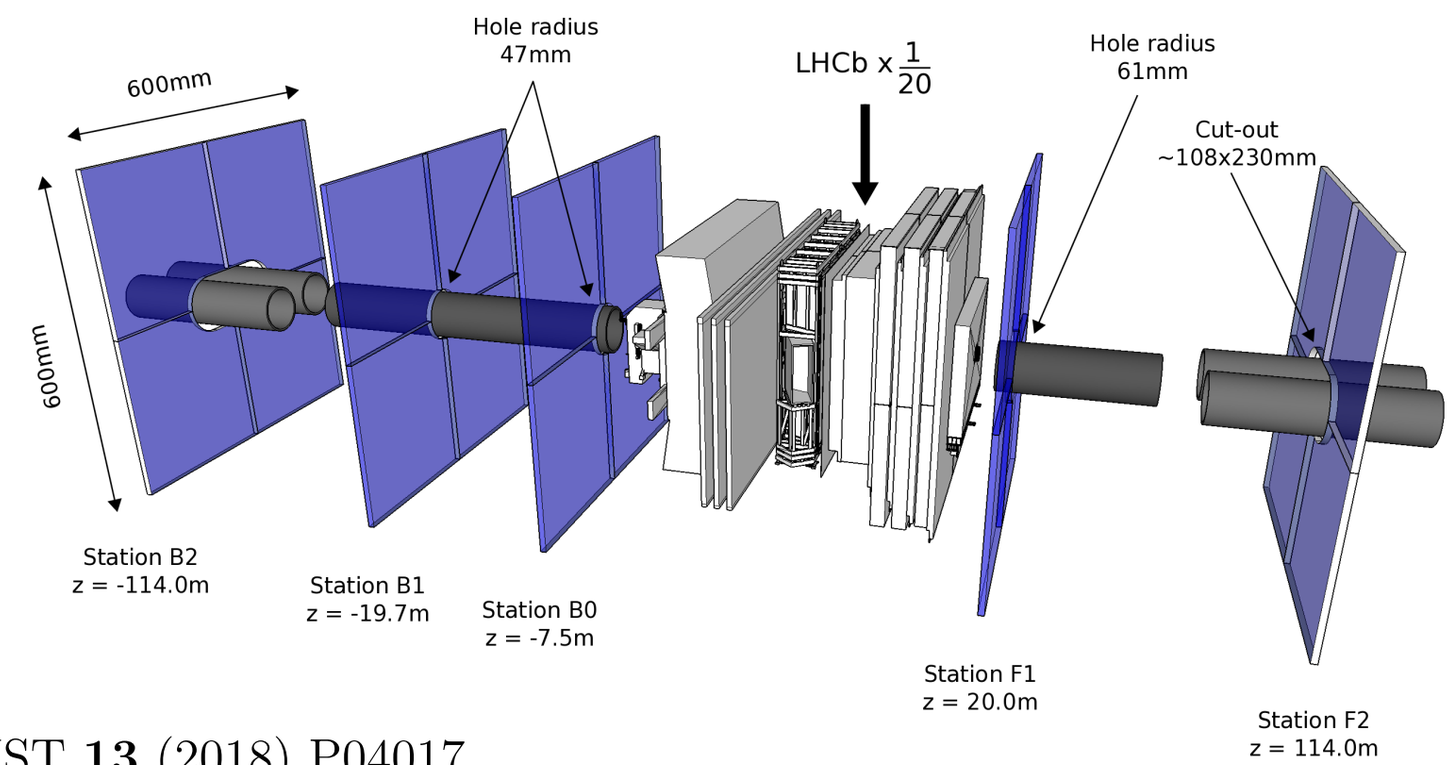

JINST **13** (2018) P04017

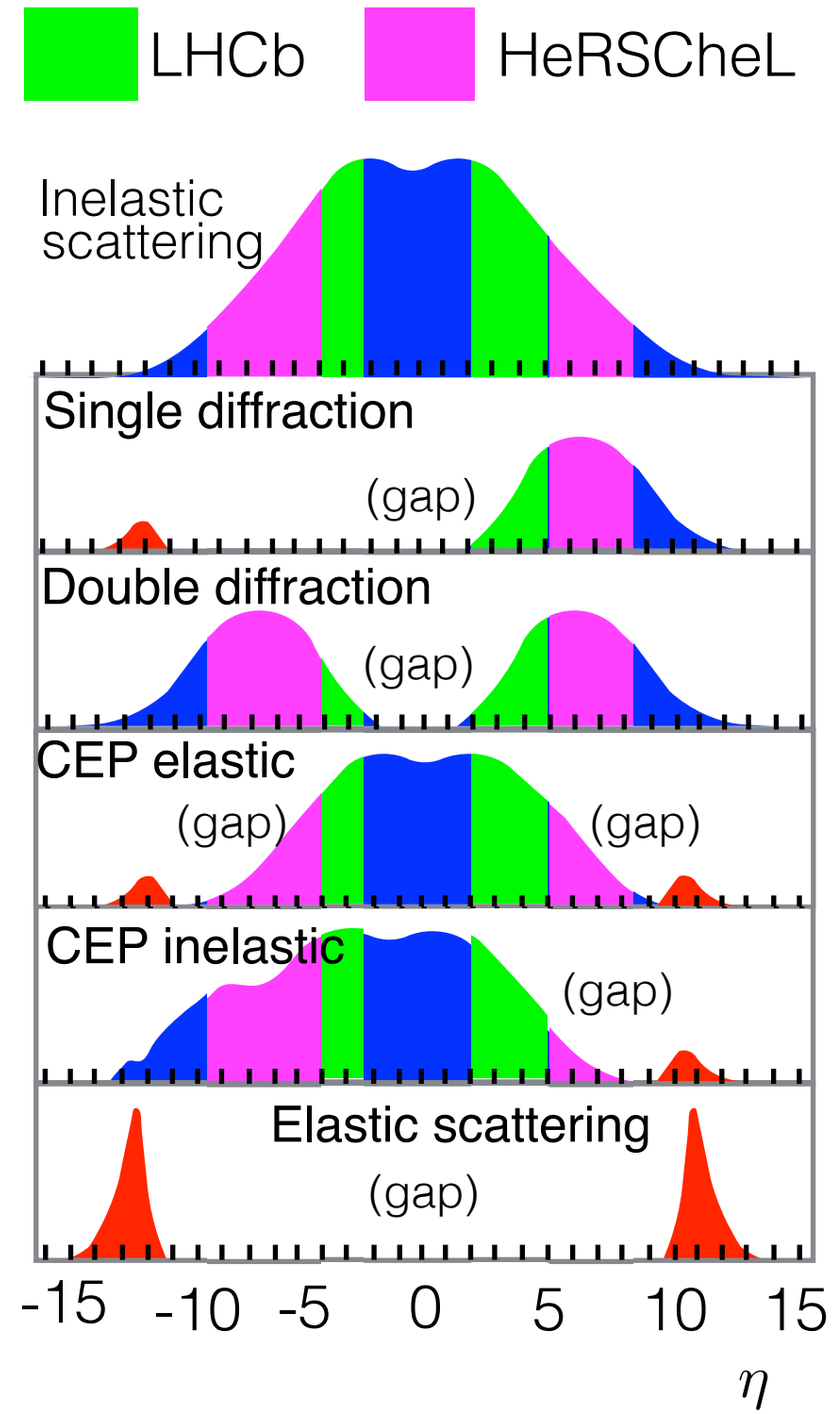

HERSCHEL signal

1 station signal

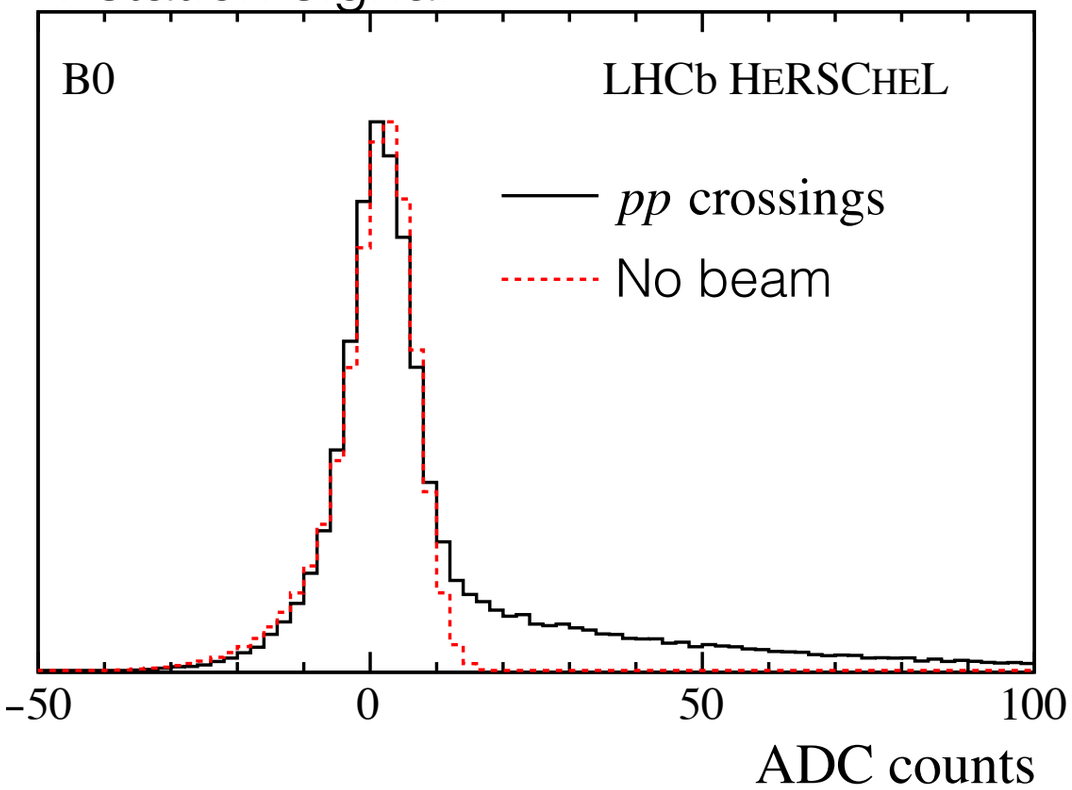

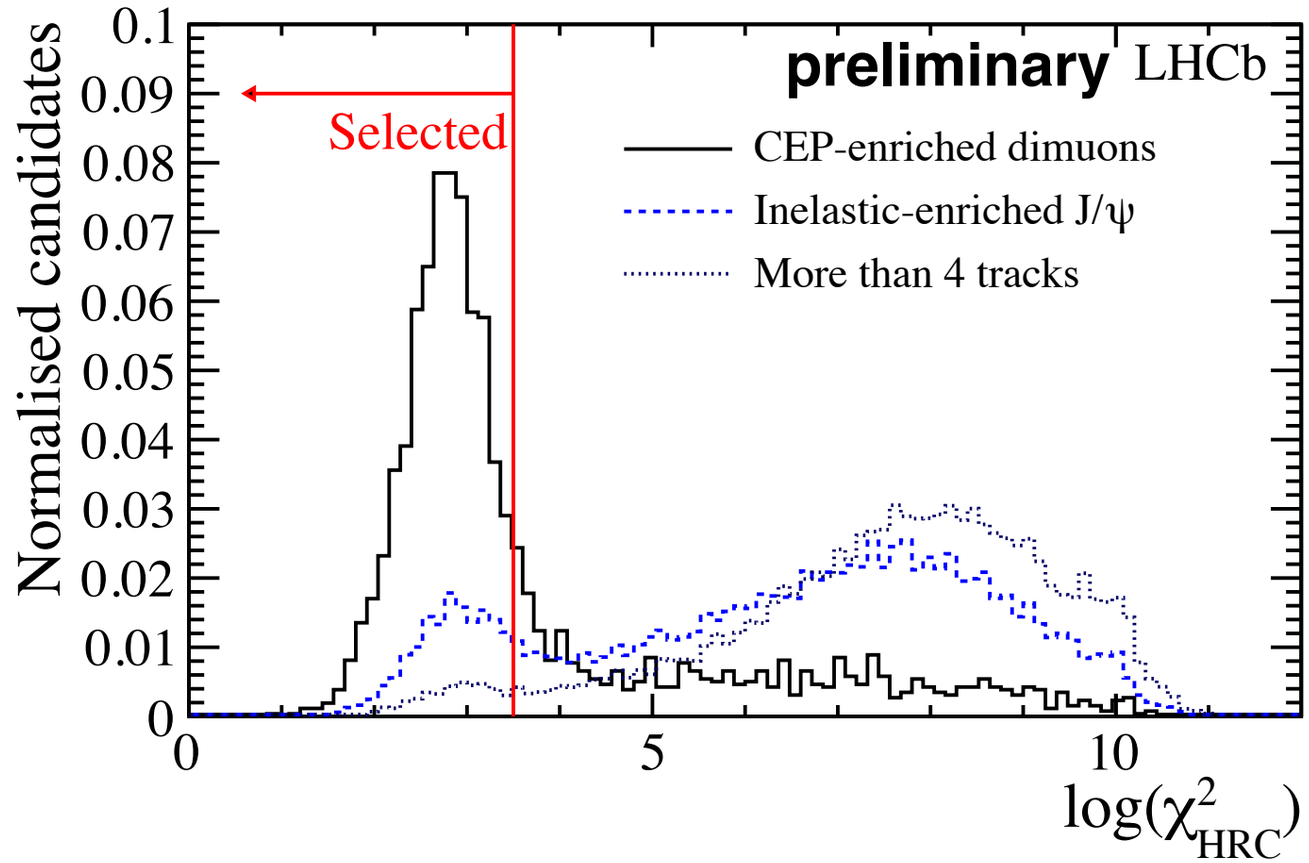

- Clean pedestals

➡ Herschel can reject extra activity !

- Herschel activity above noise described by $\log(\chi^2_{\mathrm{HRC}})$ (takes account of the correlations between counters)

- Response checked against 3 classes of events
- Clear signal/background enhancement

Exclusive event selection ($pp \to p + \mu^+\mu^- + p$)

- 2 reconstructed muons with $2 < \eta < 4.5$
- No additional tracks or energy
- Within 65 MeV/c^2 of the $M_{J/\psi}$
- HERSCHEL VETO
- $p_T^2 < 0.8$ GeV^2

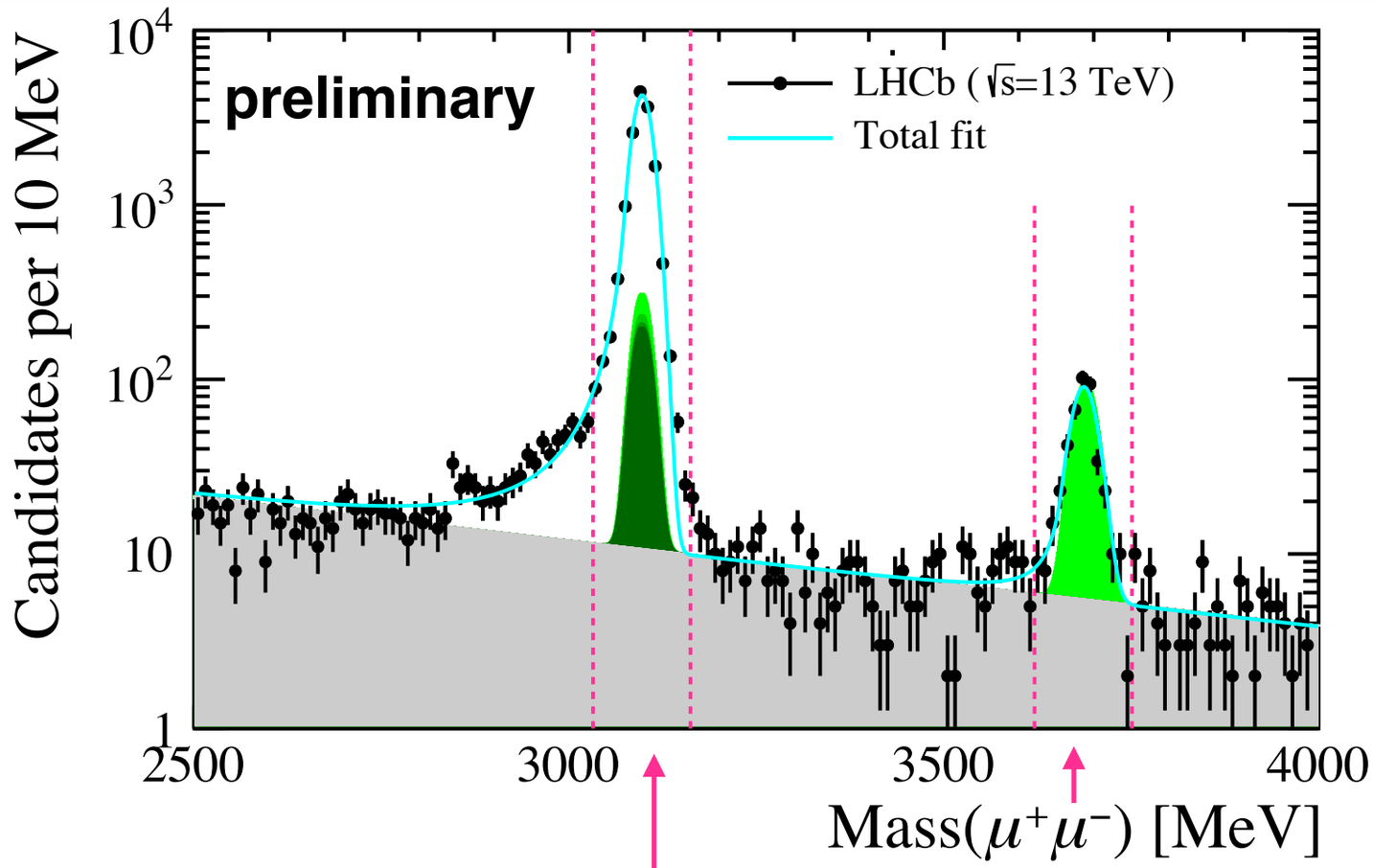

- **Signal**

CEP γ-prod. J/ψ

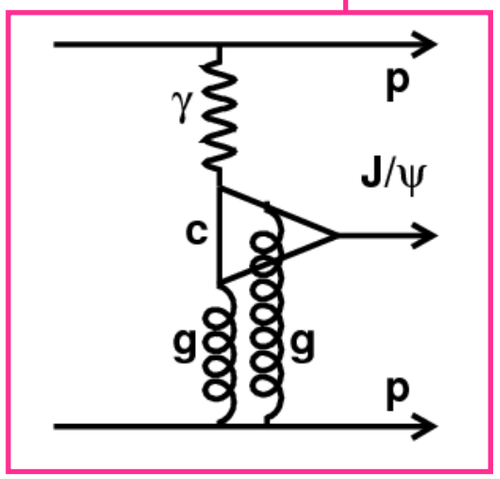

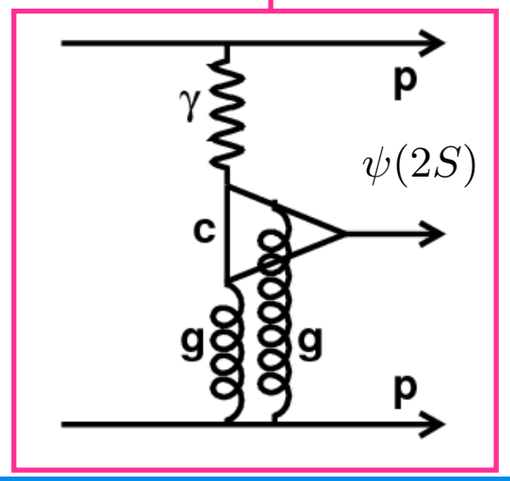

CEP γ-prod. ψ (2S)

Exclusive event selection ($pp \to p + \mu^+\mu^- + p$)

- 2 reconstructed muons with $2 < \eta < 4.5$
- No additional tracks or energy
- Within 65 MeV/c^2 of the $M_{J/\psi}$
- HERSCHEL VETO
- $p_T^2 < 0.8$ GeV^2

Continuum lepton pair production
➡ **Non Resonant Background**
EM CEP(QED)

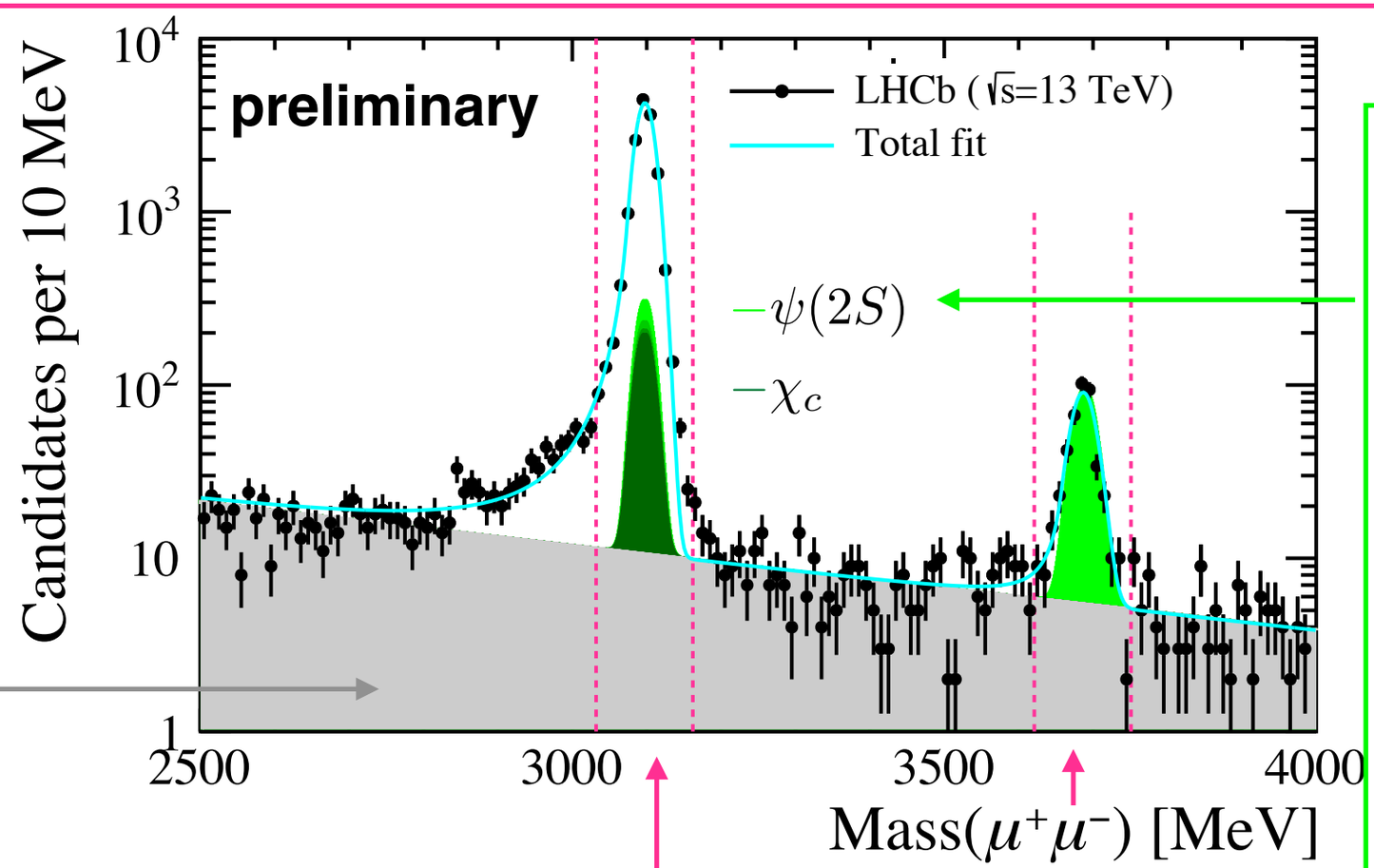

$\psi(2S)/\chi_c$
Feed-down Background
when remaining particles produced in association with the J/ψ remains undetected or goes outside detector

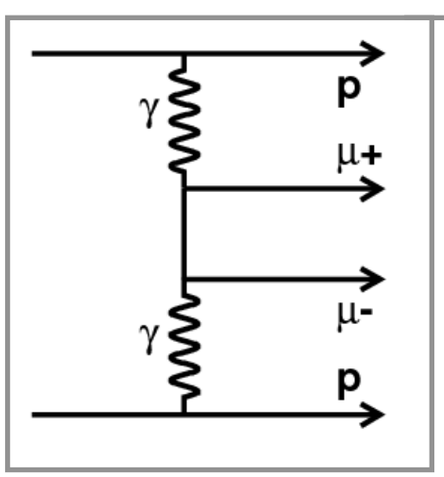

- **Signal**

CEP
γ-prod.
J/ψ

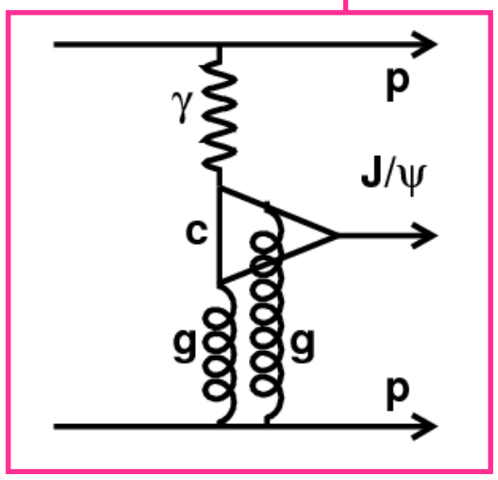

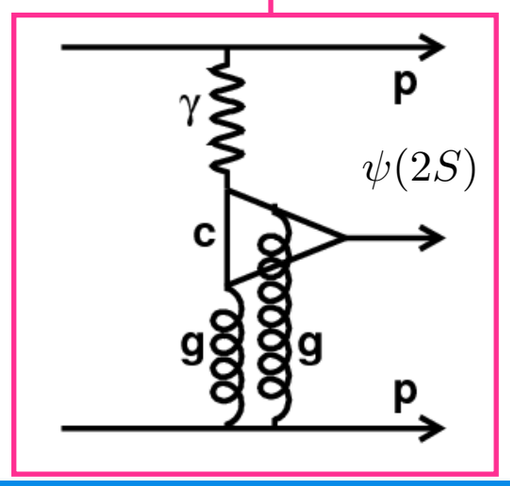

CEP
γ-prod.
ψ (2S)

Proton dissociation background for $pp \to p + J/\psi$ or $\psi(2S) + p$

- **Inelastic production of mesons**
  where one or more protons dissociate or emit a gluon

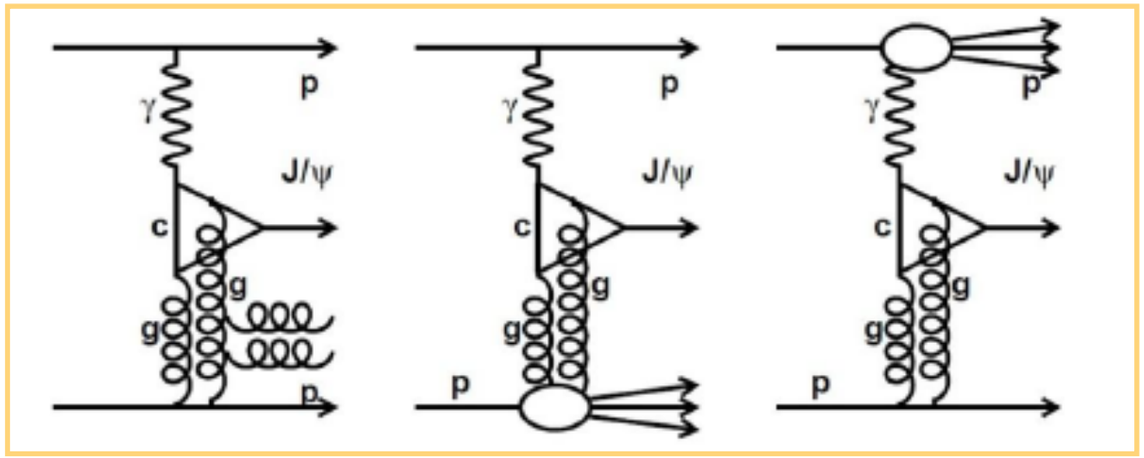

2 ways to extract the proton dissociation background:

- fit data with ***2 exponential*** (one for the signal and one for the pr. diss. bkg)
- use the two independent sample below and above HERSCHEL veto to constrain the background ***(new, more in backup)***

=> possible thanks to HERSCHEL!

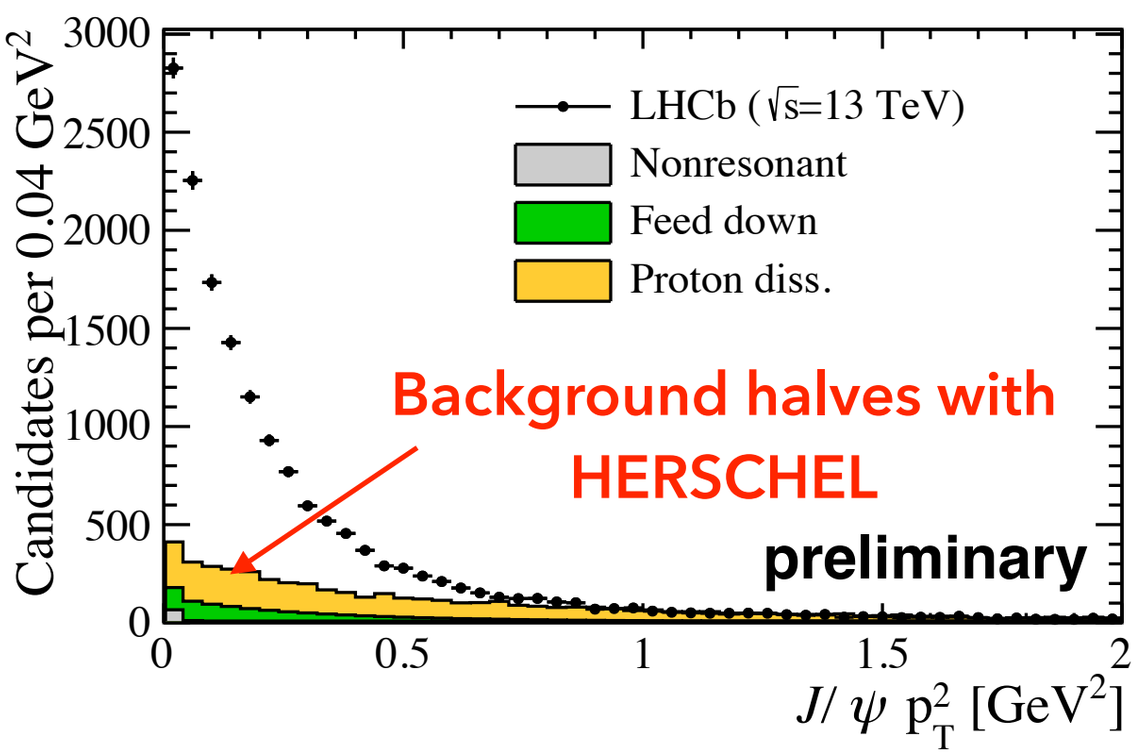

No HERSCHEL veto applied

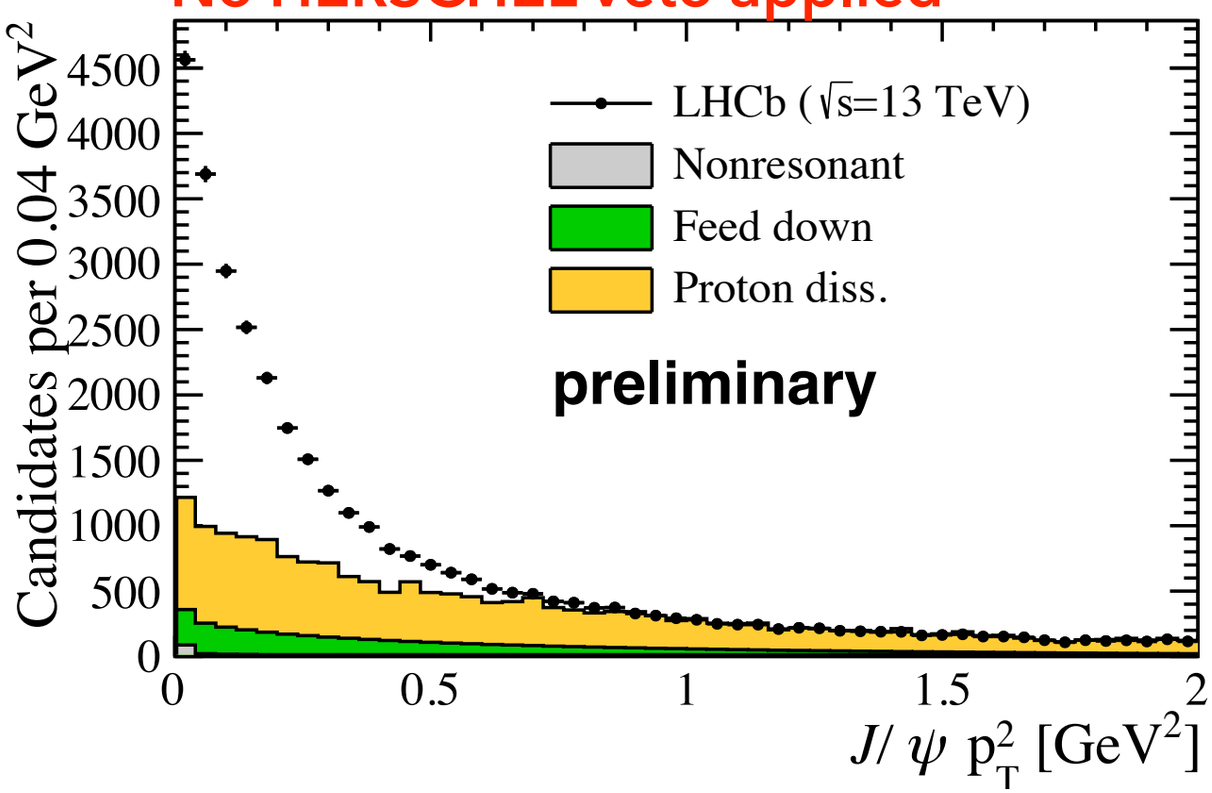

Proton dissociation background for $pp \to p + J/\psi$ or $\psi(2S) + p$

- **Inelastic production of mesons** where one or more protons dissociate or emit a gluon

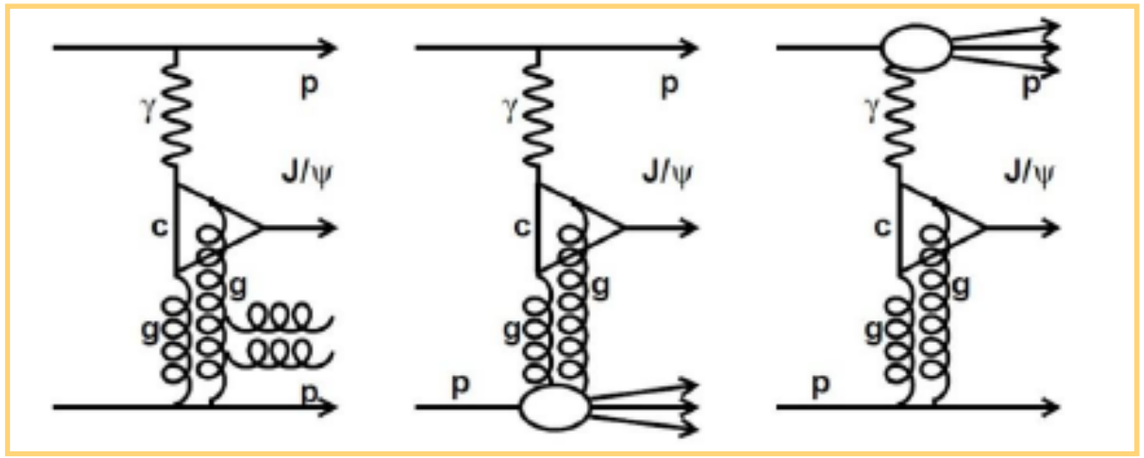

2 ways to extract the proton dissociation background:

- fit data with ***2 exponential*** (one for the signal and one for the pr. diss. bkg)
- use the two independent sample below and above HERSCHEL veto to constrain the background ***(new, more in backup)***

=> possible thanks to HERSCHEL!

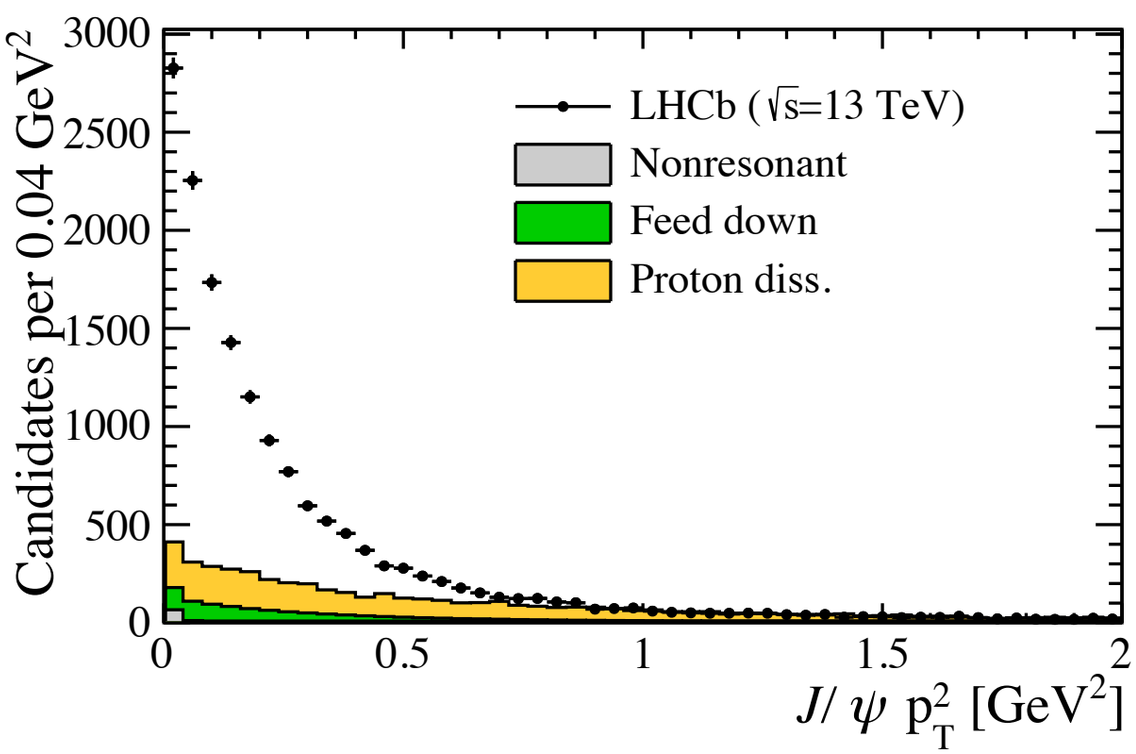

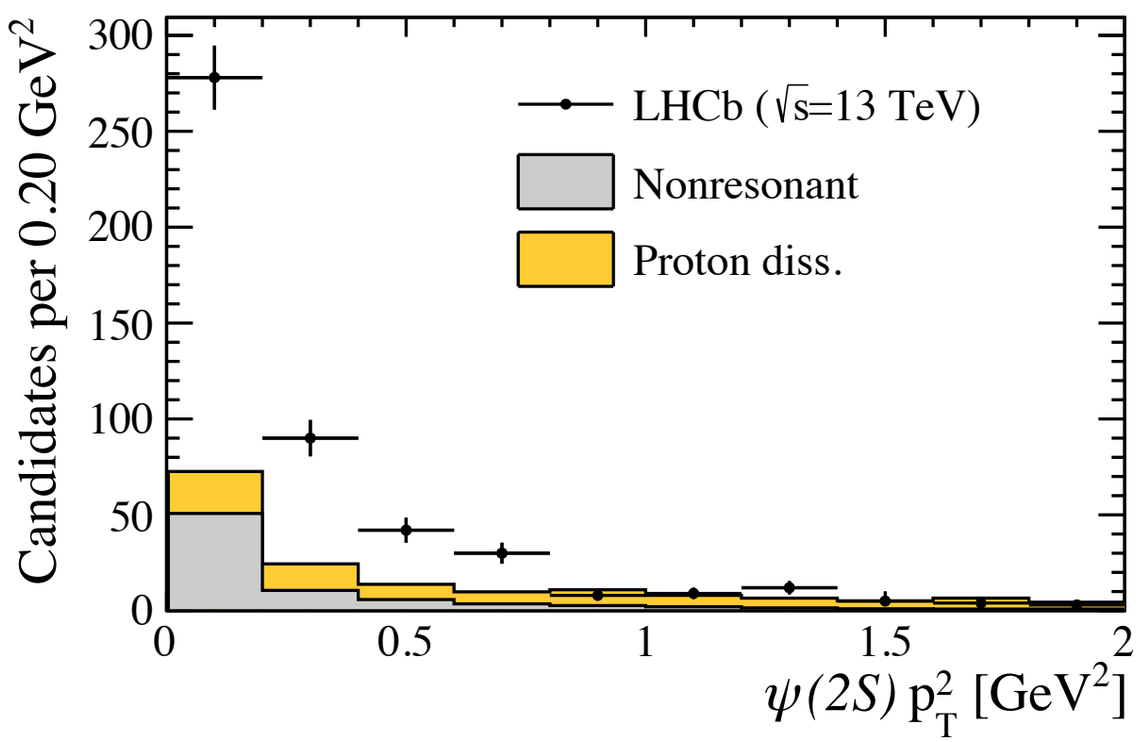

Signal extracted with the second method and fit with a single exponential
Good agreement is found with expectation of
Regge theory (Phys. Lett. **B348** (1995) 213)!

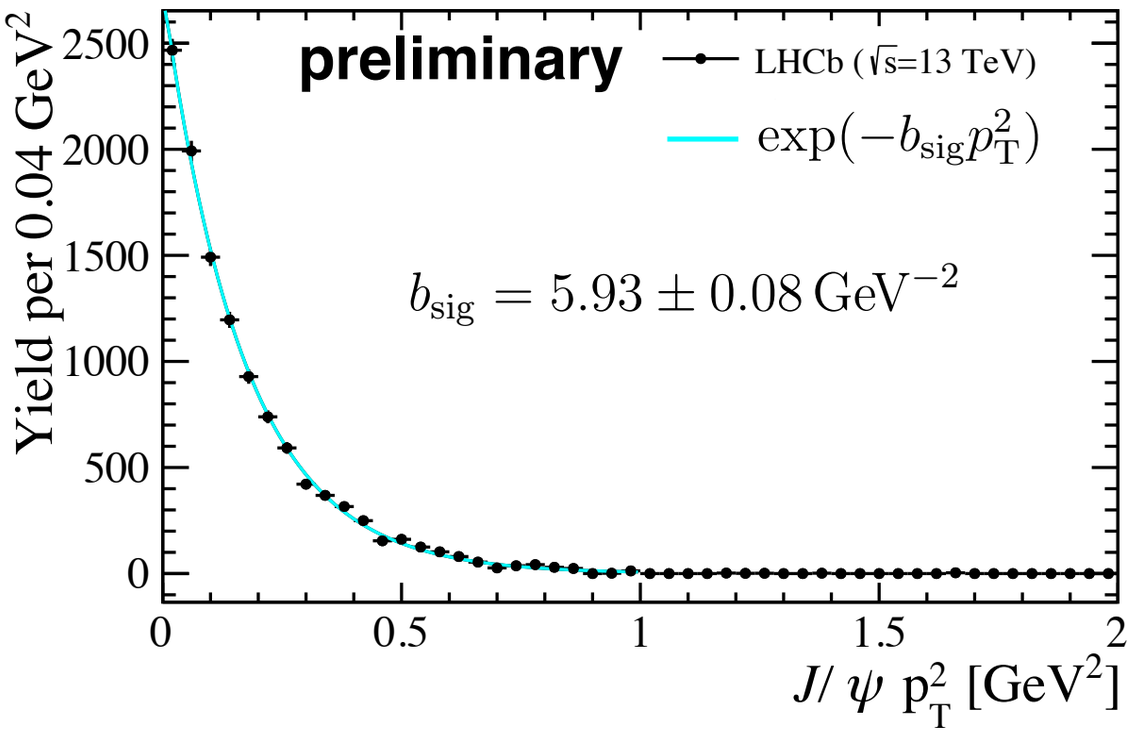

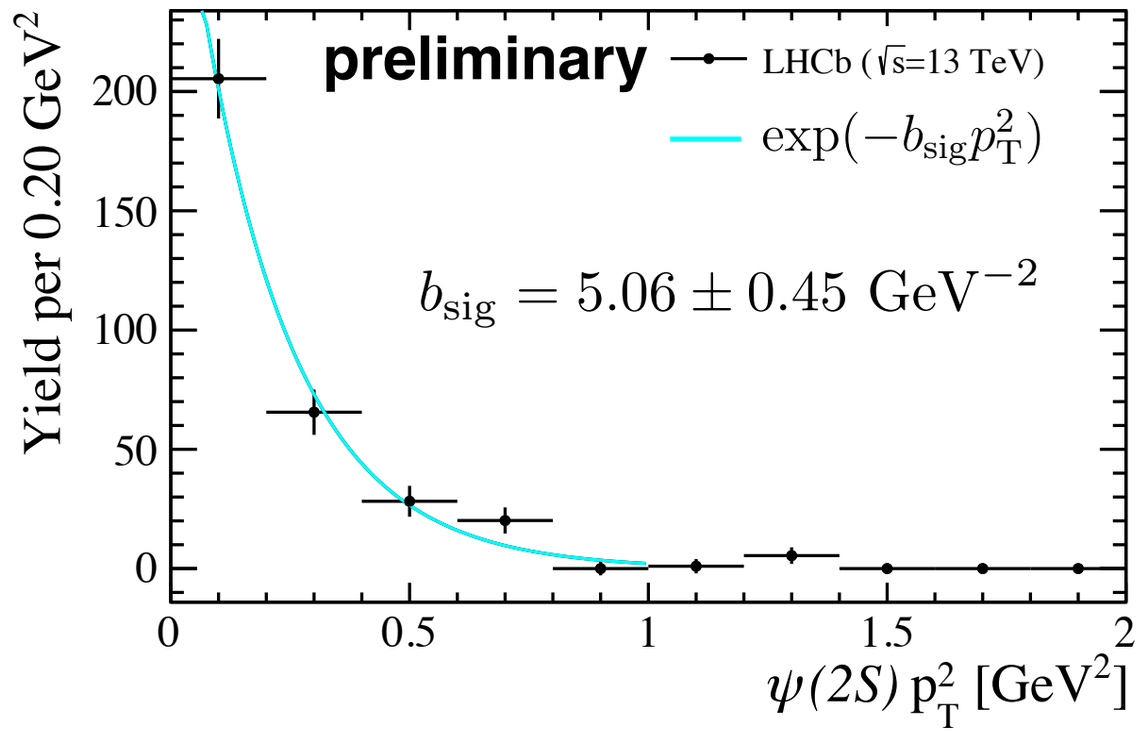

signal purity: 0.755 ± 0.015 for J/ψ and 0.72 ± 0.061 for $\psi(2S)$

Exclusive event selection ($\mathrm{PbPb} \to \mathrm{Pb} + \mu^+\mu^- + \mathrm{Pb}$)

- 2 reconstructed muons with $2 < \eta < 4.5$
- No additional tracks or energy
- Within 65 MeV/c^2 of the $M_{J/\psi}$
- J/ψ $p_{\mathrm{T}} < 1$ GeV/c
- Muon $p_{\mathrm{T}} > 0.5$ GeV/c

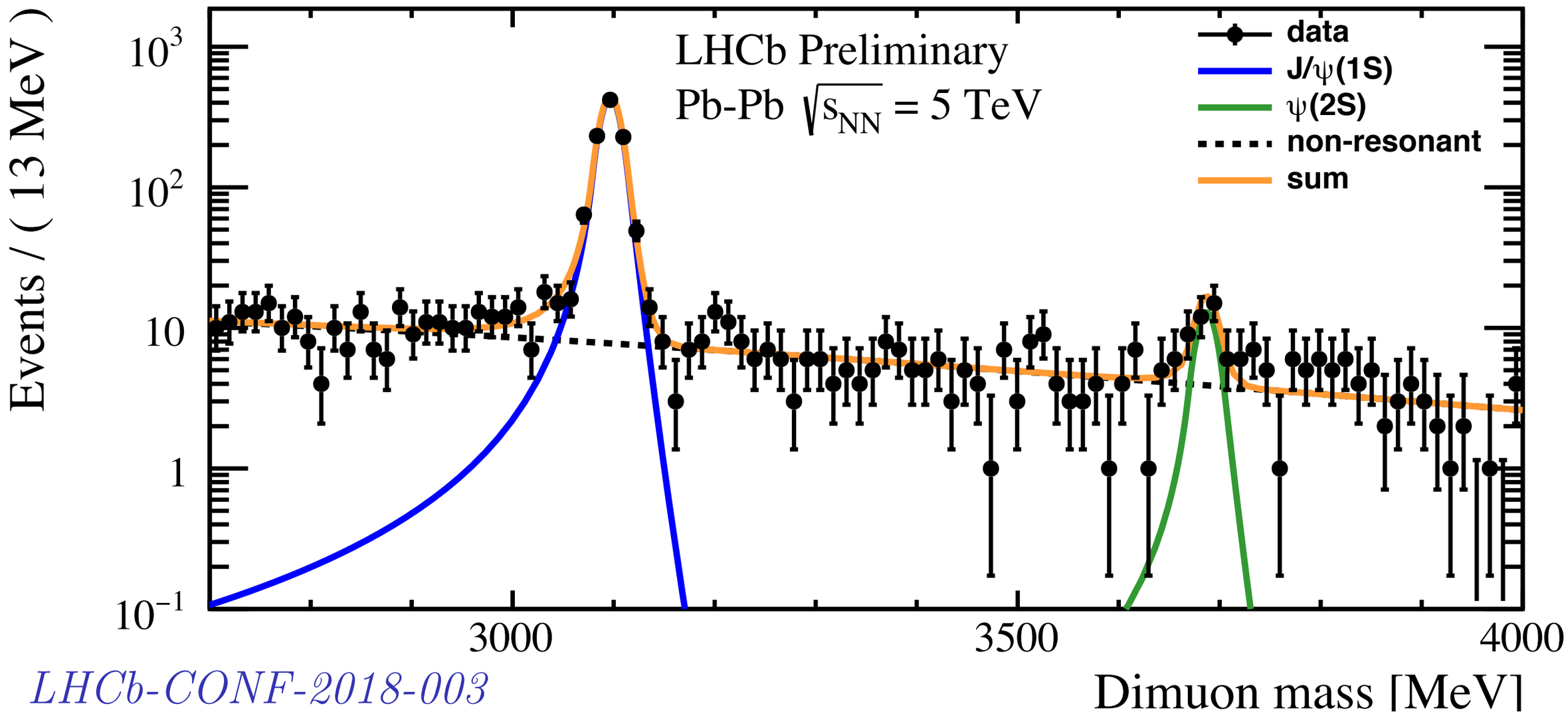

LHCb-CONF-2018-003

$\mathrm{PbPb} \to \mathrm{Pb} + J/\psi + \mathrm{Pb}$

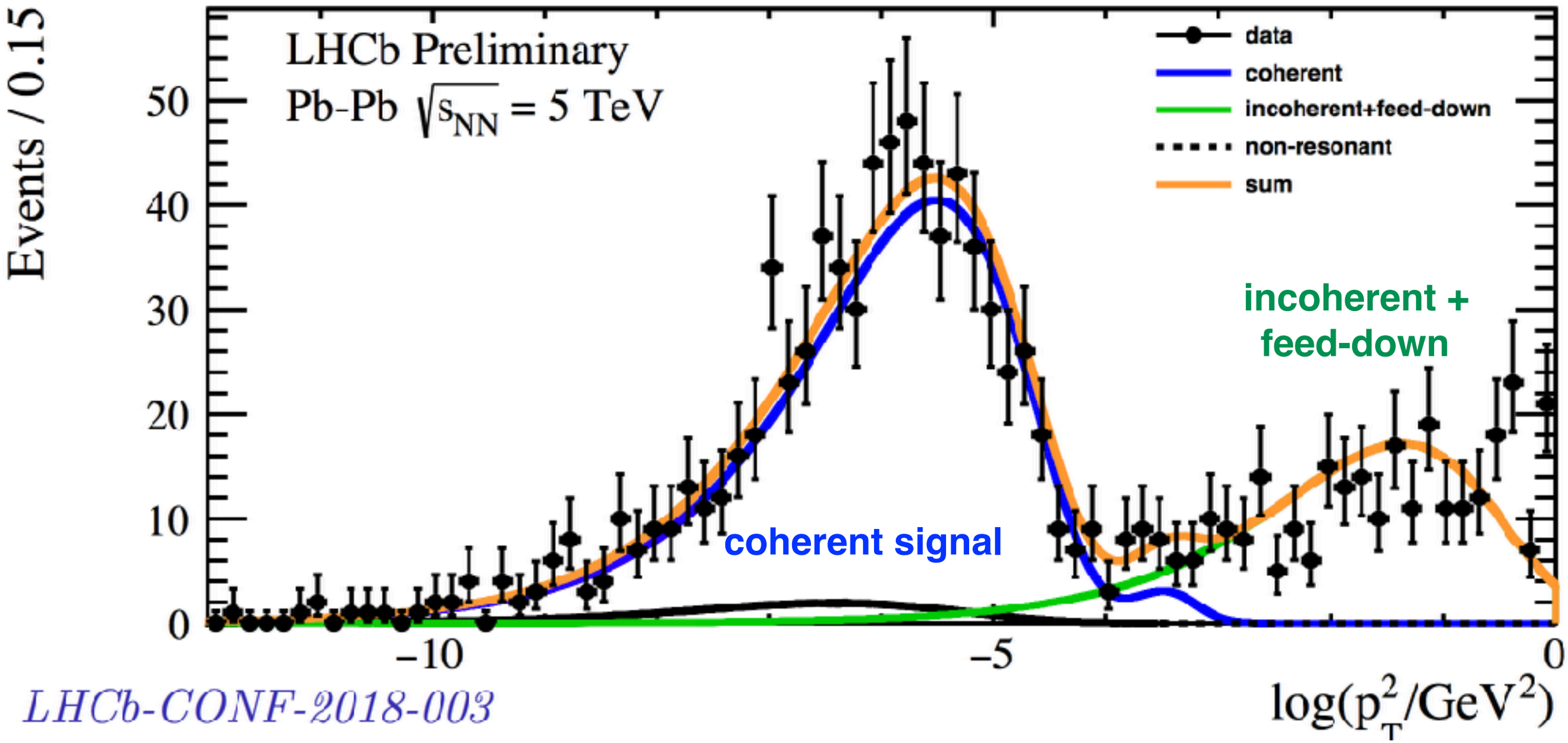

- Nonresonant: STARlight template normalisation fixed to the result of the mass fit
- Incoherent production: STARlight template also account for feed-down from $\psi(2S) \to J/\psi$
- Coherent production: STARlight template

STARlight: A monte carlo simulation program for ultra-peripheral collisions of relativistic ions: Computer Physics Communications **212** (2017) 258.

$\mathrm{PbPb} \to \mathrm{Pb} + J/\psi + \mathrm{Pb}$

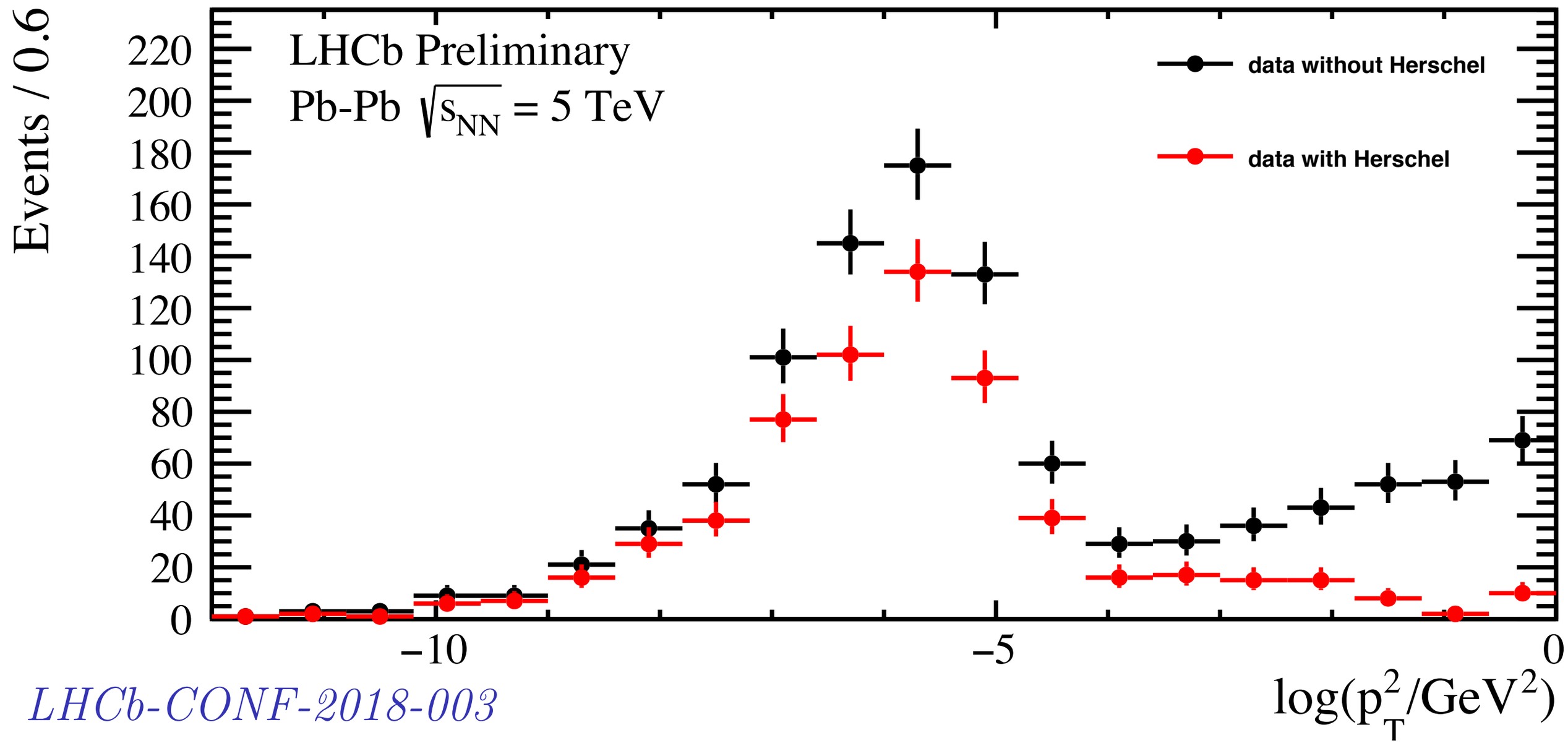

LHCb-CONF-2018-003

The use of HERSCHEL can help in reducing background and uncertainties

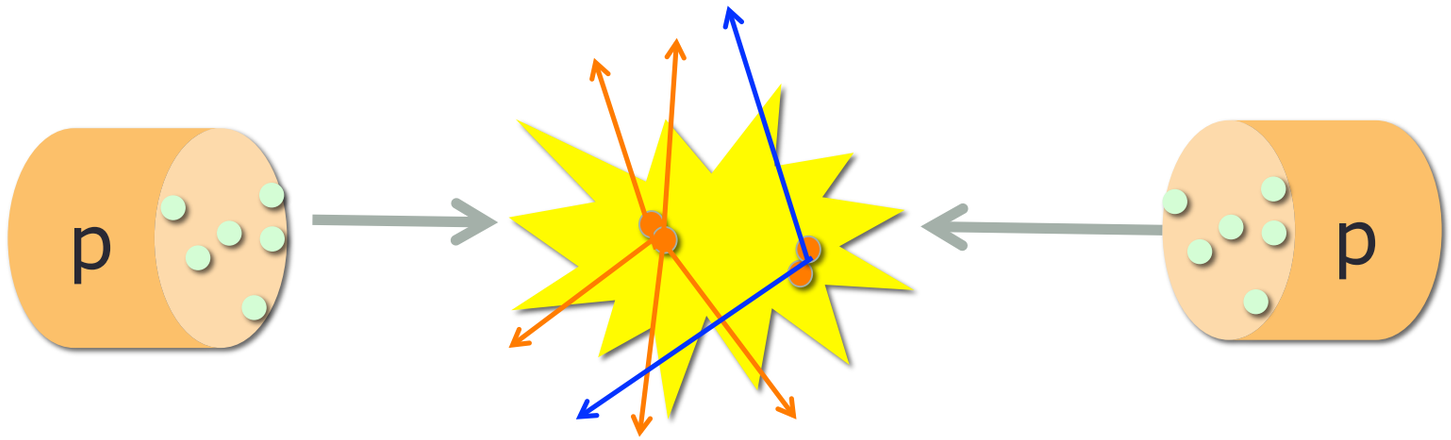

High luminosity requires multiple interactions per beam-crossings

Number of interactions n per beam crossings is distributed as:

$$P(n) = \frac{e^{-\mu}\mu^n}{n!}$$

average number of visible interactions in LHCb

additional interaction visible only in HERSCHEL is included in the veto efficiency of HERSCHEL

- For pp LHCb in 2015, $\mu = 1.08$ in average
- For PbPb LHCb in 2015, $\mu = 0.001$ in average

$$\frac{\mathrm{d}\sigma_{\psi\to\mu^+\mu^-}}{\mathrm{dy}}(2.0<\eta_\mu<4.5)=\frac{\mathcal{P}N}{\epsilon_{\mathrm{rec}}\epsilon_{\mathrm{sel}}\Delta y\epsilon_{\mathrm{single}}\mathcal{L}_{\mathrm{tot}}},$$

purity

number of selected events

integrated luminosity

reconstructed efficiency

selection efficiency

rapidity window

prob. to have one interaction i.e P(1)

The different numbers entering the calculation are given in the backup slide for J/ψ and ψ(2S)

Systematic uncertainties $pp \to p + J/\psi$ or $\psi(2S) + p$

preliminary

Source	J/ψ analysis (%) Update	J/ψ analysis (%) Previous	$\psi(2S)$ analysis (%) Update	$\psi(2S)$ analysis (%) Previous	
HERSCHEL veto	1.7	1.5	1.7	1.5	sel. eff. related
2 VELO track *new*	0.2		0.2		
0 photon veto *new*	0.2		0.2		
Mass window	0.6	0.4	0.6	0.4	
p_T^2 veto *new*	0.3		0.3		
Proton dissociation	0.7	4.0	0.7	4.0	purity related
Feed-down	0.7	0.1	-		
Nonresonant	0.1	0.6	1.5	1.4	
Tracking efficiency	0.7	4.0	0.7	4.0	reco. eff. related
Muon ID efficiency	0.4	0.4	0.4	0.4	
Trigger efficiency	0.2	0.2	0.2	0.2	
Total excluding luminosity	2.5	5.9	2.7	6.1	
Luminosity	3.9	3.9	3.9	3.9	

- Main uncertainties decreased with respect to previous analysis (LHCb-CONF-2016-007)
- Specially the proton dissociation background uncertainty thanks to the new method developed only possible with the new HERSCHEL detector!
- Better understanding of the tracking

Systematic uncertainties $\mathrm{PbPb} \to \mathrm{Pb} + J/\psi + \mathrm{Pb}$

Uncertainties relatively big: *work on-going*

PRELIMINARY

Source	Relative uncertainty (%)
Selection efficiency	3.2
Reconstruction efficiency	2.1 – 4.5
Hardware trigger efficiency	3.0
Software trigger efficiency	1.6 – 5.3
Momentum smearing model	3.3
Mass fit model	3.9
Feed-down background	5.8
Branching fraction	0.6
Luminosity	13.0

Different ways of calculating the luminosity give big differences: work is ongoing to understand it well

stat syst lumi

$$\sigma_{J/\psi\to\mu^+\mu^-}(2 < \eta_\mu < 4.5) = 399 \pm 16 \pm 10 \pm 16 \text{ pb},$$
$$\sigma_{\psi(2S)\to\mu^+\mu^-}(2 < \eta_\mu < 4.5) = 10.2 \pm 1.0 \pm 0.3 \pm 0.4 \text{ pb}.$$

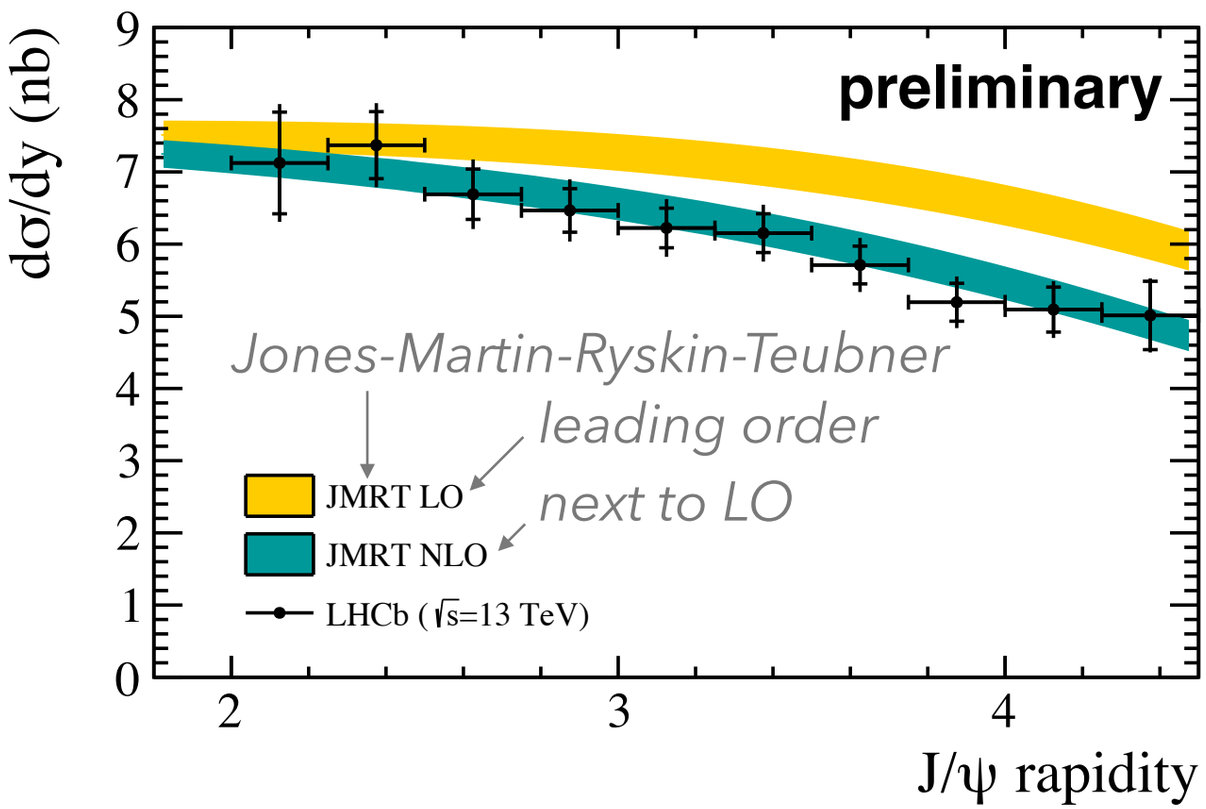

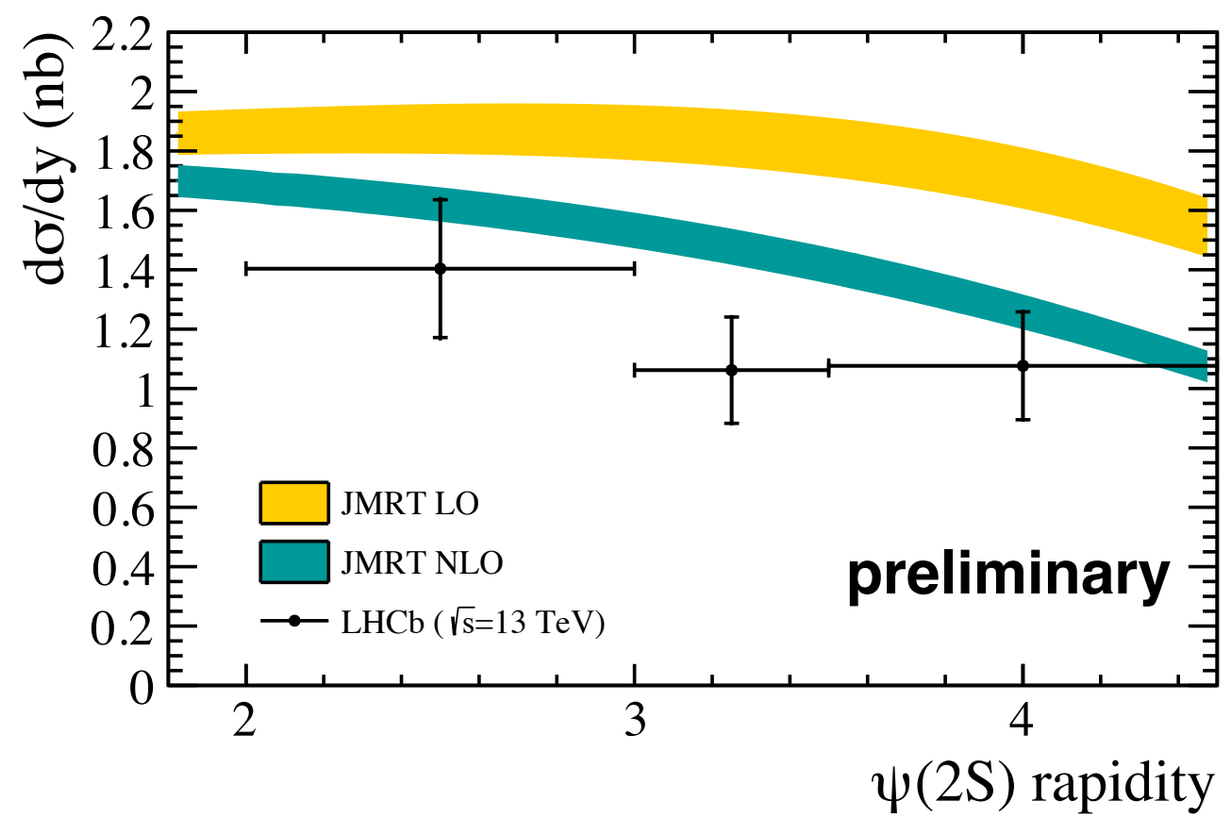

- Good agreement with JMRT NLO prediction J. Phys. **G41** (2014) 055009
  $\Rightarrow J/\psi$: $\chi^2/\text{ndf} = 8.5/10$ compared to $32.8/10$ for JMRT LO prediction
  $\Rightarrow \psi(2S)$: $\chi^2/\text{ndf} = 4.9/3$ compared to $15.4/3$ for JMRT LO prediction

Photo-production cross section $pp \to p + J/\psi$ or $\psi(2S) + p$

Photo-production to compare with fixed target experiments (HERA)

our data

$$\Rightarrow \sigma_{\gamma p \to \psi p}(W_+) = \frac{\sigma_{pp \to p\psi p} - r(W_-)k_- \frac{\mathrm{d}n}{\mathrm{d}k_-}\sigma_{\gamma p \to \psi p}(W_-)}{r(W_+)k_+ \frac{\mathrm{d}n}{\mathrm{d}k_+}}$$

absorptive corrections

photon energy

photon flux

$k_\pm \equiv M_\psi / 2e^{\pm y}$

2-fold ambiguity contributing to one LHCb rapidity bin: $W_\pm^2 = 2k_\pm\sqrt{s}$

assume photon-production cross section for W- as the one from HERA

as it contributes about 1/3 and already measured by HERA

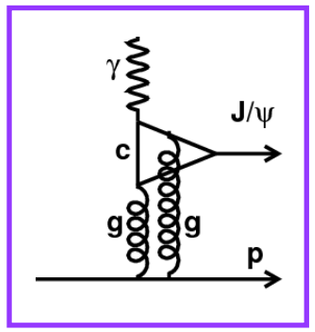

J/ψ

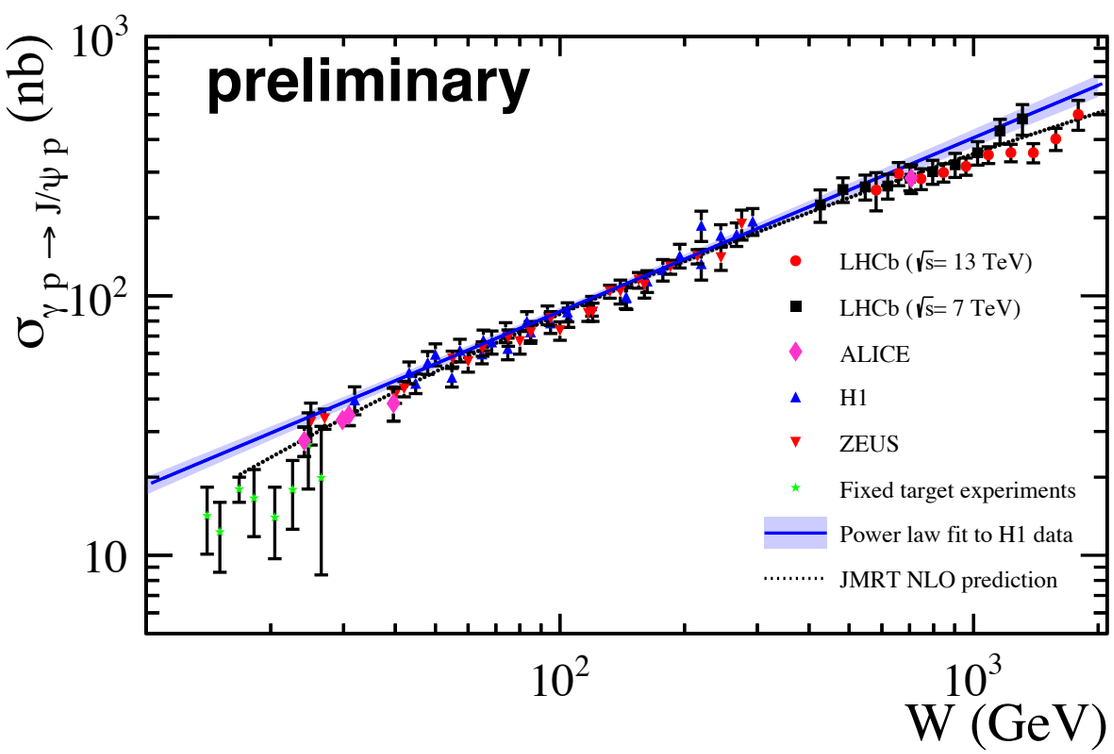

ψ (2S)

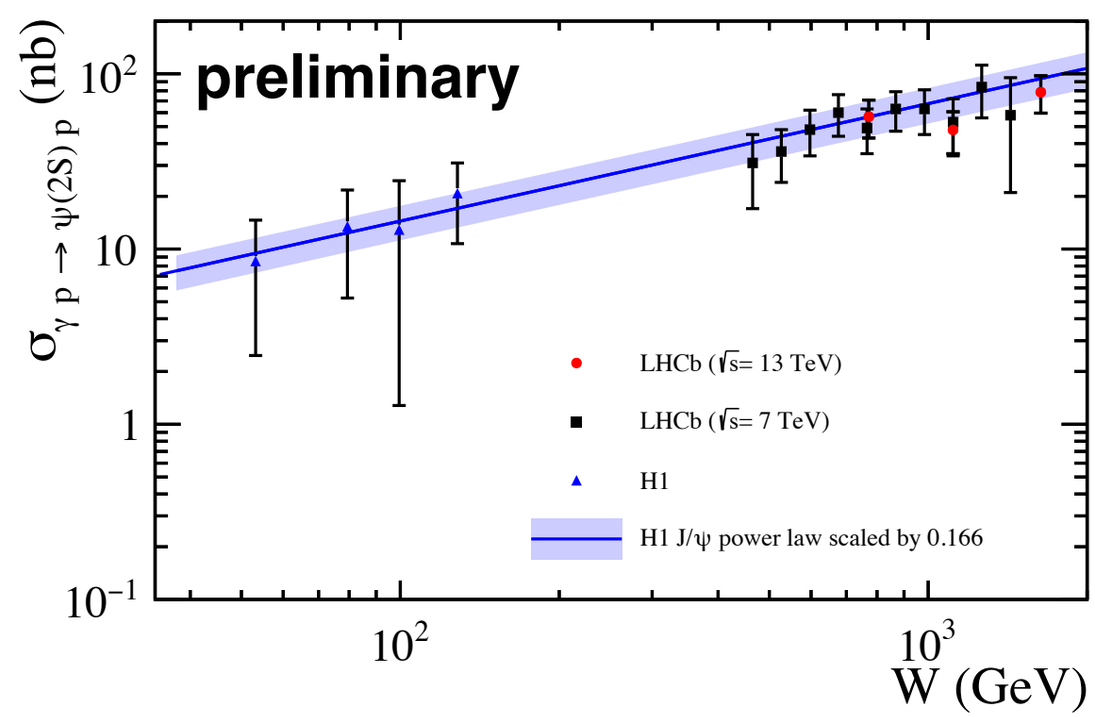

=centre-of-mass energy of the photon-proton system

Cross-section result: $\mathrm{PbPb} \to \mathrm{Pb} + J/\psi + \mathrm{Pb}$

$$\sigma(2 < y_{J/\psi} < 4.5) = 5.31 \pm \underset{\text{stat}}{0.24} \pm \underset{\text{syst}}{0.45} \pm \underset{\text{lumi}}{0.69}\ \mathrm{mb}$$

- Best description: Guzey et al.:
  ➡ uses perturbative QCD with 3 different nuclear gluon distribution function
- Goncalves and Cepila use colour dipoles in the calculation.
  - For Goncalves the plots shows the 2 extreme scenario over 6 different models
  - Cepila applies different parametrisation of the dipole-proton cross-section
    - 2 different prescriptions to propagate it to the dipole-nucleus scattering which improved the description but breaks down at high rapidity
      ➡ Glauber Gribov methodology (GG)
      ➡ Geometrical Scaling (GS)

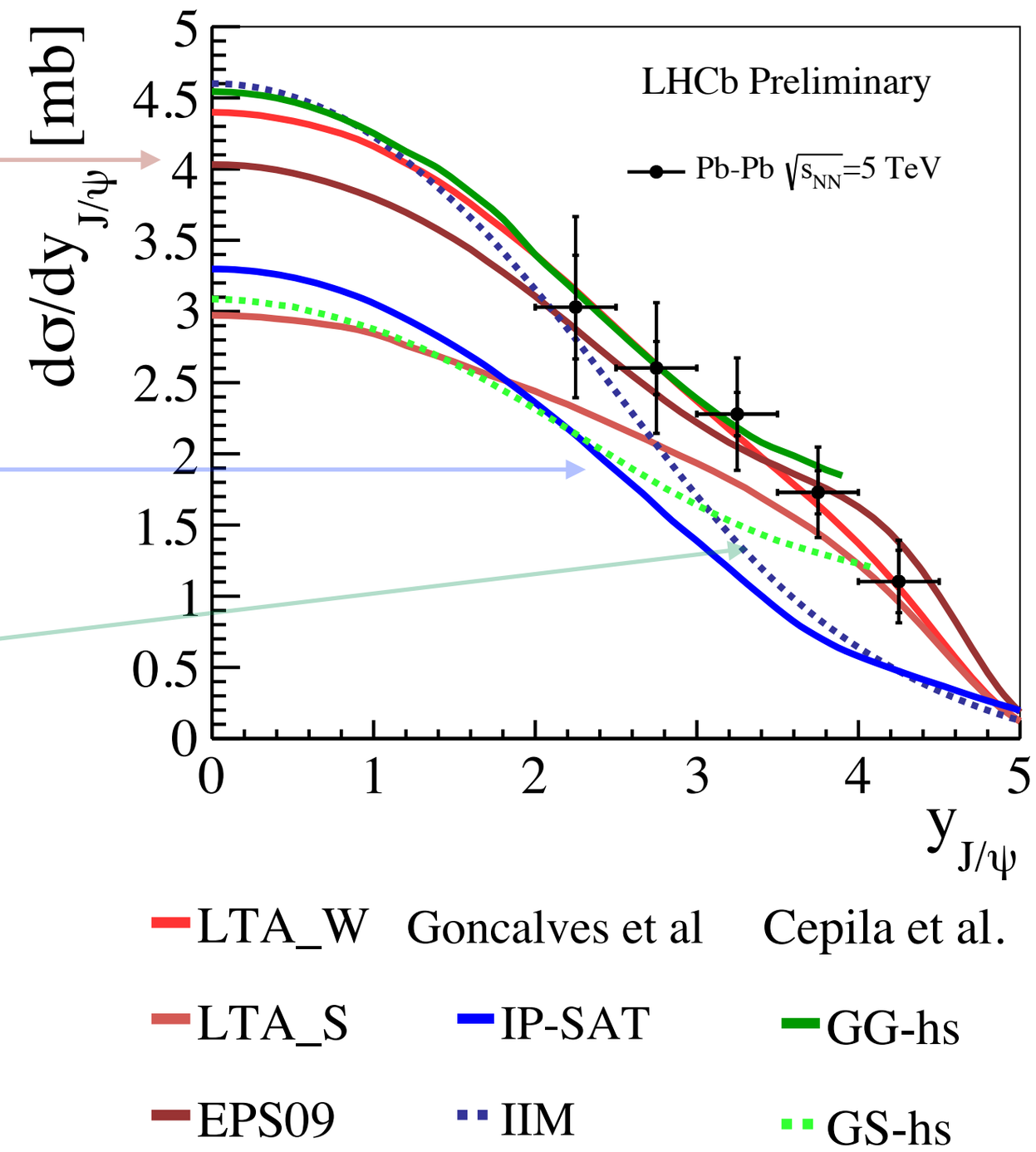

Conclusion and prospects

- J/ψ and $\psi(2S)$ production cross-sections with 2015 dataset have been calculated in pp data with $\sqrt{s} = 13$ TeV
  $\Rightarrow$ *better understanding of the backgrounds with respect to LHCb-CONF-2016-017 thanks to* HeRSCheL
- Preliminary J/ψ production cross-section with 2015 dataset has been calculated in PbPb data with $\sqrt{s} = 5$ TeV
  $\Rightarrow$ *more improvements to be seen in this analysis using* HeRSCheL
  $\Rightarrow$ *looking forward to the larger dataset in fall 2018*
- Other work ongoing in pA data with 2016 dataset
  $\Rightarrow$ *more results to come in the near future*

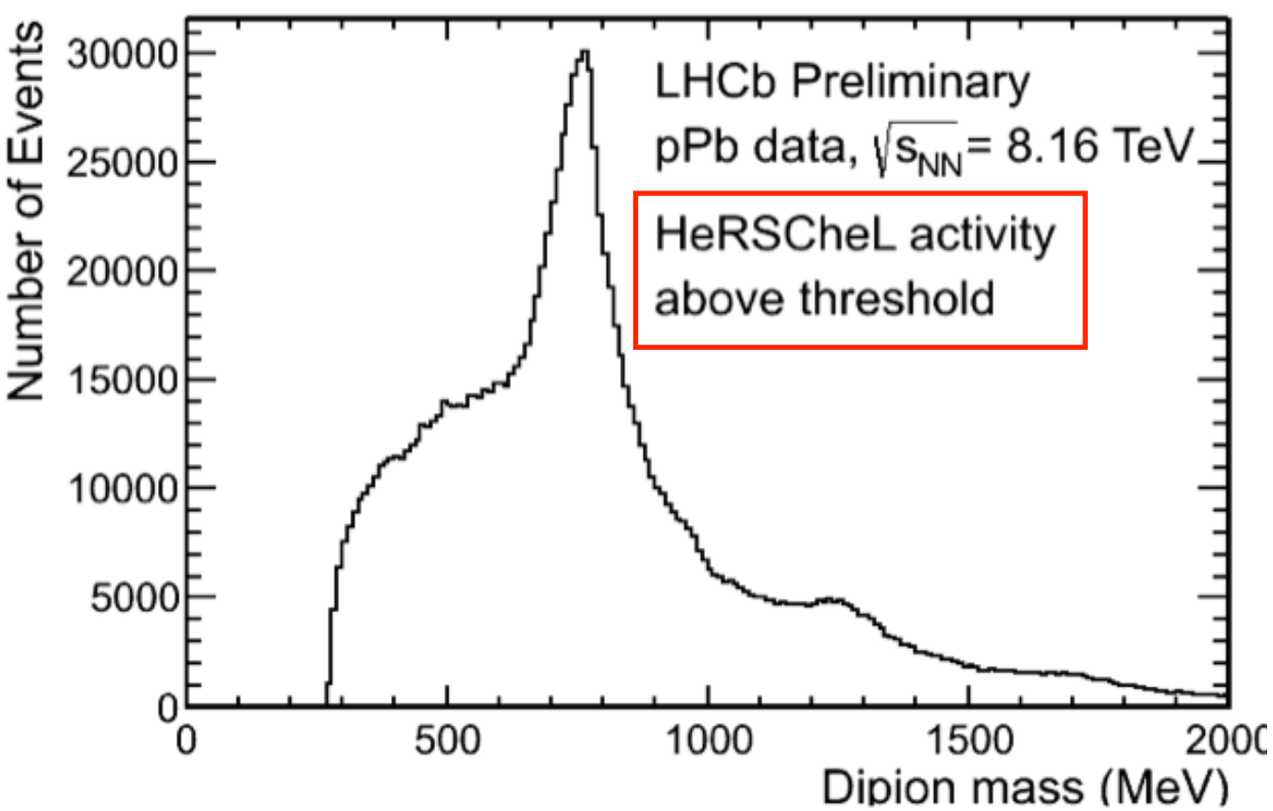

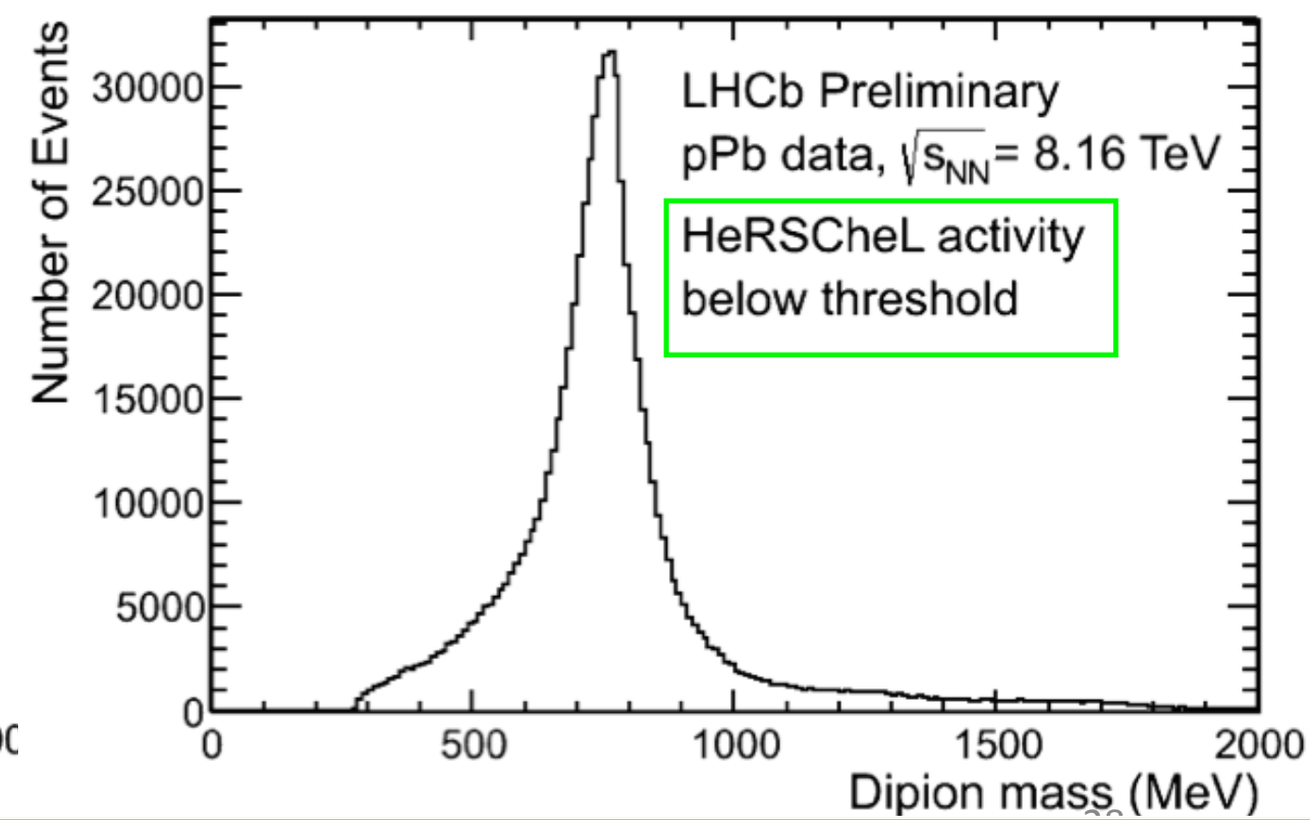

- THANK YOU

- BACK-UP

Angular coverage and pseudo-rapidity

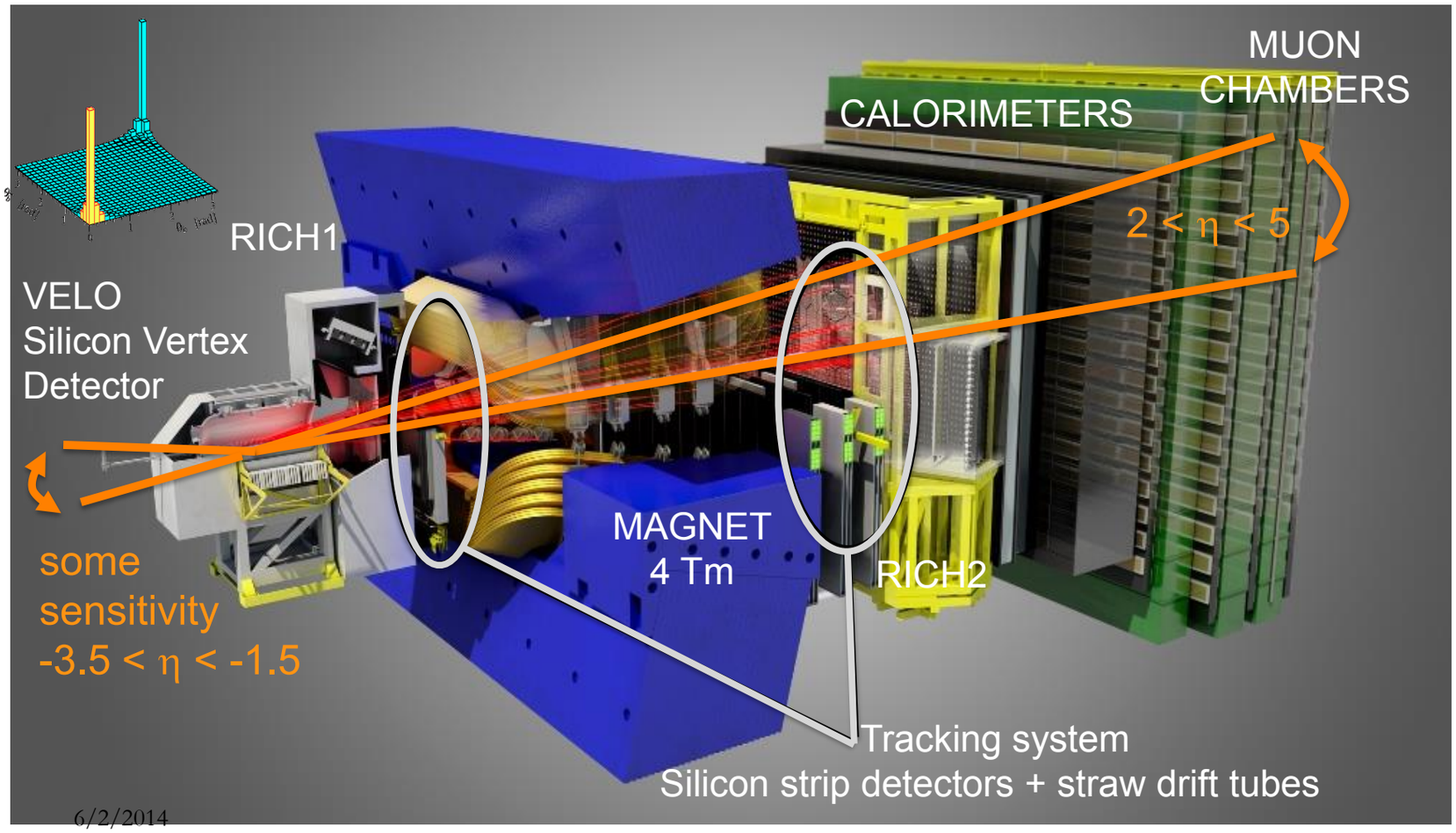

pseudo-rapidity:

$$\eta \equiv -\ln\left[\tan\left(\frac{\theta}{2}\right)\right]$$

where θ is the angle between the particle momentum $\vec{p}$ and the beam axis

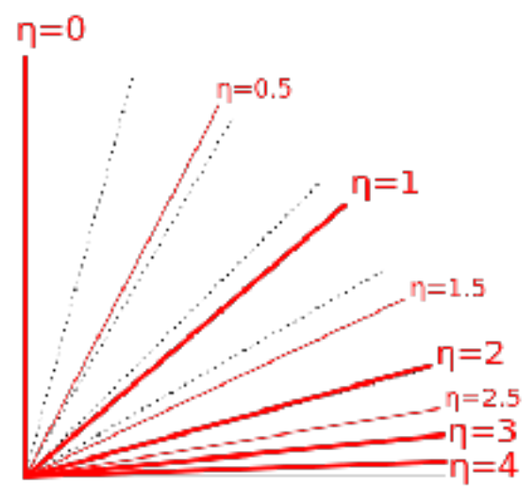

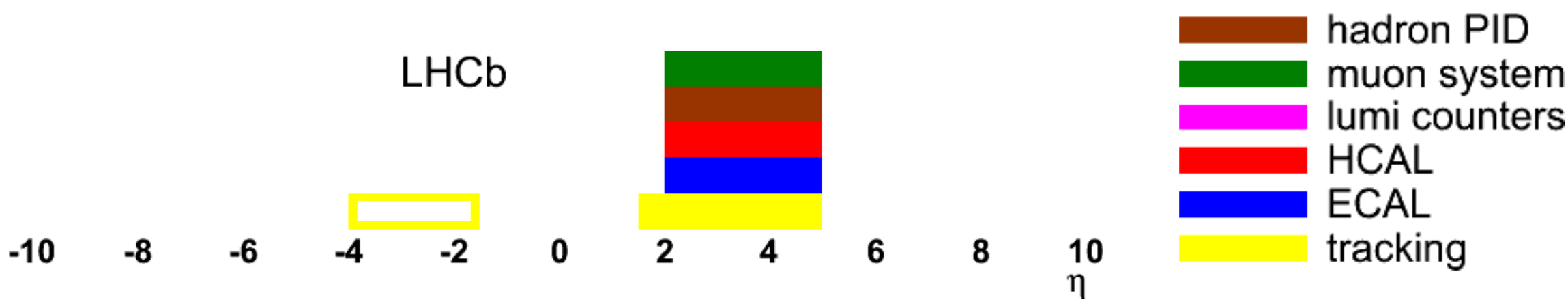

New method to get the dissociation background

S_H if $\log(\chi^2_{\mathrm{HRC}}) < 3.5$

$S_{\bar{H}}$ if $\log(\chi^2_{\mathrm{HRC}}) > 3.5$

$\beta = S_{\bar{H}} - ((1-\epsilon_{\mathrm{H}})/\epsilon_{\mathrm{H}})S_H$ contains only background

efficiency for $\log(\chi^2_{\mathrm{HRC}}) < 3.5$

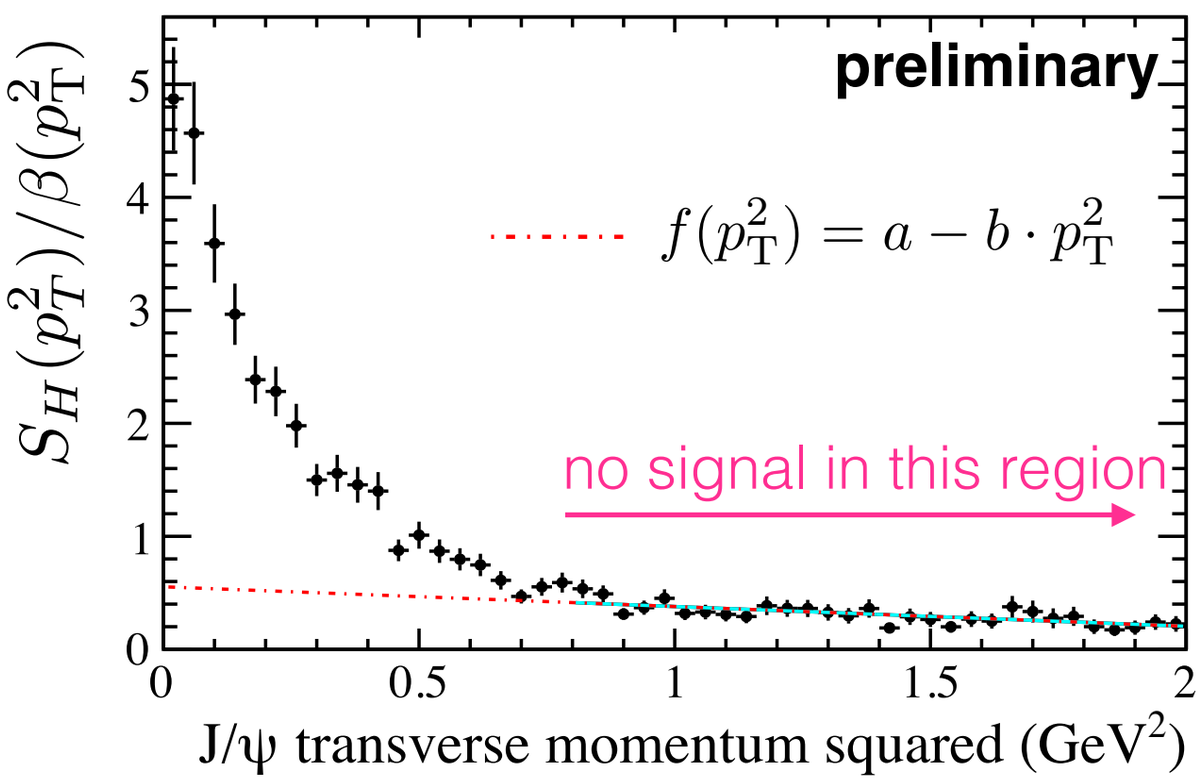

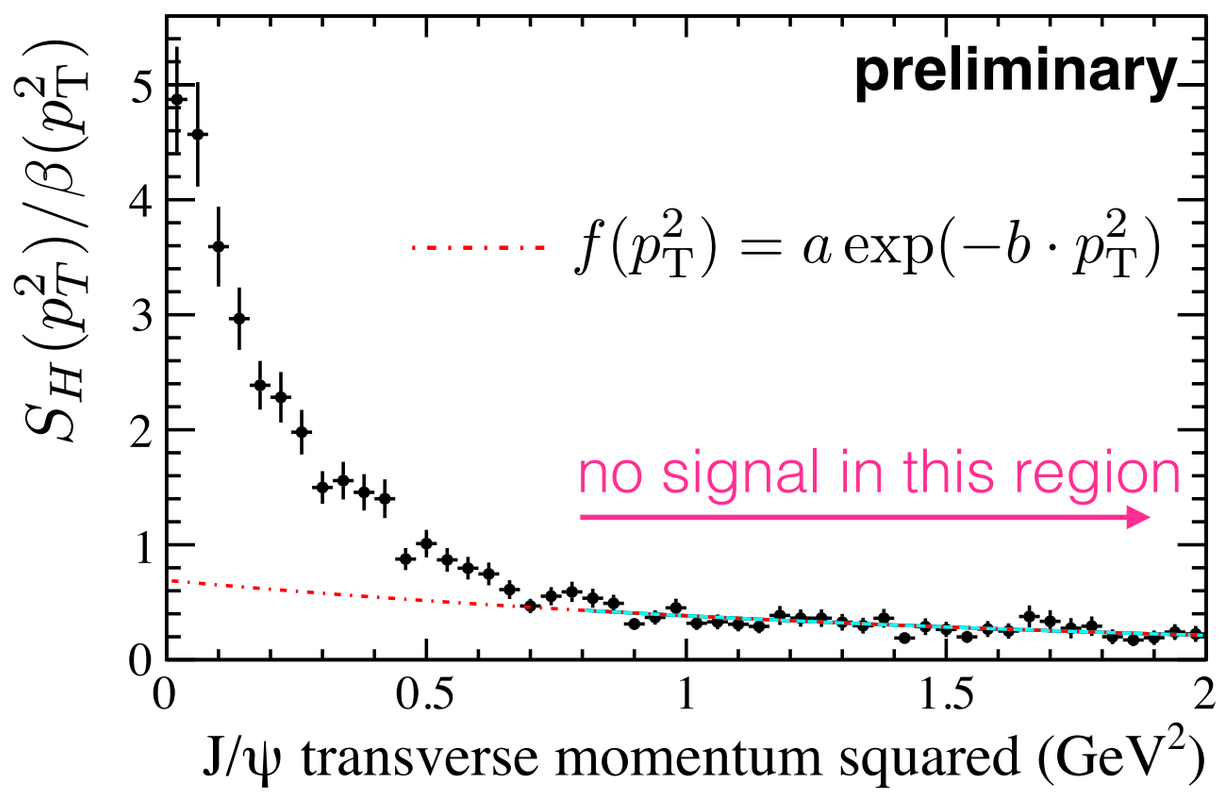

$\Rightarrow$ proton dissociation background $= \beta(p_{\mathrm{T}}^2) \cdot f(p_{\mathrm{T}}^2)$

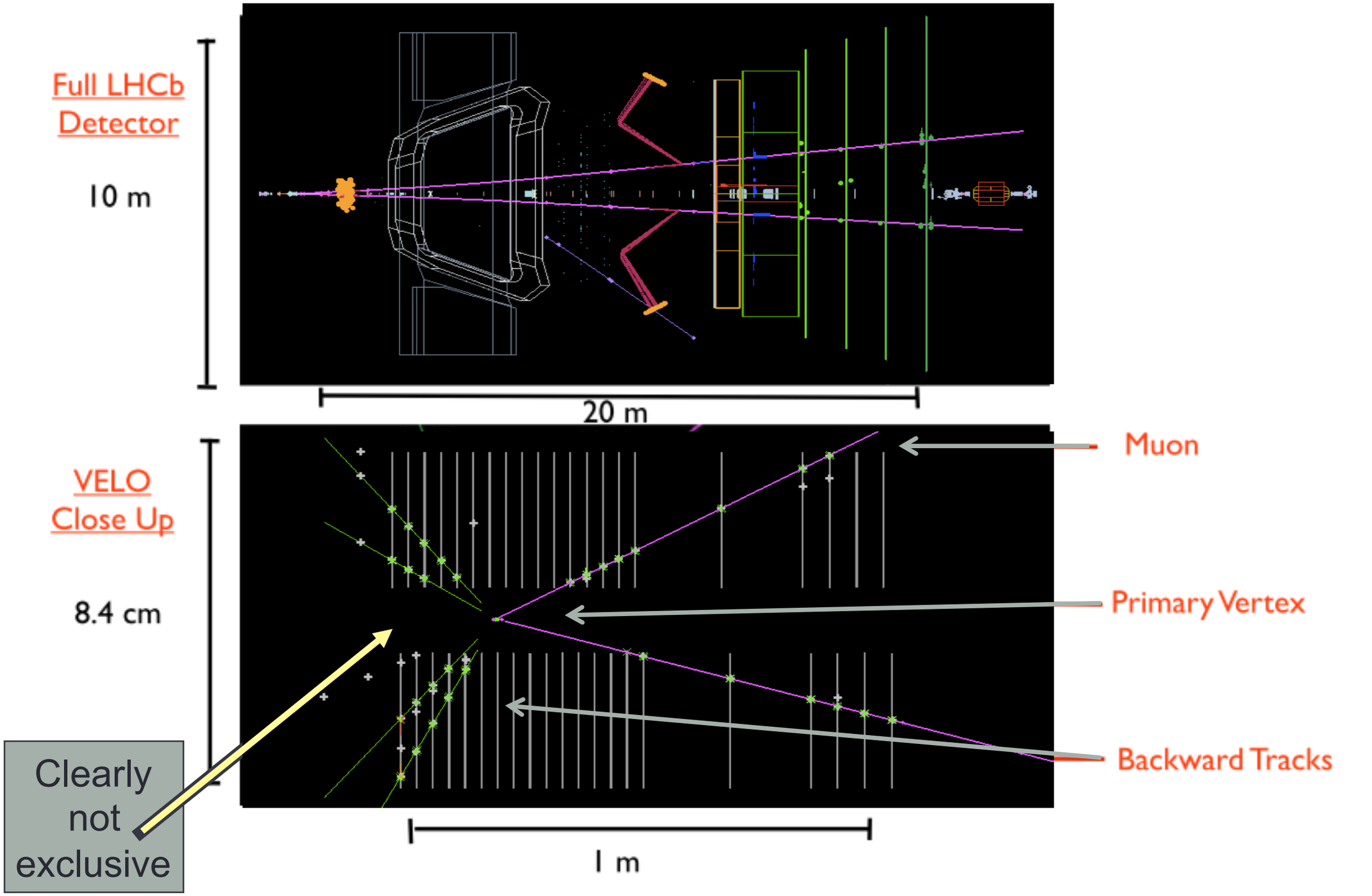
Full LHCb Detector
10 m
20 m
VELO Close Up
8.4 cm
1 m
Muon
Primary Vertex
Backward Tracks
Clearly not exclusive

Values entering the cross-section calculation

Table 2: Tabulation of numbers entering the cross-section calculation for the J/ψ analysis with statistical and systematic uncertainties.

y bin	**2.0−2.25**	**2.25−2.5**	**2.5−2.75**	**2.75−3.0**	**3.0−3.25**
N	259	1022	1644	2204	2482
Stat. unc. (%)	6.2	3.1	2.5	2.1	2.0
ϵ_{rec}	0.410	0.525	0.555	0.565	0.563
Stat. unc. (%)	5.9	4.2	3.3	2.8	2.6
Syst. unc. (%)	3.1	0.8	1.7	1.0	0.5
ϵ_{sel}	0.636	0.643	0.650	0.655	0.663
Stat. unc. (%)	1.2	1.2	1.2	1.2	1.2
Syst. unc. (%)	2.5	2.0	2.0	1.9	1.9
Purity	0.760	0.759	0.751	0.758	0.764
Stat. unc. (%)	2.7	2.2	2.2	2.1	2.1
Syst. unc. (%)	1.0	1.0	1.0	1.0	1.0
$\mathcal{L}_{\text{tot}}$			204 pb^{-1}		
ϵ_{single}			0.3662		
$\mathrm{d}\sigma/\mathrm{d}y$(pb)	40	123	183	242	272
Stat. unc. (%)	9.2	6.0	5.0	4.5	4.3
Syst. unc. (%)	4.3	2.7	3.1	2.7	2.6
Lumi. unc. (%)	3.9	3.9	3.9	3.9	3.9

preliminary

Values entering the cross-section calculation

y bin	**3.25−3.50**	**3.50−3.75**	**3.75−4.0**	**4.0−4.25**	**4.25−4.5**
N	2522	2112	1433	829	246
Stat. unc. (%)	2.0	2.2	2.6	3.5	6.4
ϵ_{rec}	0.587	0.599	0.588	0.551	0.518
Stat. unc. (%)	2.5	2.6	2.8	3.3	4.1
Syst. unc. (%)	0.6	0.6	0.5	0.8	0.9
ϵ_{sel}	0.665	0.670	0.670	0.676	0.667
Stat. unc. (%)	1.2	1.2	1.2	1.2	1.2
Syst. unc. (%)	1.9	1.9	1.9	1.9	2.0
Purity	0.763	0.749	0.748	0.732	0.738
Stat. unc. (%)	2.1	2.1	2.2	2.4	3.1
Syst. unc. (%)	1.0	1.0	1.0	1.0	1.0
$\mathcal{L}_{\text{tot}}$			204 pb^{-1}		
ϵ_{single}			0.3662		
$\text{d}\sigma/\text{d}y(\text{pb})$	264	211	146	87	28
Stat. unc. (%)	4.3	4.4	4.8	5.7	8.5
Syst. unc. (%)	2.6	2.6	2.6	2.7	2.8
Lumi. unc. (%)	3.9	3.9	3.9	3.9	3.9

preliminary

Values entering the cross-section calculation

$\psi(2S)$ analysis

y bin	**2.0−3.0**	**3.0−3.5**	**3.5−4.5**
N	170	134	136
Stat. unc. (%)	7.7	8.6	8.6
ϵ_{rec}	0.633	0.644	0.622
Stat. unc. (%)	3.4	2.6	2.9
Syst. unc. (%)	1.3	0.6	0.6
ϵ_{sel}	0.650	0.664	0.671
Stat. unc. (%)	1.2	1.2	1.2
Syst. unc. (%)	1.9	1.9	1.9
Purity		0.726	
Stat. unc. (%)		8.4	
Syst. unc. (%)		1.7	
$\mathcal{L}_{\text{tot}}$		204 pb^{-1}	
ϵ_{single}		0.3662	
$\text{d}\sigma/\text{d}y(\text{pb})$	4.0	6.1	3.2
Stat. unc. (%)	12.0	12.4	12.4
Syst. unc. (%)	2.9	2.7	2.7
Lumi. unc. (%)	3.9	3.9	3.9

preliminary