Beam Dump Facility Target: Material R&D and Beam Tests

A. Perillo-Marcone, **E. Lopez Sola**, M. Calviani, **J. Busom**, P. Avigni, L. Bianchi, M. Guinchard, M. Casolino, O. Aberle, D. Grenier, A. Ortega, S. Sgobba

CERN | EN ENGINEERING DEPARTMENT

RaDIATE 2018
Collaboration Meeting

Beam Dump Facility target

- Main functions:
  - **Full SPS 400 GeV/c beam absorption**
    → **Target/dump**
  - Maximize the production of **charmed mesons** → physics performance

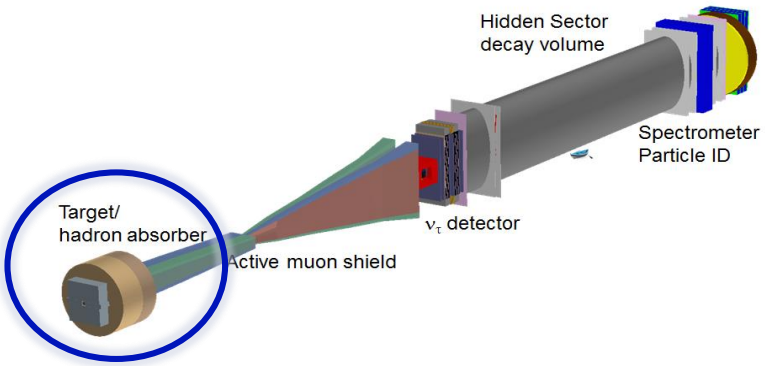

- Material requirements: **High-Z materials + short interaction length**

1st part: **TZM core**
Molybdenum alloy, higher strength and recrystallization temperature than pure Mo

Ta/Ta2.5W cladding
To avoid **corrosion/erosion effects** (forced water cooling between blocks)
Achieved via **Hot Isostatic Pressing**

2nd part: **Tungsten core**
High-Z and good performance under irradiation

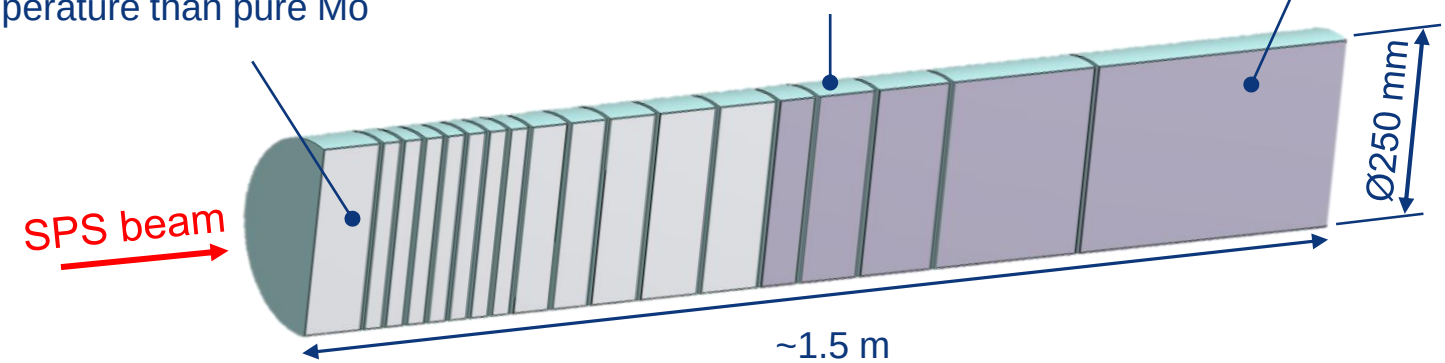

Operational conditions

Baseline characteristics	
Proton momentum	**400 GeV/c**
Beam intensity	$4.0 \cdot 10^{13}$ p+/cycle
Cycle length	7.2 s
Spill duration **(slow extraction)**	1.0 s
Average beam power deposited on target	**320 kW**
Beam energy on target during spill	2.3 MJ

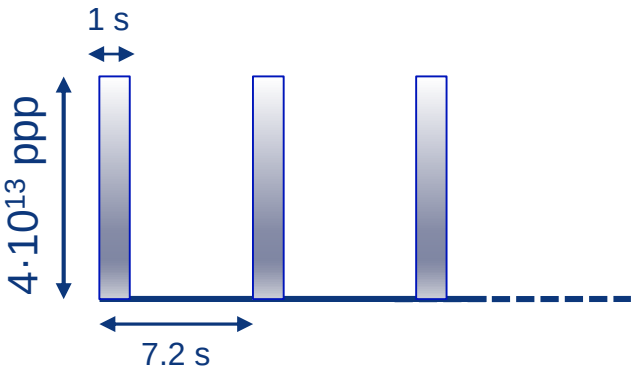

⇨ Challenging target design

- **Circular dilution of the beam** by the upstream magnets
- 50 mm radius, 4 turns in 1 second
- **Large beam spot:** 8 mm 1σ

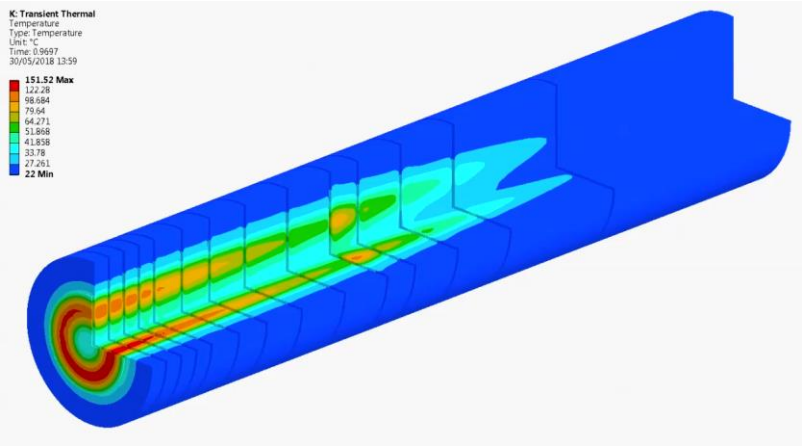

Material selection - Cladding

- Bonding compatibility to target materials
- Extensive operational experience
- Similar thermal expansions than target materials
- High solubility with target materials

Tantalum

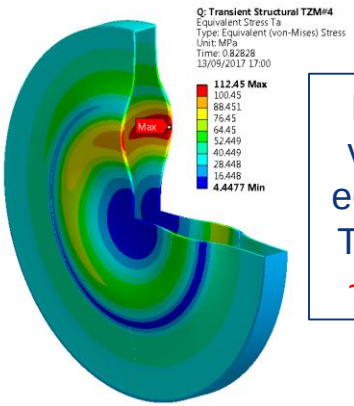

Maximum von Mises eq. stress in Ta cladding ~110 MPa

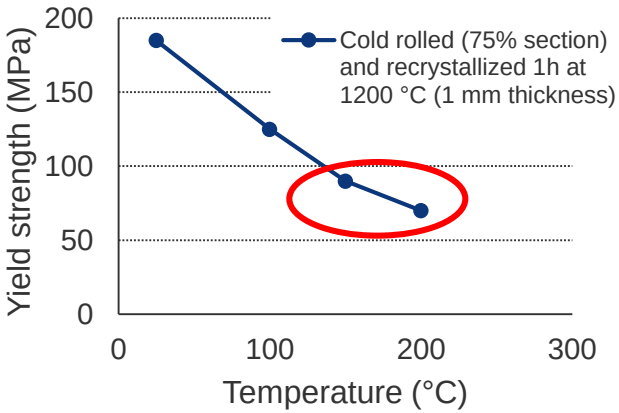

- Ta plastic regime during operation → Premature cladding failure → Alternative cladding material

Tantalum alloy with 2.5% tungsten (Ta2.5W)

- Yield strength > 200 MPa over the T operational range
- HIP compatible with Mo / W (mutual perfect solubility)
- Improved corrosion resistance and hydrogen embrittlement [1]
- Improved proton irradiation resistance [2]

1. L. Gypen et al., 1984
2. I. Ipatova et al., 2017

Material selection - Target

- BDF target blocks reference grade → Double-forged material
- W blocks biggest dimensions: 250 mm diameter – 350 mm length → Upset forging not possible
  - Two alternative routes:
    - Sintered + HIPed quality
      - Detrimental in mechanical properties
      - Reliable and developed solution
    - Stacking blocks by diffusion bonding
      - Double-forged grade
      - Development required

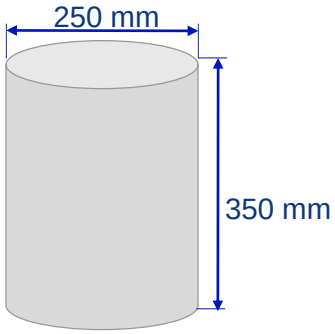

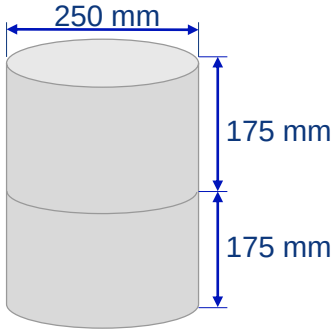

- Challenging bonding between W-W and TZM - TZM

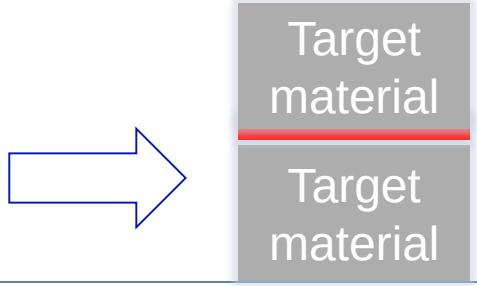

Current objectives

- Validate diffusion bonding via **HIP** for all **target and cladding** materials (especially Ta2.5W)
- Study potential bonding between **target** - **target** materials
- Study potential benefits of **interfacial aids** (Ta interfoils)
- Explore different **HIP cycle parameters** to optimize bonding properties
- Determine **effect of HIP** cycle on **target materials**
- Anticipate any potential issue in the manufacture of the final BDF target

Prototypes

- Bonding tested in downscaled prototypes
- Two types of prototypes prepared:

Target-cladding materials bonding

Target-target materials bonding

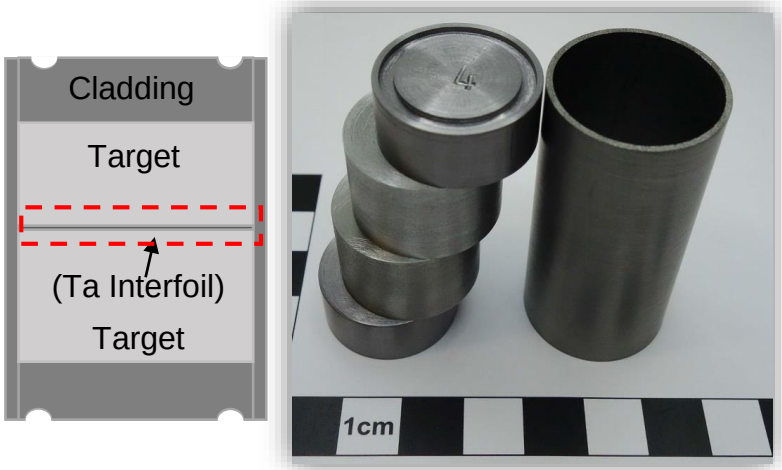

Interfoil: 50 µm Ta foil

- Cladding thickness increased in lids (10 mm instead of 1.5 mm) to extract machined specimens
- Lids and internal cylinder machined to -0.1 mm tolerance

Prototype manufacture and testing

- Machined lip for better welding
- Electron beam welding (EBW) employed
- L
- C

Several prototype sets

HIP cycle

- HIP cycle carried out at HIP PM Volker (Dorfen, Germany)
- Furnace with Mo heater
- Atmosphere: Ar 5.0 grade
- Heating rate: 10 °C / min
- Dwell time: 3 h

- Two different cycles
  - Cycle "**L**": Temperature (**1200 °C**) and pressure (**1500 bar**) – below W and TZM recrystallization temperatures to maintain W and TZM mechanical properties
  - Cycle "**H**": Temperature (**1400 °C**) and pressure (**2000 bar**) – above recrystallization temperature to improve bonding

Cycle "**L**"

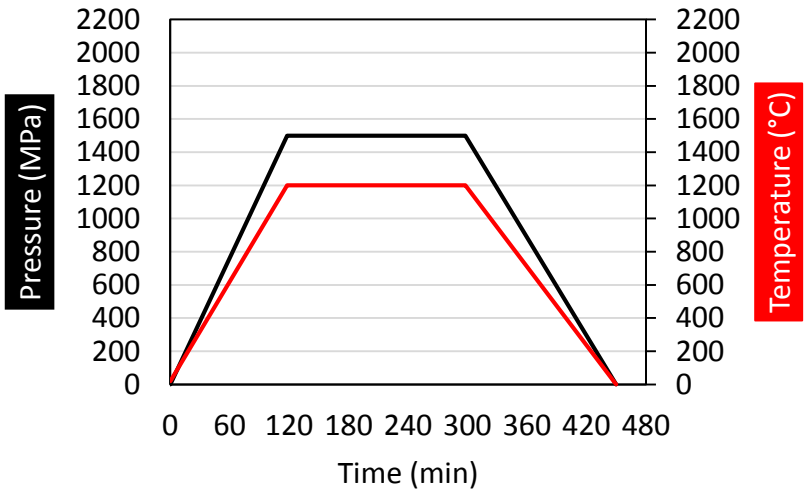

Cycle "**H**"

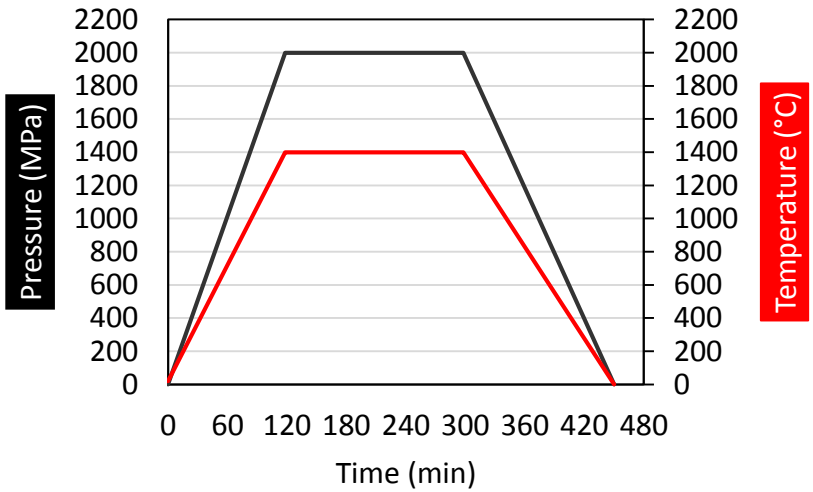

Testing matrix

Bonding specimen type	Target to cladding			
	Target material	Cladding material	Ta interfoil	HIP parameters
1	TZM	Ta2.5W	Yes	L: 1200 °C / 150 MPa
2			-	
3		Ta	-	
4	W	Ta2.5W	Yes	
5			-	
6		Ta	-	
7	TZM	Ta2.5W	Yes	H: 1400 °C / 200 MPa
8			-	
9		Ta	-	
10	W	Ta2.5W	Yes	
11			-	
12		Ta	-	
	Target to target			
	Target material	Target material	Ta interfoil	HIP parameters
13	TZM	TZM	Yes	L: 1200 °C / 150 MPa
14			-	
15	W	W	Yes	
16			-	
17	TZM	TZM	Yes	H: 1400 °C / 200 MPa
18	W	W	Yes	

Microscopy results

- **Target – cladding**
  - Diffusion layer difficult to observe
  - Potential diffusion bonding in all the combinations but Ta2.5W-W cycle L
  - No inter-metallics, pores, voids, or segregations were observed

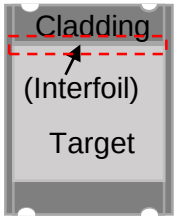

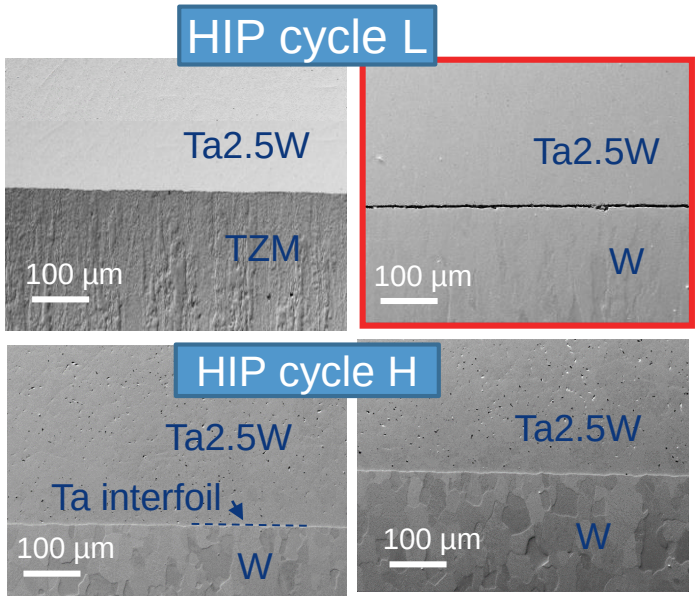

- **Target – target**
  - Diffusion layer difficult to observe
  - TZM-TZM showed recurrent gaps and heterogeneities
  - W-W showed no bonding
  - Potential diffusion bonding in all the combinations with Ta foil

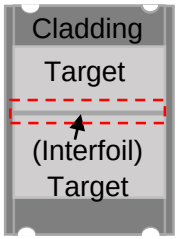

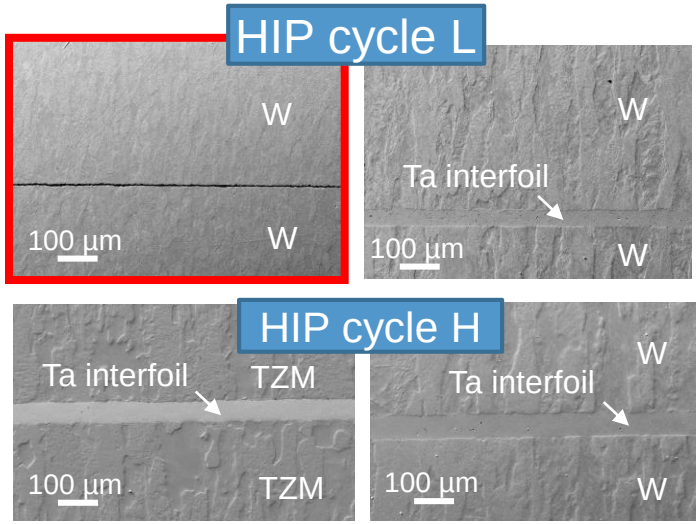

Results target - cladding

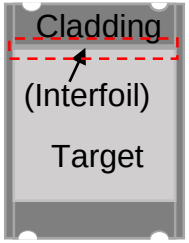

- **Tensile testing**
  - Most of specimens failed at interface
  - Strong bonding for TZM-Ta, TZM-Ta2.5W and W-Ta, **close to cladding material strength**
  - W-Ta2.5W required interfoil for cycle L
  - Stronger bondings for Ta2.5W

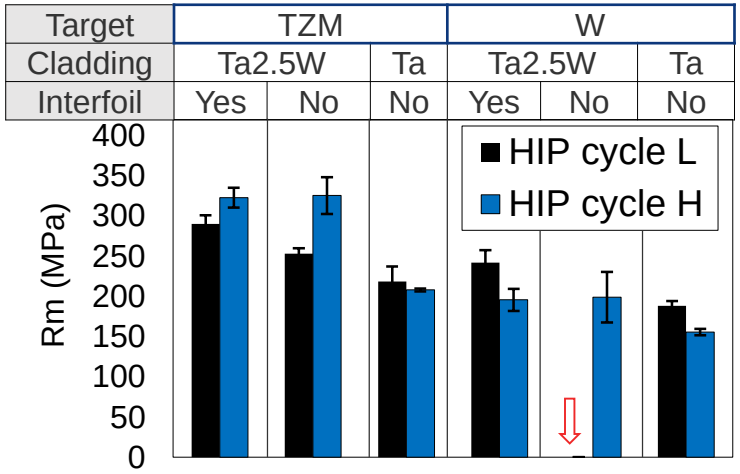

- **Thermal conductivity**
  - Measured values compared to perfect interfaces (with no interface resistance)
  - **No significant reductions in thermal conductivity** were observed
  - Values independent on the bonding conditions

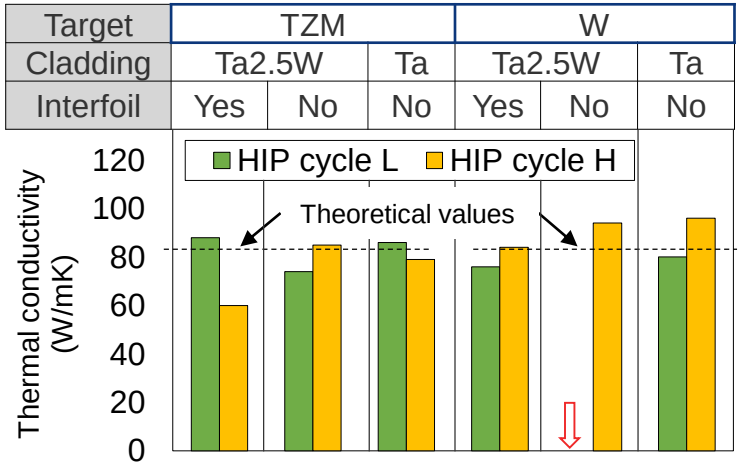

Results target - target

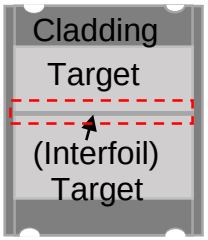

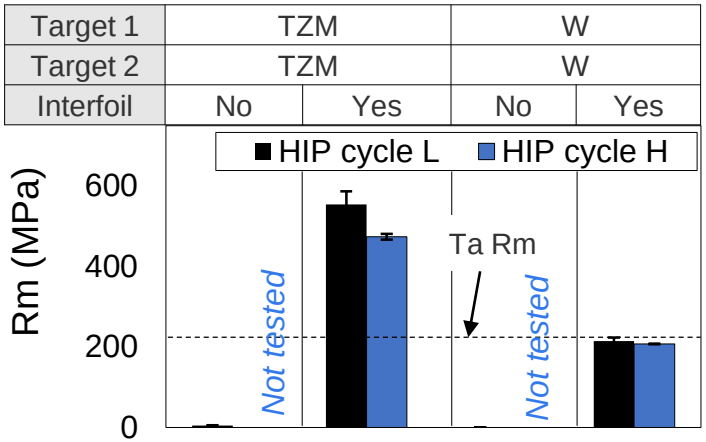

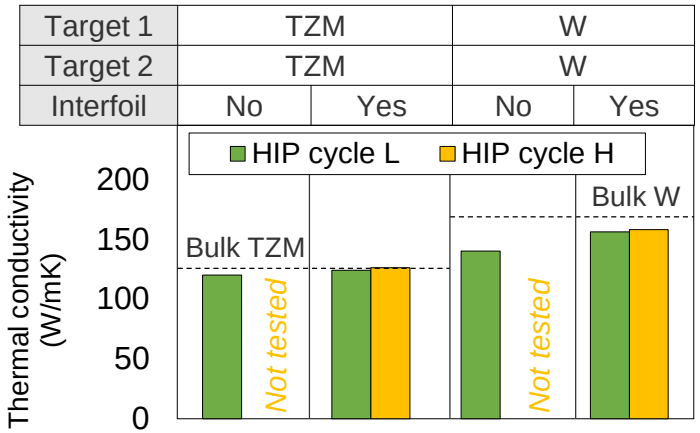

- **Tensile testing**
  - Low (5 MPa for TZM-TZM) or **nil bonding strength was obtained for the bondings without interfoil**
  - With interfoil, bonding strength of Ta Rm for W-W and surprisingly 2x - 3x Ta Rm for TZM-TZM
- **Thermal conductivity**
  - Less influenced by the bonding parameters.
  - Higher values observed with interlayer

Further work – BDF target prototype

HIP clad for real scale geometries

- Technique validated up to Ø80 mm and 350 mm length
- Full characterization on-going

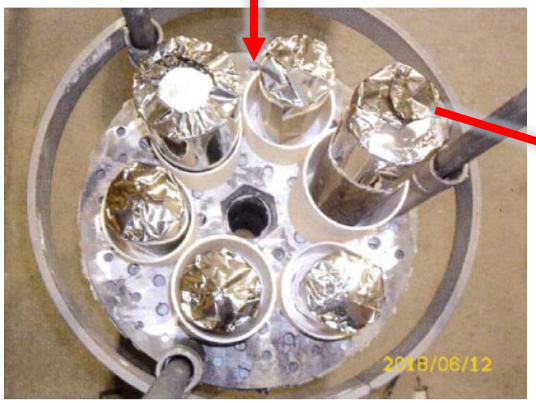

BDF target prototype

- Reliability of the target is a critical aspect for the design of BDF facility (materials, availability, RP aspects, physics, etc.)
  - **Representative beam test suggested before LS2**
- HiRadMat cannot be used (SX)
- **The only area adapted for such a test has been identified in TCC2, directly upstream T6 Be primary target**

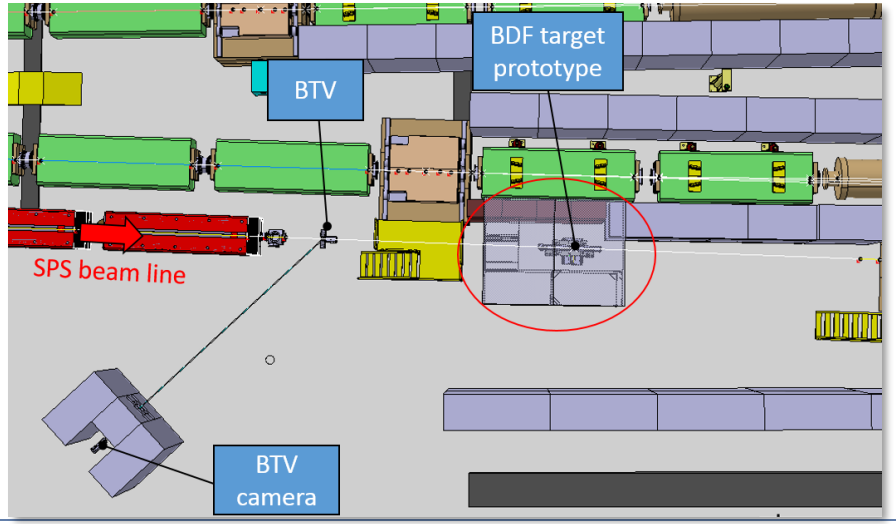

Objectives of the target prototype test

1. **Reproduce the level of temperatures and stresses of the final target**
   - High intensity beam (up to **$4 \cdot 10^{12}$ protons**) from SPS
   - **Slow extraction**: 1s pulse, 7.2 period
   - Validate cooling performance
   - Evaluate “thermal shock” in refractory metals
2. **Crosscheck the FEM calculations performed**
   - Several **instrumented blocks** → instrumentation survival in challenging environments
3. **Post Irradiation Examination (PIE) after irradiation**
   - Several irradiated target blocks sent for PIE

Target prototype design

- **Reduced scale prototype**
  - Same total length (~1.5 m)
  - Reduced diameter **(80 mm)**
  - Same block length distribution
  - TZM/W core, Ta/TaW cladding

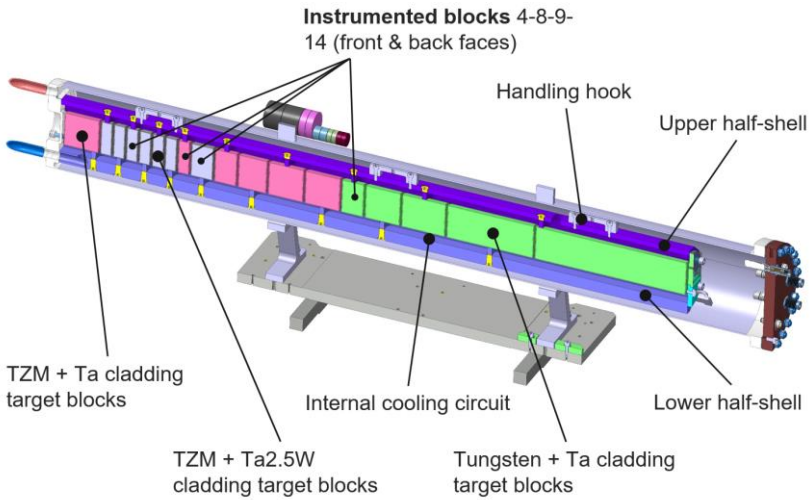

- **Two concentric tanks**

  (~ final target)
  - Outer tank:
    - Leak tightness
    - Connections interface
  - Inner tank: two half shells
    - Target core blocks holder
    - Enclosing cooling circuit

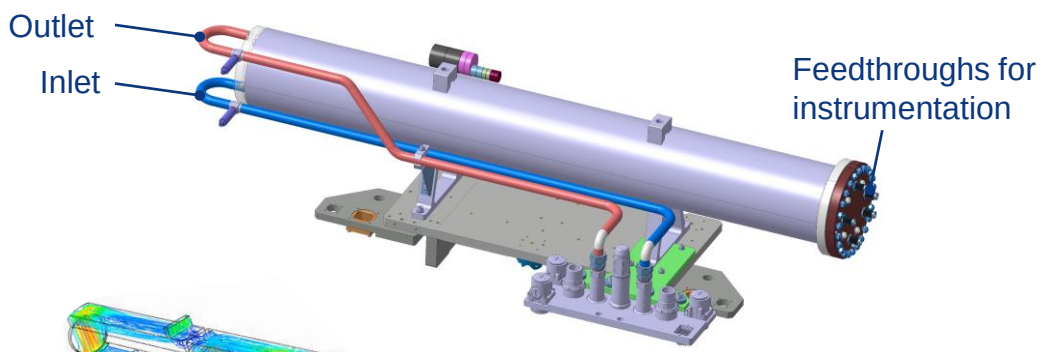

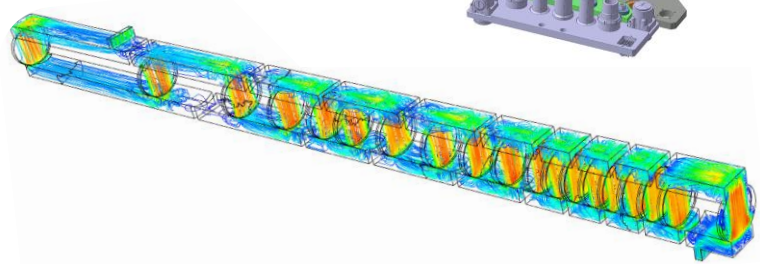

Target prototype design

- **Target core blocks production**
  - Complex manufacturing process (Hot Isostatic Pressing)
  - Machining of refractory metals challenging
  - Reception of the final target blocks in July 2018

- **Fully compatible with remote handling**
  - Lifting of the target for removal
  - Remote disconnection of the interfaces
  - Radiation level O(Sv/h) after 2 months
  - **Placed on motorized support**

  → Removed from beam after operation

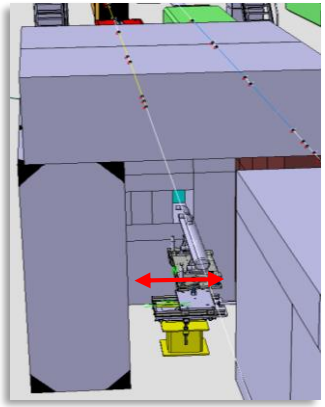

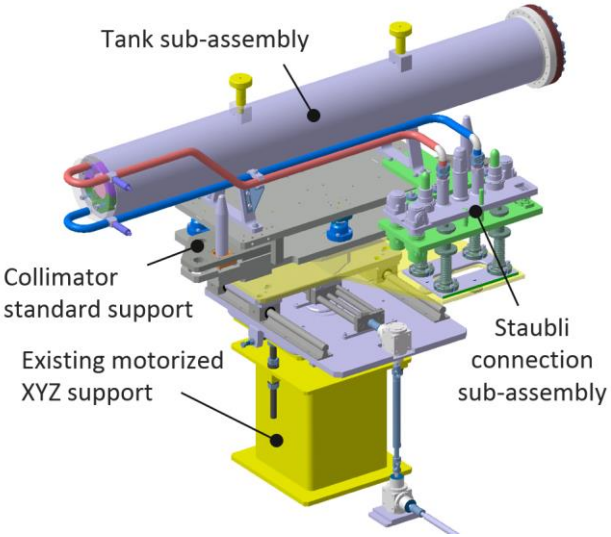

Target prototype beam parameters

Baseline characteristics	Final BDF target	T6 target proto
Proton momentum [GeV/c]	**400**	**400**
Beam intensity [p+/cycle]	$4.0 \cdot 10^{13}$	$3.0 - 4.0 \cdot 10^{12}$
Beam dilution	4 circular sweeps / s	No
Cycle length [s]	7.2	7.2
Spill duration [s] (slow extraction)	1.0	1.0
Average beam power [kW]	**350**	35
Average beam power during spill [MW]	2.56	0.26
Beam size (H/V) [mm]	8/8	3/3

→ Objective is to reach representative level of temperatures and stresses despite lower intensity & lack of dilution

Target prototype vs. final target

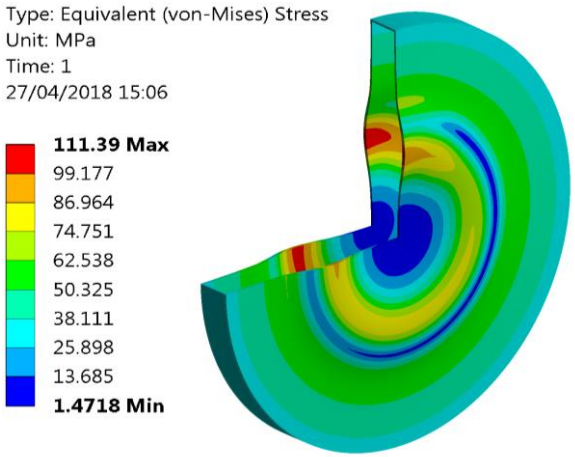

Final BDF target

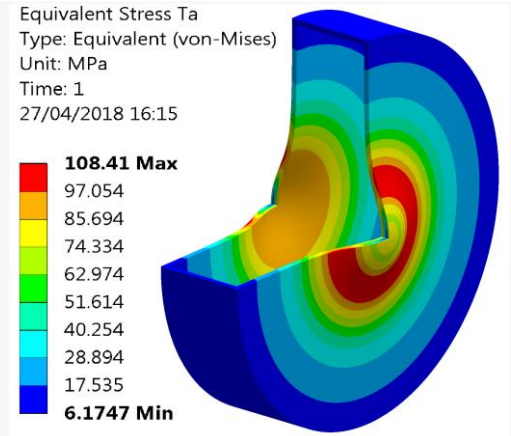

BDF target prototype

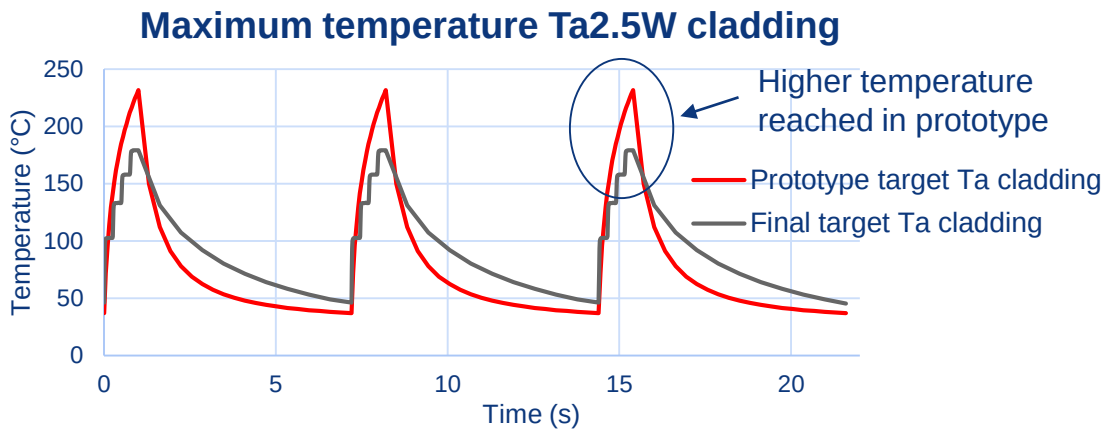

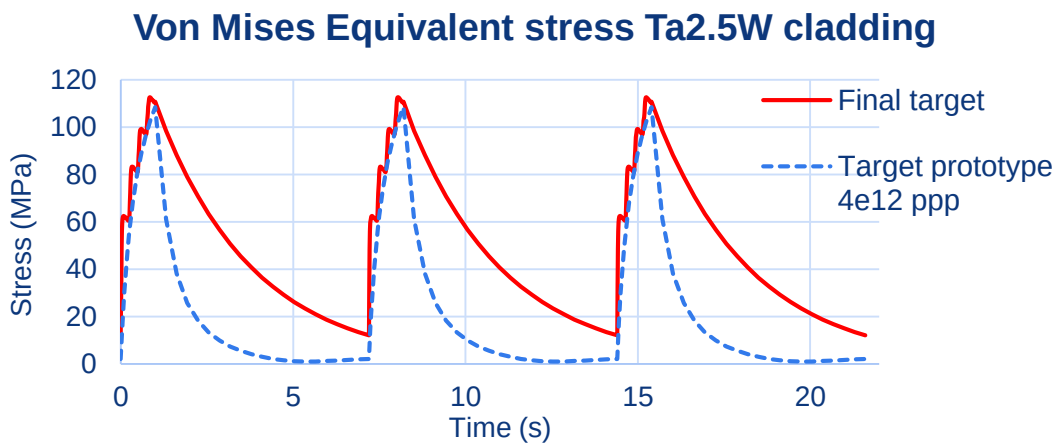

Reasonable approximation of the level of stresses in the core and cladding materials

Target prototype instrumentation

- Validate the simulations of the induced *strain* and *temperature* rise over 4 blocks
  - Block #4 – TZM core, Ta2.5W cladding
  - Block #8 – TZM core, Ta cladding
  - Block #9 – TZM core, Ta2.5W cladding
  - Block #14 – W core, Ta cladding

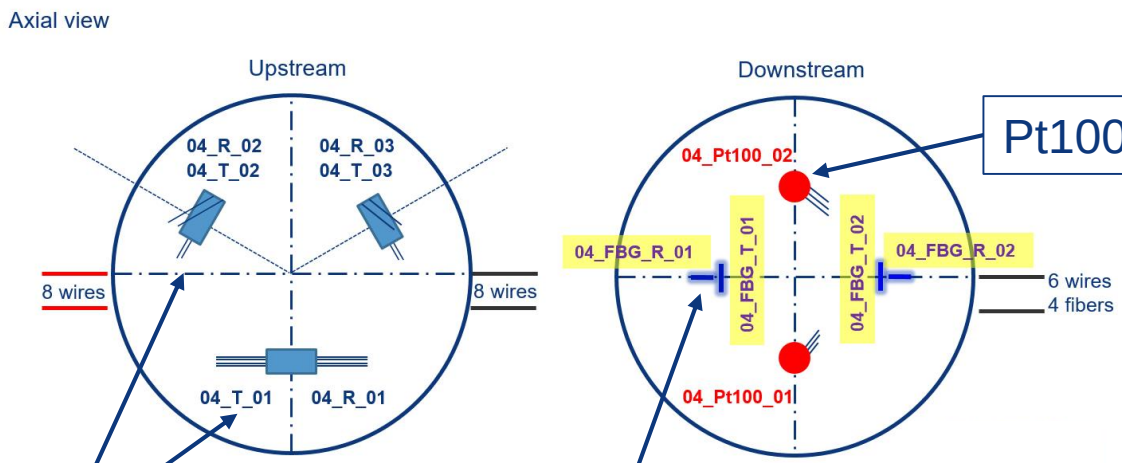

Pt100 (temperature)

Strain gauges (radial and transversal)

Optical fibers (strain)

M. Guinchard, L. Bianchi (EN/MME)

Target prototype instrumentation

- Challenging environmental conditions:
  - Pressure: **22 bar**
  - Flow rate: **4.2 m/s**
  - Radiation dose (blocks): **10 – 100 MGy after 4 months**
  - Radiation dose (feedthroughs): **100 kGy after 4 months**

→ R&D activities to validate the instrumentation

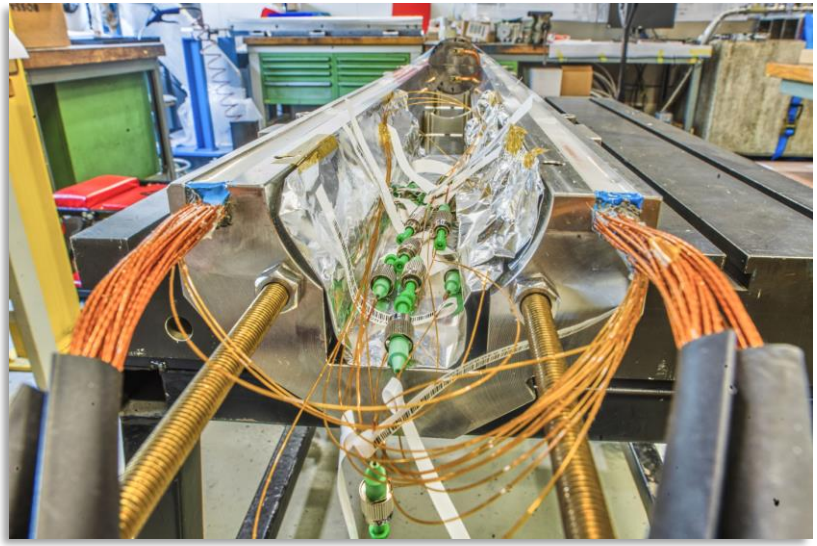

Target prototype assembly

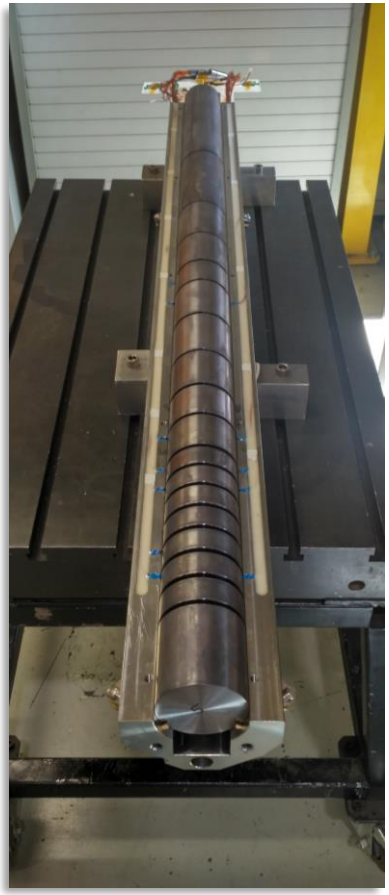

Target prototype installation

- <u>September 2018:</u> Prototype installation

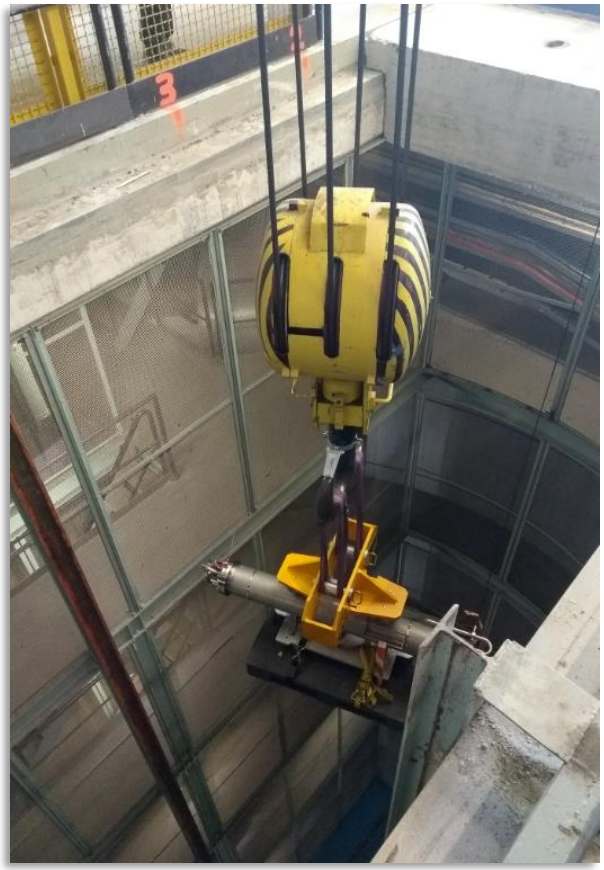

Target prototype installation

- September 2018: Prototype installation
  - Fully remote installation
    - Robot + crane
  - Prototype shielding installation
  - Cooling skid shielding installation
    - **R2E events** detected after installation → sudden stop of the pump during physics operation

      → Risk of target failure

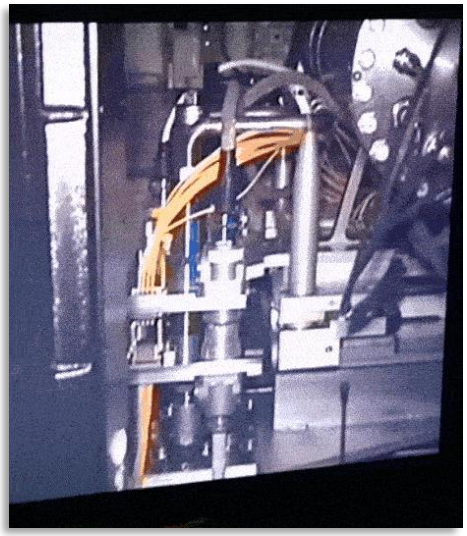

BDF prototype beam tests

- 3rd October 2018: **1st MD day**
  - Successful target operation
  - BTVs key for beam tuning
    - Beam 2 mm down from target center

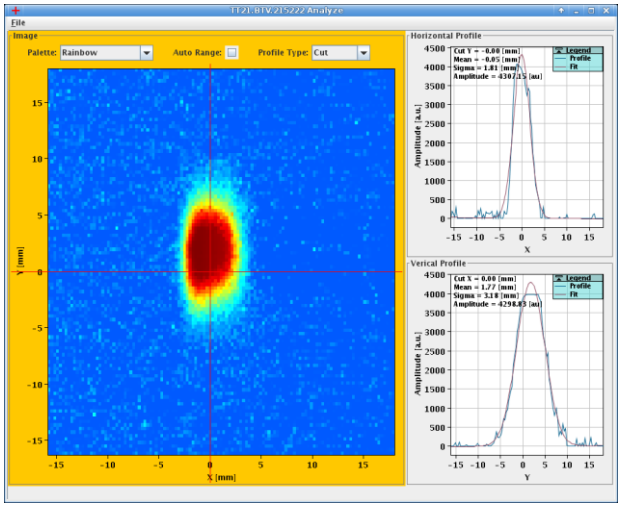

  - **SHiP cycle achieved: 1 pulse every 7.2 seconds**
  - Total cumulated POT ≈ 1E16
    - **POT goal = 3E16**

→ Meaningful target irradiation

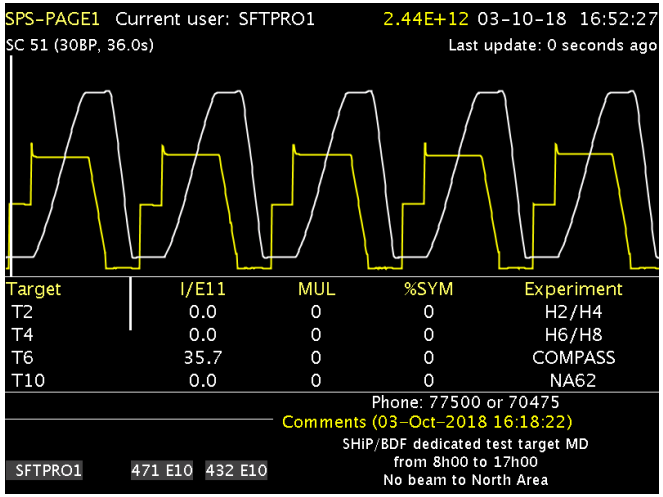

BDF MD day 1

- Target instrumentation successful
  - Almost all sensors survived **high levels of radiation, pressure, temperature and water speed**

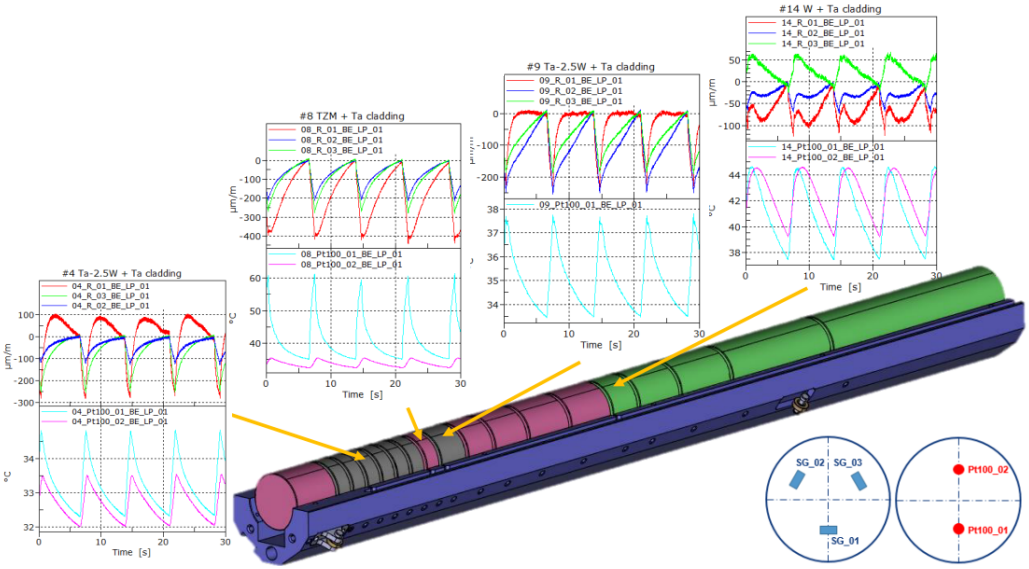

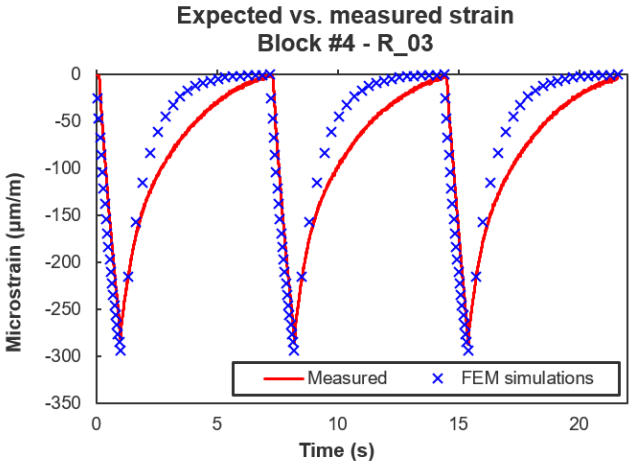

- Instrumentation results **coherent with FEM simulations**

BDF MD day 2

- 24th October 2018: 2nd MD day
  - **Upstream BTV camera failed** before first shots due to radiation exposure
    - Beam tuning performed with downstream BTV
    - Challenging beam positioning and beam size not reliable
    - Complex correlation with FEM
  - Total of 5.5h dedicated beam
  - **Total POT** after MD **= 2.4E16**

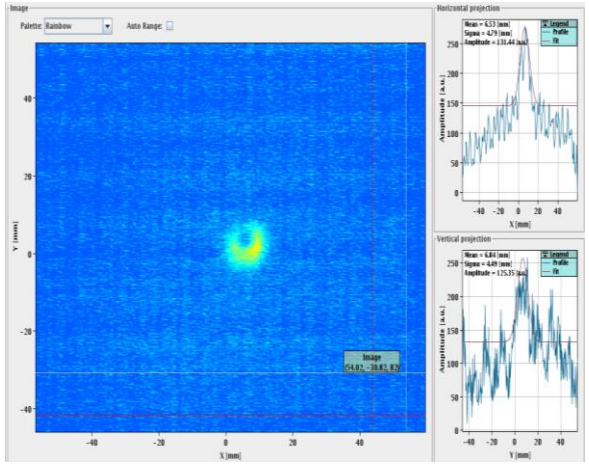

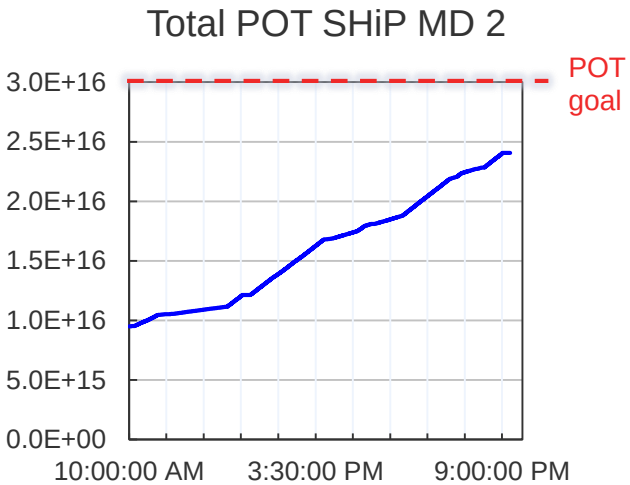

BDF MD day 2

- **Cooling skid pump failure** due to R2E events
  - Interlock implemented into SIS to avoid target failure
    - Beam trip after **4 pulses on target without cooling**
  - High temperatures and stresses reached
  - Successful restart, operation resumed

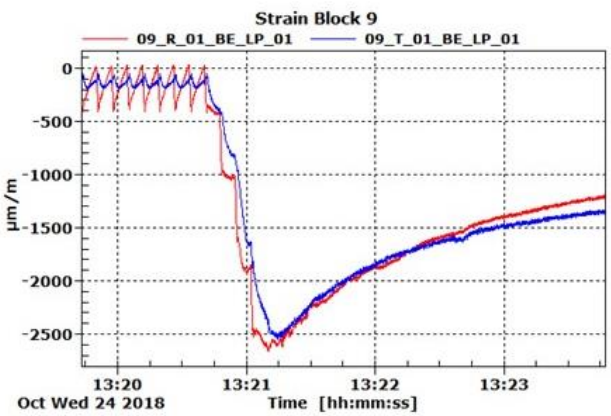

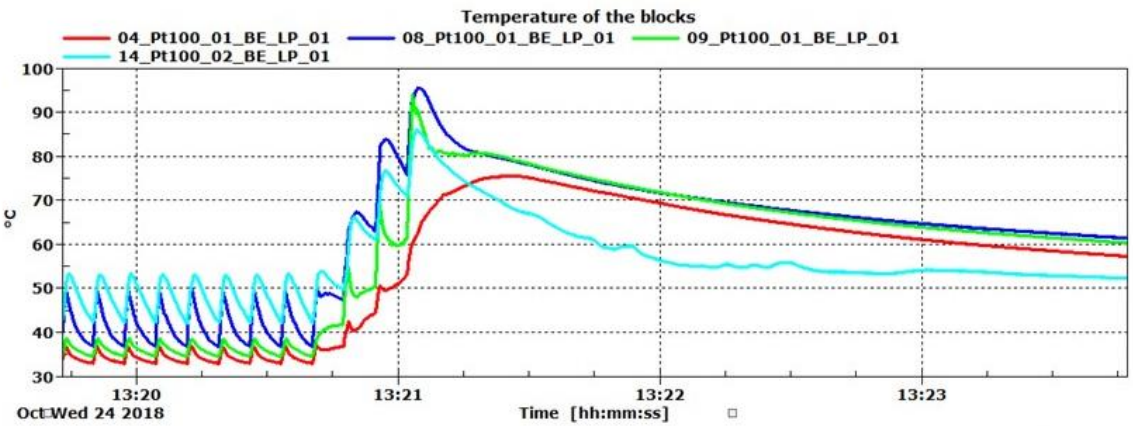

BDF MD day 3

- 7th November 2018: 3rd MD day
  - 2h of non-dedicated beam
  - **Exchange of upstream BTV camera** performed
  - Instrumentation measurements crosscheck
    - **Iterations with beam impact at different positions**

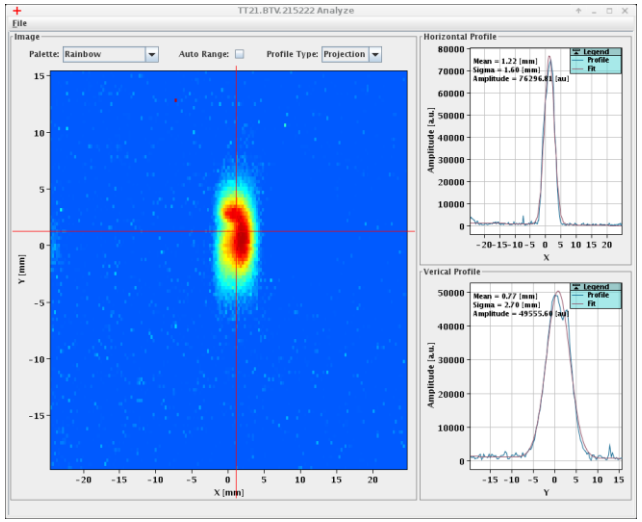

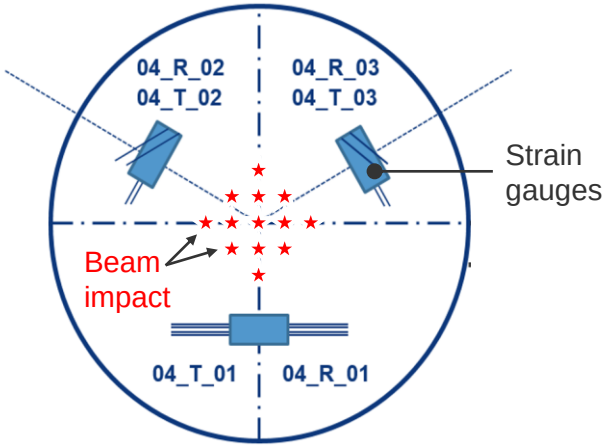

Next steps – Post Irradiation Examination

- Remote extraction of some of the target blocks for PIE
  - Radiation level of blocks after 2 months ≈ O(Sv/h) @contact
- Objectives of the PIE
  - Determine the effect of stress, thermal fatigue, irradiation and cooling on:
    - Dimensional stability
    - Cladding surface state
    - Cladding-target interface properties
    - Bulk material properties

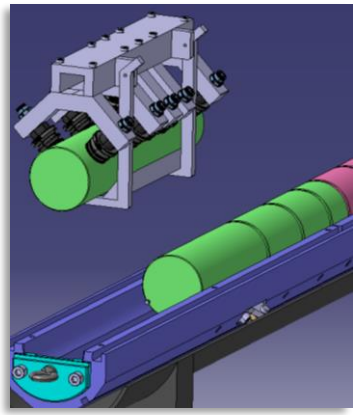

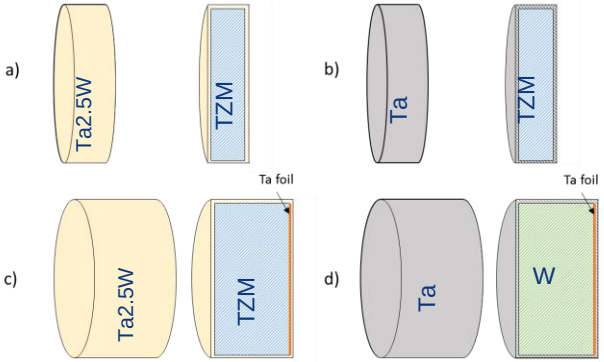

Next steps – Post Irradiation Examination

- Activities foreseen
  - Metrology – microscopy
    - Dimensional measurements
    - Roughness measurements
    - Optical microscopy
  - Non-destructive testing
    - Ultrasonic testing
    - Dye penetrant testing
  - Destructive testing
    - Microscopy
    - Mechanical testing
    - Thermal conductivity

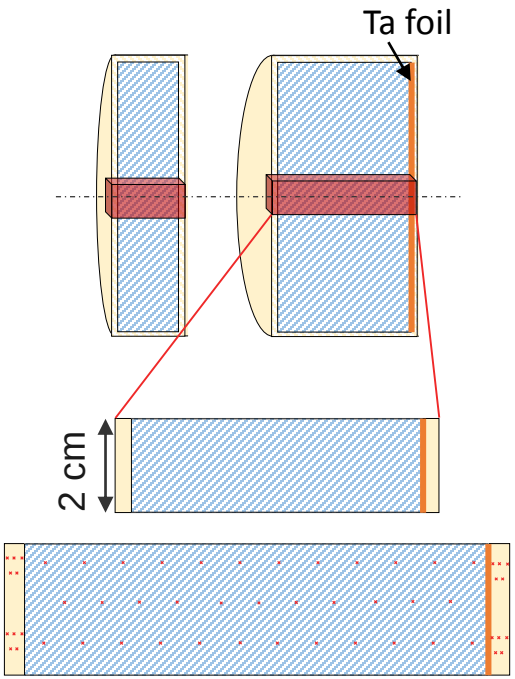

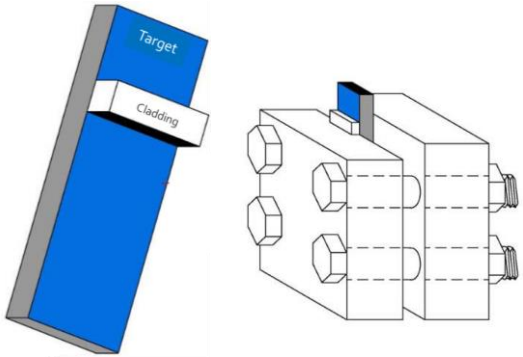

Next steps

- Activities in 2019-2020
  - PIE of irradiated materials – **BLIP**
    - Irradiated TZM and Ta2.5W samples

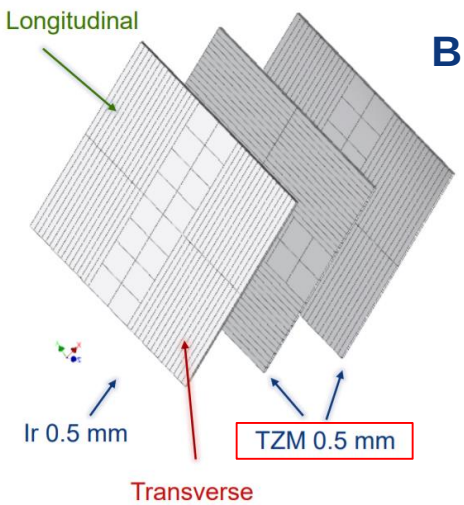

BLIP Run 1

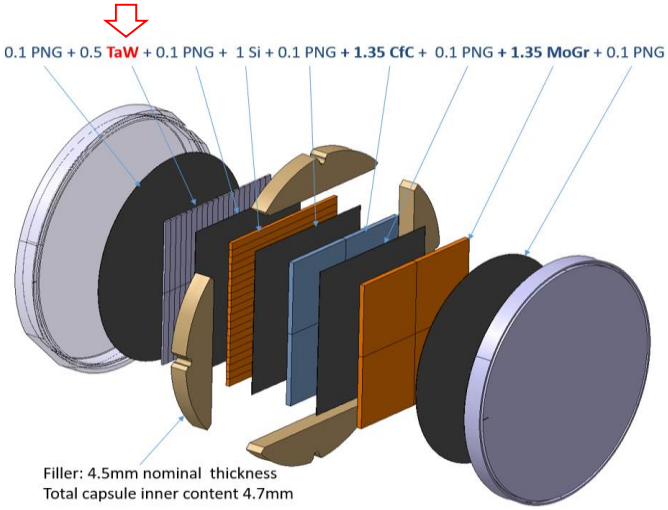

BLIP Run 2

E. Fornasiere

  - Complete **mechanical characterization of cladded target materials** for BDF target prototype

Conclusions

- BDF downscaled prototypes successfully built and characterized bringing **profitable results**
- **Validation of HIP** to obtain reliable interfaces cladding-target and target-target materials
- Validation of a **new material** (Ta2.5W) and **new configurations** (target to target)
- High importance of **interfacial aids** and **HIP cycle** in the bonding

- BDF target prototype design, manufacture and installation successfully performed
- **3 BDF MD successful**: target prototype operation under beam for >14 h and lots of data gathered
- **Target blocks PIE** will elucidate the target materials behavior under irradiation conditions similar to the final BDF target

Thank you for your attention!

CERN | EN ENGINEERING DEPARTMENT