Status of the cryostat for the HL-LHC insertion magnets and modal analysis

Délio Ramos and Massimiliano Moretti

WP2 Meeting, 17th April 2018

The “triplet” cryostat string

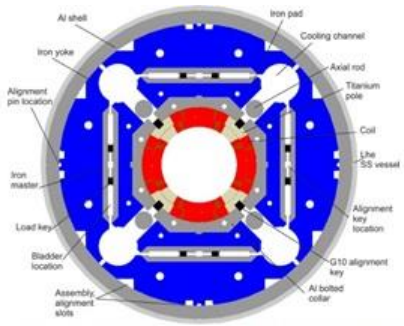

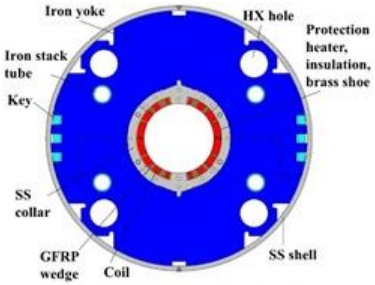

Ø 630 mm
~ 10.1 / 9.8 m length

Ø 570 mm
~ 7.4 m length

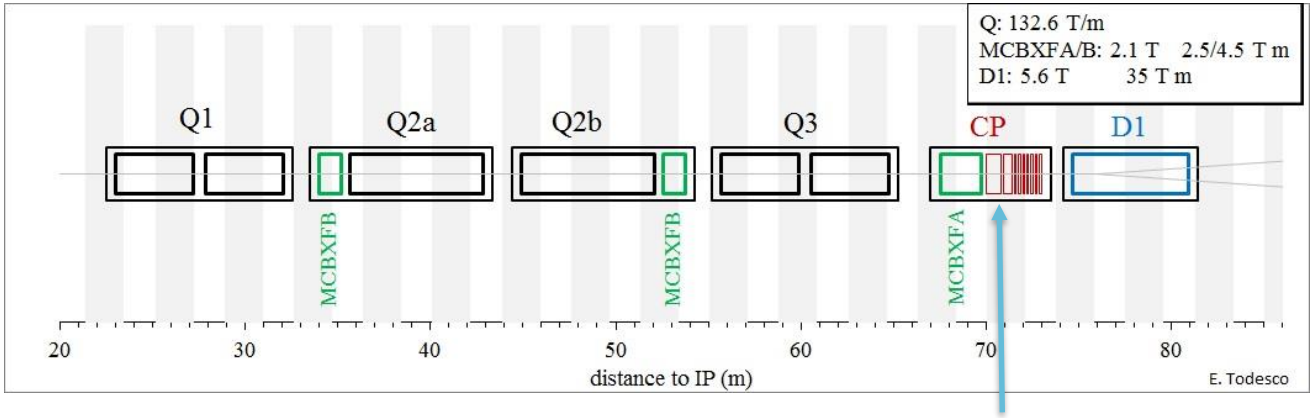

~ 2 ton per meter length

Ø 630 mm
6.1 m length

LHC triplet and dipole cross sections

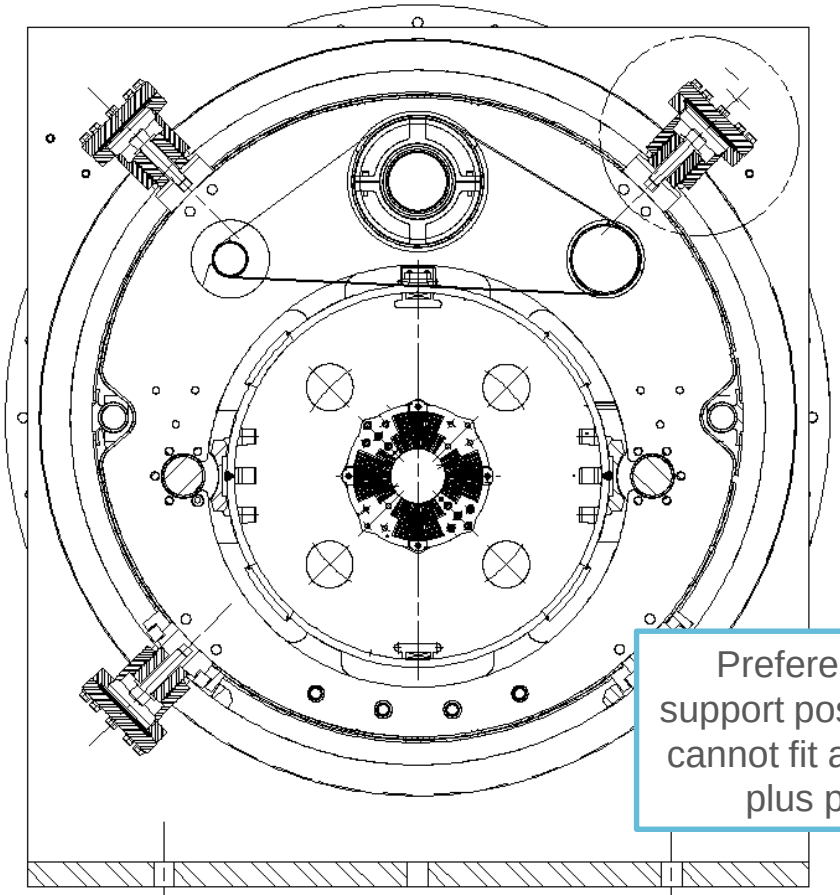

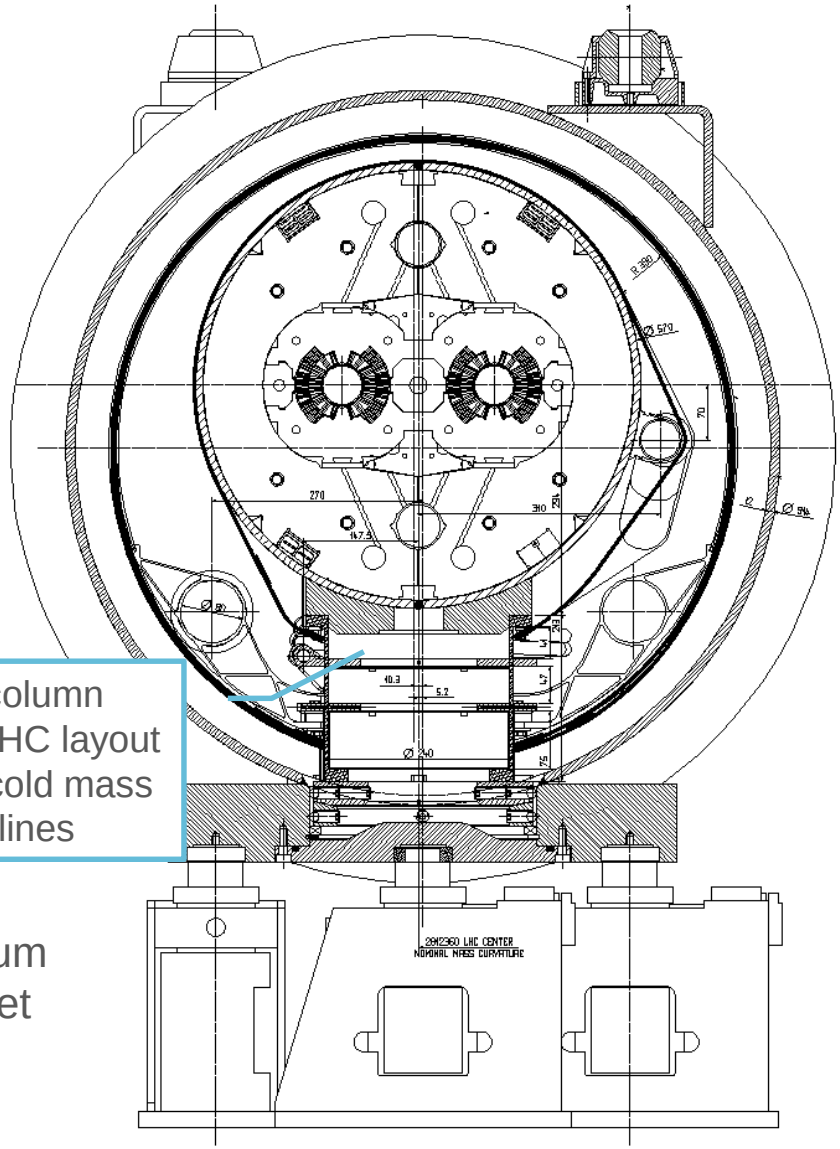

Preference for column support posts but LHC layout cannot fit a larger cold mass plus pumping lines

Alignment principle: The magnet postion w.r.t vacuum vessel is measured (fiducialization); the cryo-magnet is then positioned in space by moving the whole assembly on support jacks. Cold supports are not adjustable.

HL-LHC insertion region cross-section

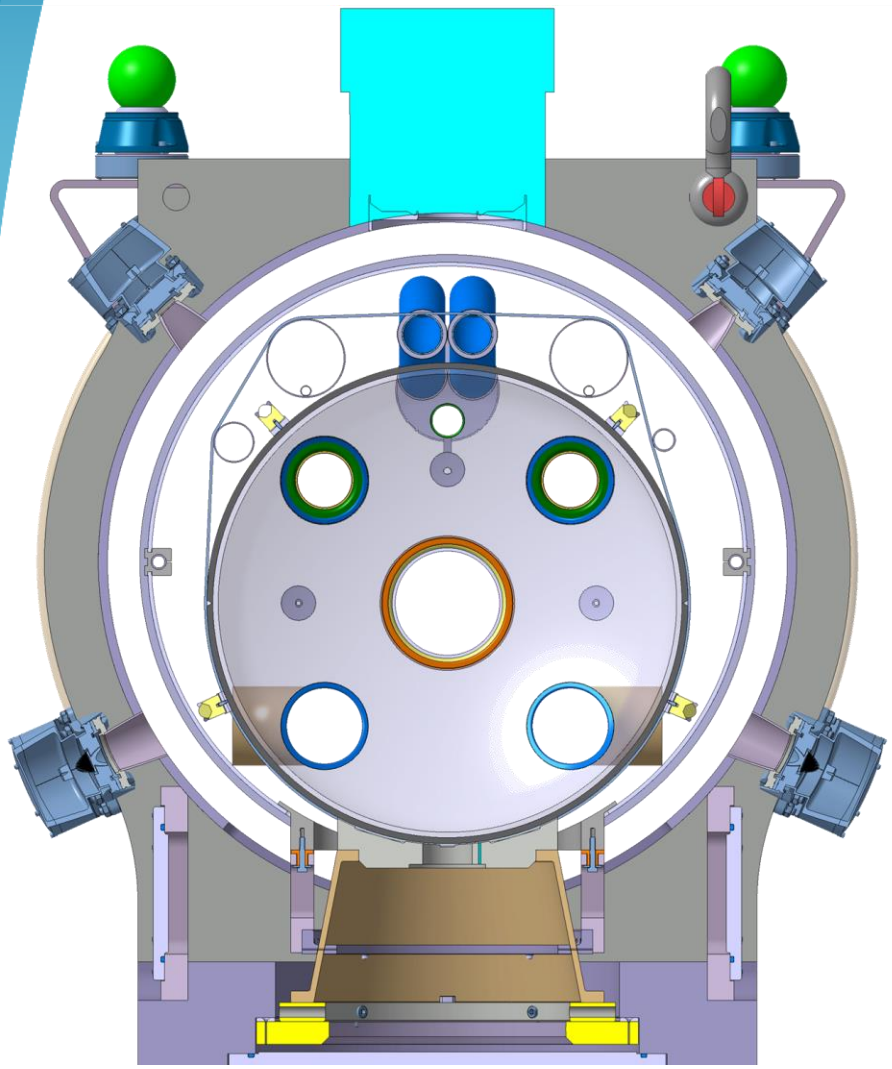

- Column support posts
  - Reinforced thickness due to high longitudinal pressure end loads
  - Conical for higher stiffness, hence better stability
  - Compression stiffness: **488 kN/mm (+ 77%)**
  - Transverse stiffness: **52 kN/mm (+ 148%)**
  - 1st Natural frequency: **8.8 Hz (+ 110%)**
- Particular vacuum vessel design allowing for larger cold mass and piping inside a cryostat of the same diameter
- Direct measurement of cold mass absolute position with frequency scanning interferometry
- Special assembly procedure

Cryostat design (ex. Q2 IR1 Right)

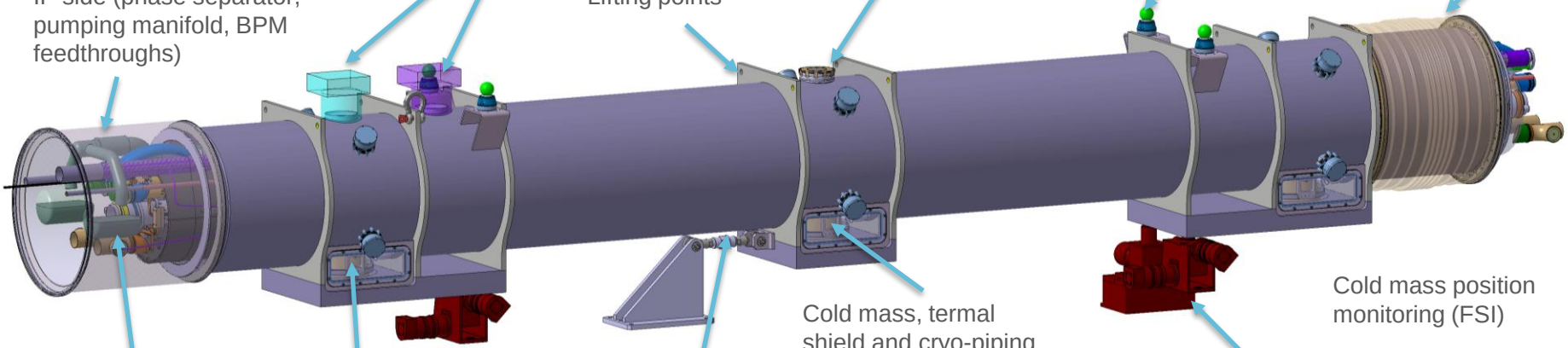

Can be mounted on either side of the central support post
Designed to work in compression and tension
Functional specification https://edms.cern.ch/document/1856323/0.1

- 13 tonne on either direction
- Adjustment range +/-10 mm
- Resolution +/- 0.05 mm with differential screw
- No adjustment under load
- Not remotely operated

Cryostat supports and vacuum vessel design

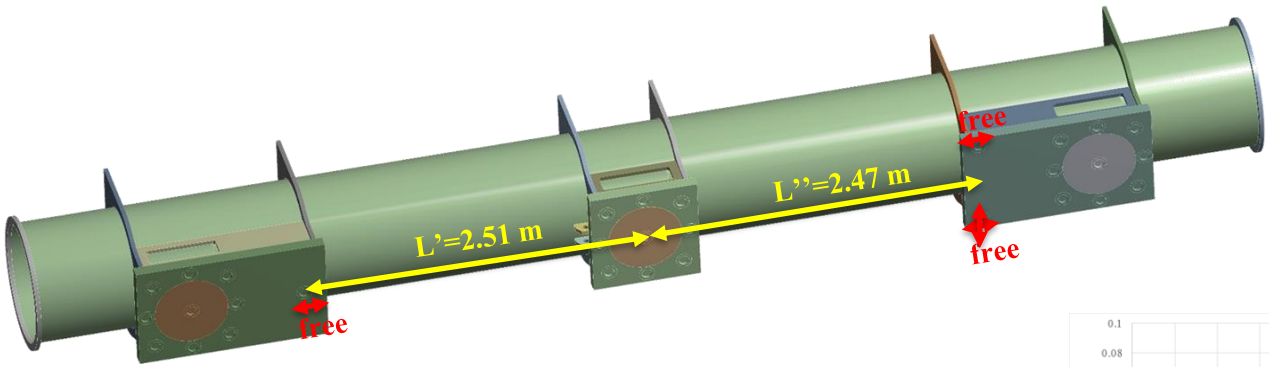

- Cryostat interface meeting 29/8/2017: decision to implement isostatic support (3 jacks instead of 4) https://indico.cern.ch/event/661726/
- Small difference in length between Q1/3 and Q2: same interfaces to simplify assembly tooling
- Optimisation of jack locations for minimum cold mass deformation presented at WGA#3 18/10/207

  https://indico.cern.ch/event/666376/
  - Goal: Interface points between cold mass and vacuum vessel deform evenly
  - Total displacement of cold mass interfaces **~130 micron**
  - Contribution of vacuum vessel deformation to cold bore misalignmment: **~60 to 80 um**

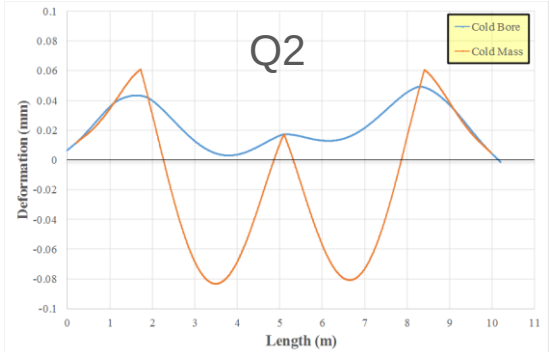

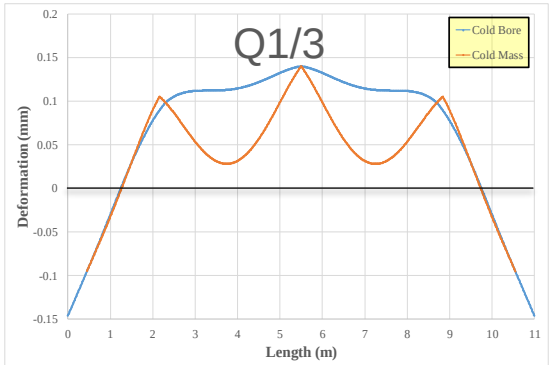

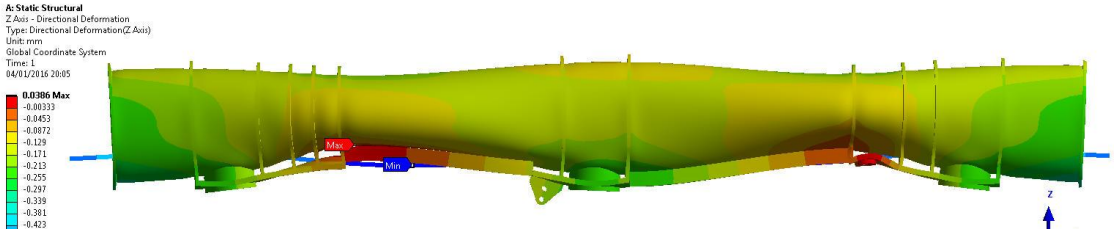

Fixed support post

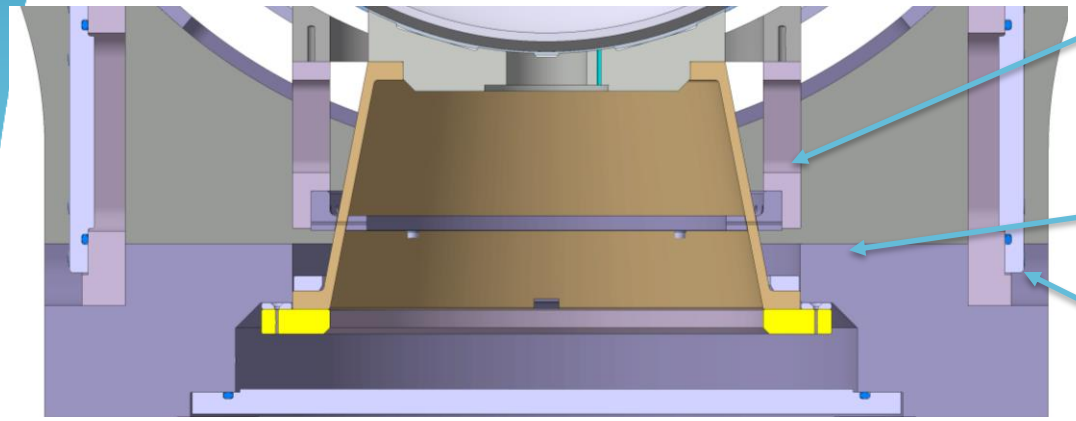

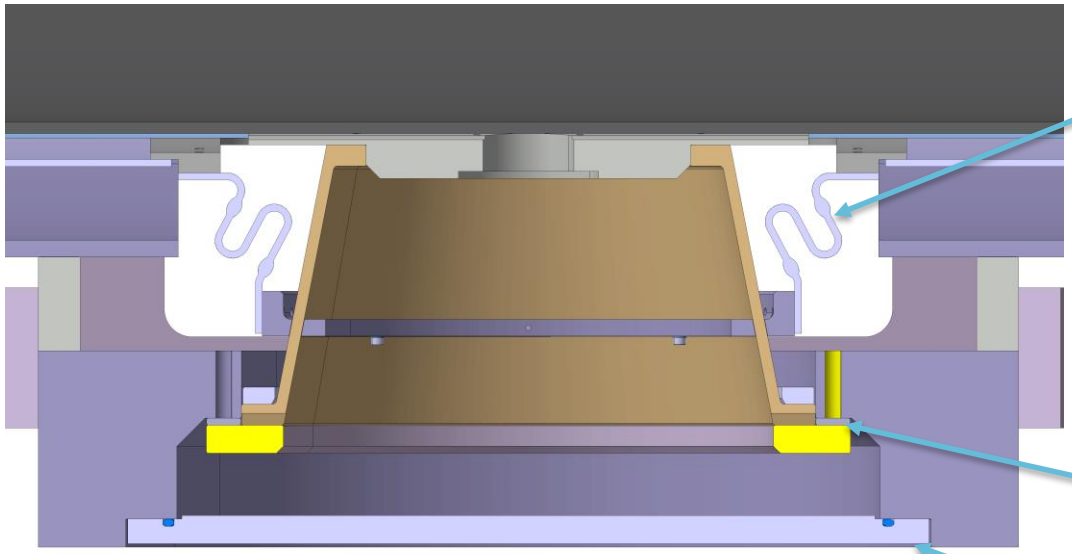

Conical GFRE post

Heat intercept and termal shield support (“cost free” supporting of the termal shield)

Access door in vacuum vessel for assembly

Thermalisation straps

Top flange bolted to cold mass, bottom flange bolted to vacuum vessel

Shims for out of straigtness NC mitigation on vertical plane

Vacuum vessel cover

Sliding support post

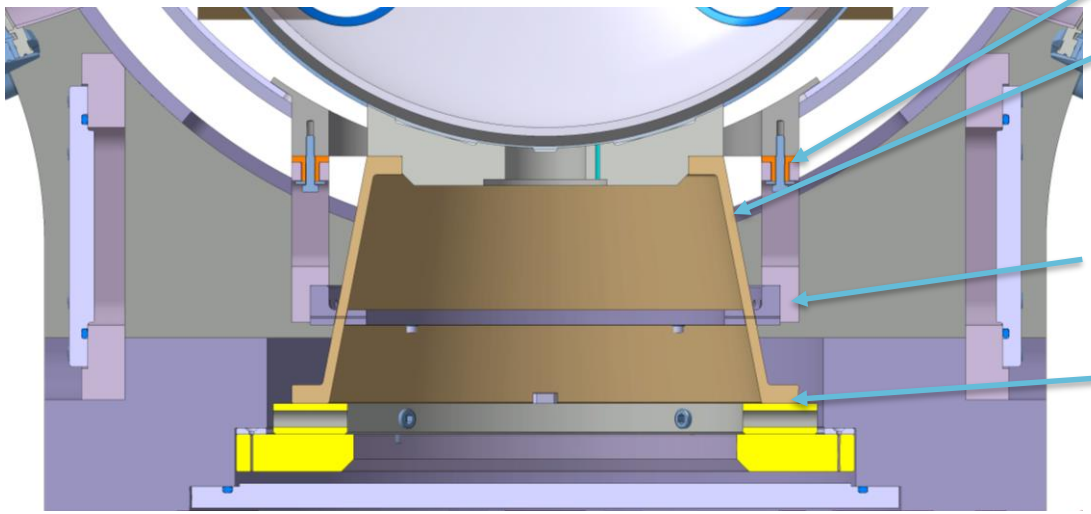

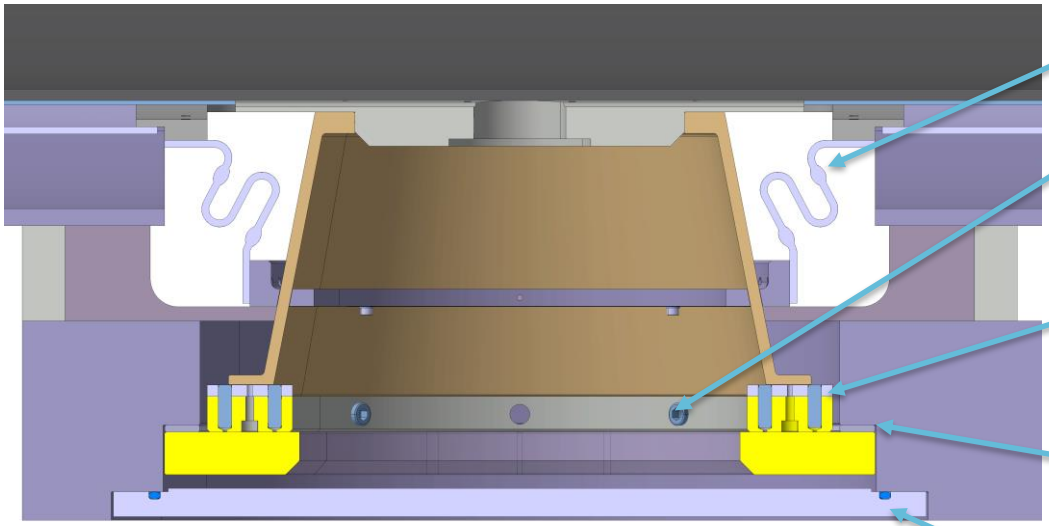

Sliding termal shield guides

Conical GFRE post

Heat intercept and termal shield support (heat loads to support the termal shield

Sliding surface

Top flange bolted to cold mass

Thermalisation straps

Straightness NC mitigation in horizontal plane

Guiding key and slot

Shims for out of straigtness NC mitigation on vertical plane

Vacuum vessel cover

Interconnect expansion joints

- Universal expantion joints for **minimum impact on alignment**
- Specifications:
  - Design pressure (PS) : from 4 to 25 bar internal relative pressure
  - Axial cyclic movements up to 46mm (500 cycles)
  - Temperature range : [1.9 K ; 300 K]
  - Nominal diameters : from Ø10 to Ø110 mm
- Quantity:
  - up to 100 bellows and flexibles per side
- Design optimisation:
  - Minimise outer diameter for integration purposes
  - Minimise axial and lateral spring rates
  - Minimise number of plies
  - Minimise the number of different bellows
- Bellows project progress status:
  - Dedicated pre-design software developed based on European Pressure Directive (EN13445 & EN14917+A1).
  - Most used bellows are pre-designed and loads evaluated
    - Axial rigidity up to 250 N/mm per universal expansion joint
  - Exceptional cases under study: End of Q1, Interconnection equipped with jumper, interface with DFX

Software interface for bellows design optimisation

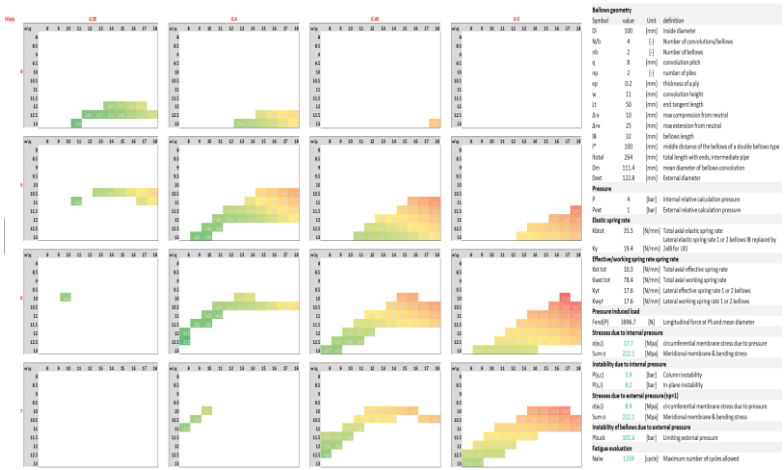

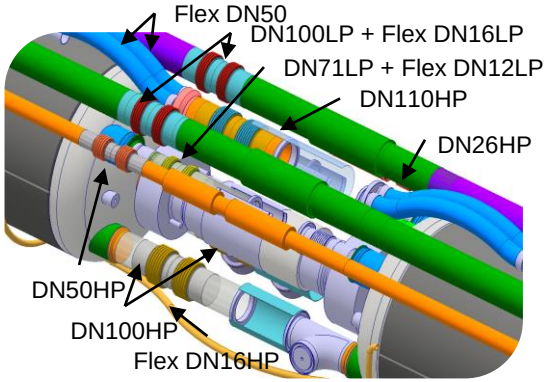

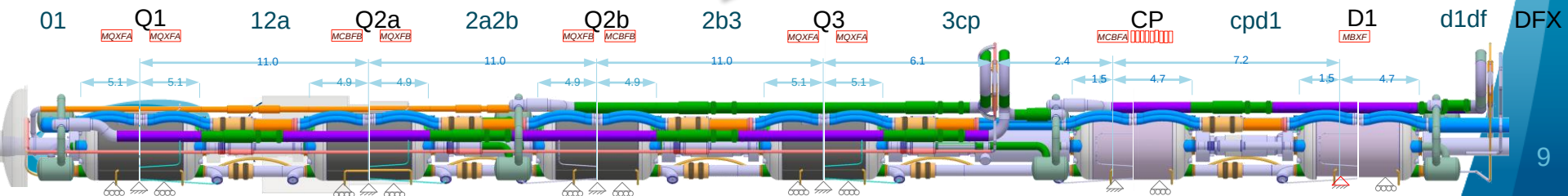

Modal analysis – Horizontal plane

N.	Mode direction	Modal shape	LHC Dipole	HL-LHC Triplets	Additional Comments
1)	Lateral swing	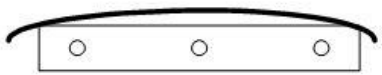	4 Hz	8.8 Hz	--
2)	Lateral	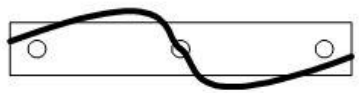	8 Hz	13 Hz	Different cold mass deformation
3)	Lateral	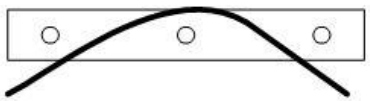	8 Hz	14 Hz	--
4)	Lateral		14 Hz	26 Hz	--
5)	Lateral swing	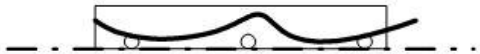	26 Hz	27 Hz	Different cold mass deformation
6)	Lateral	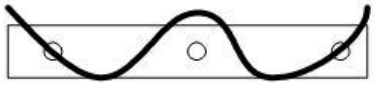	26 Hz	48 Hz	Vessel vibration
7)	Lateral		42 Hz	76 Hz	Vessel vibration

Horizontal plane modes

1) Lateral swing at 8.8 Hz

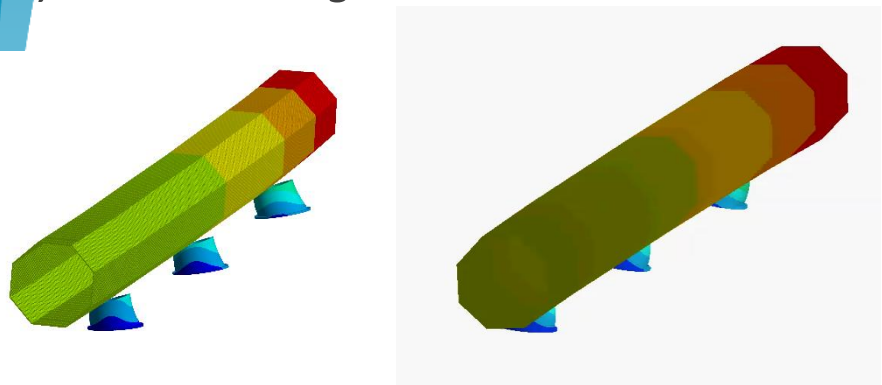

2) Lateral at 13 Hz

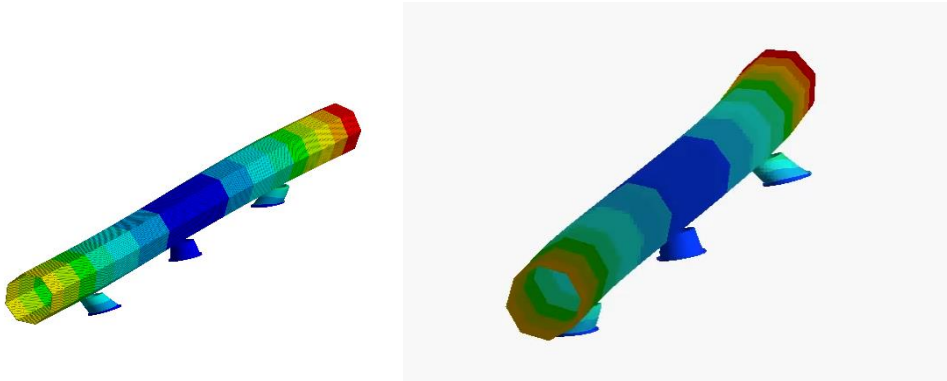

3) Lateral at 14 Hz

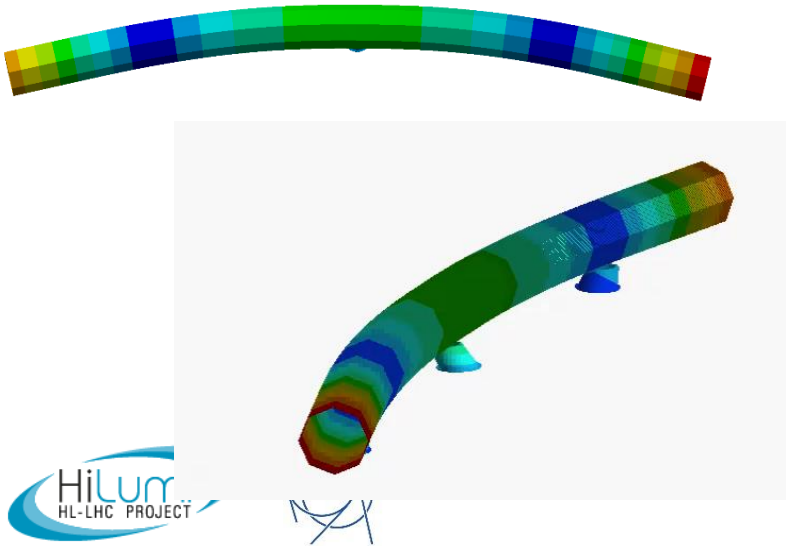

5) Lateral swing at 27 Hz

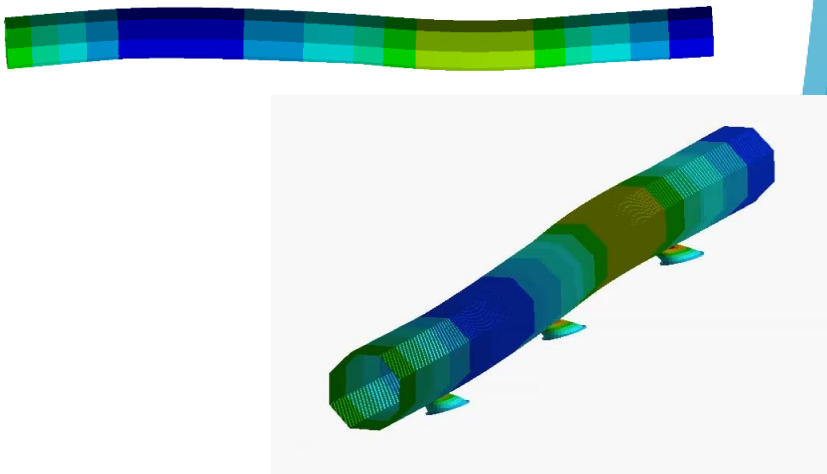

Modal analysis – Vertical plane

N.	Mode direction	Modal shape	LHC Dipole	HL-LHC Triplets	Additional Comments
1)	Vertical	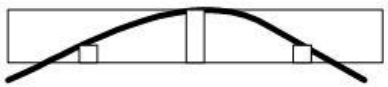	8 Hz	16 Hz	Vessel vibration
2)	Vertical & longitudinal	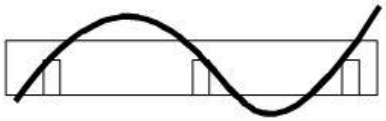	14 Hz	30 Hz	--
3)	Vertical	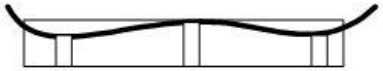	18.5 Hz	28 Hz	Slightly different modal shape
4)	Vertical	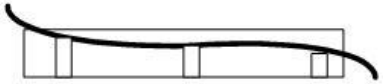	20 Hz	20 Hz	--
5)	Vertical		28 Hz	47 Hz	--
6)	Vertical		46 Hz	68 Hz	Vessel vibration

Experimental modal analysis of LHC dipole
by K. Artoos et al. EDMS 348871, 2002

Vertical plane modes

1) Vertical at 16 Hz

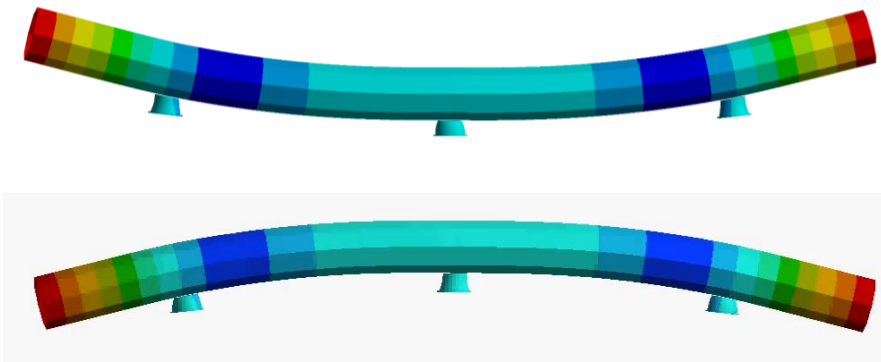

2) Vertical & Longitudinal at 30 Hz

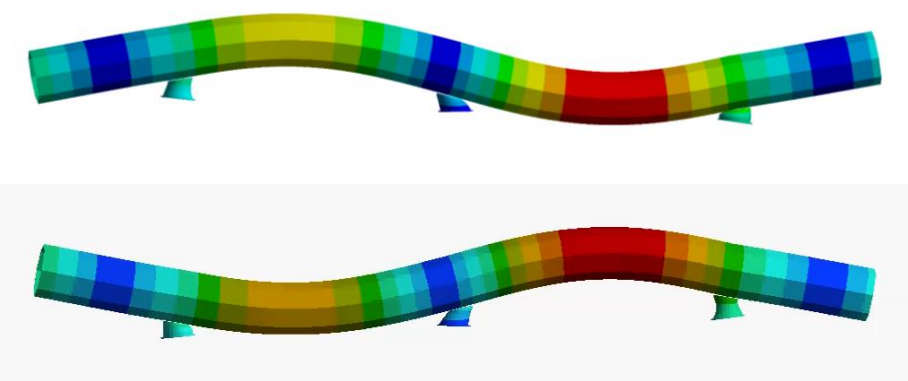

4) Vertical at 20 Hz

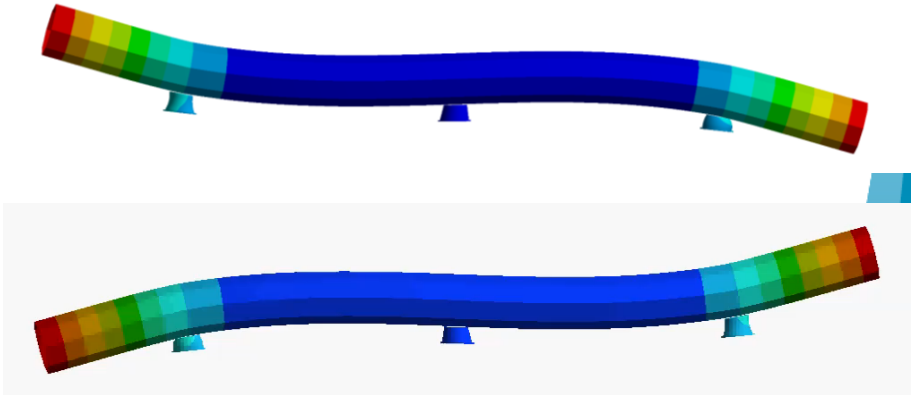

Modal analysis – Longitudinal & Others

N.	Mode direction	Modal shape	LHC Dipole	HL-LHC Triplets	Additional Comments
1)	Longitudinal		8 Hz	11 Hz	--
2)	Vertical & longitudinal	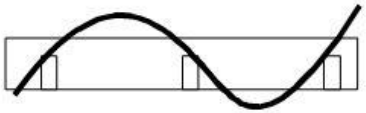	14 Hz	30 Hz	--

- **Torsional** cold mass deformation at 46 Hz
- First **vacuum vessel** modes at 35 Hz, 60 Hz, 63 Hz

Reference LHC cryodipole modal analysis:

[2] *K. Artoos, O. Calvet, O. Capatina*, **Experimental modal analysis and acceleration measurements during surface transport of a LHC cryodipole,** LHC-CRI Technical Note 2002-07, EDMS 348871

A concept of cryostat and cold mass that…

- **Fits in the tunnel** (same width as other LHC cryostats) and encloses all the cryogenic piping running along the string, including phase separators.
- Interconnects based on all welded seals (LHC solution), including space required for **cutting and welding** machines.
- Minimises work in the **tunnel**, by design.
- **Cold mass supports** based on LHC dipole and SSS concept. Sledge on rails cryostating principle.
- **Isostatic support** of the cryo-assembly, designed to accomodate pressure end loads (vacuum and quench) and allow remote alignment.
- Aims at **alignment stability** requirements comparable to those of the LHC SSS and cryo-dipole.
- Minimises the number of component and assembly **variants**.