DE LA RECHERCHE À L'INDUSTRIE

FCC week 2019

Block-coil 16T Design for the FCC

The European Circular Energy-Frontier Collider Study (EuroCirCol) project has received funding from the European Union's Horizon 2020 research and innovation programme under grant No 654305. The information herein only reflects the views of its authors and the European Commission is not responsible for any use that may be made of the information.

E. Rochepault,
on behalf of M. Segreti, C. Pes, M. Durante, C. Lorin
With contributions of the EuroCirCol collaboration

26/06/2019

EVOLUTION OF THE DESIGN

- FCC week 2017:

204 mm interbeam

750 yoke diameter

63 mm Al shell

- Review Oct. 2017:

194 mm interbeam

570 mm yoke diameter

100 mm Al shell

- Today:

250 mm interbeam

616 yoke diameter

72 mm Al shell +

20 mm SS shell

v1ari204

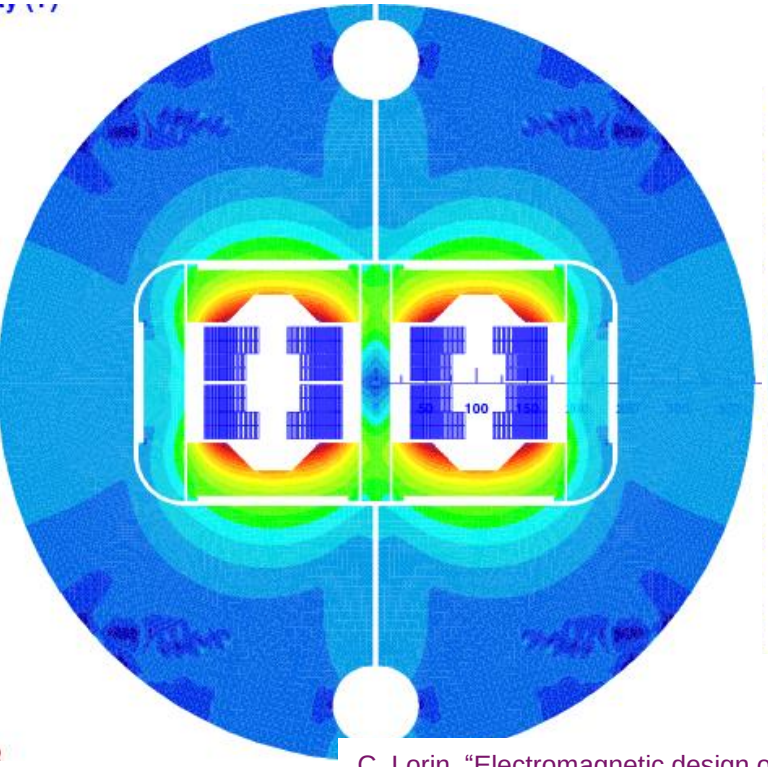

C. Lorin, "Electromagnetic design of the block coil option", FCC week 2017

MT2017

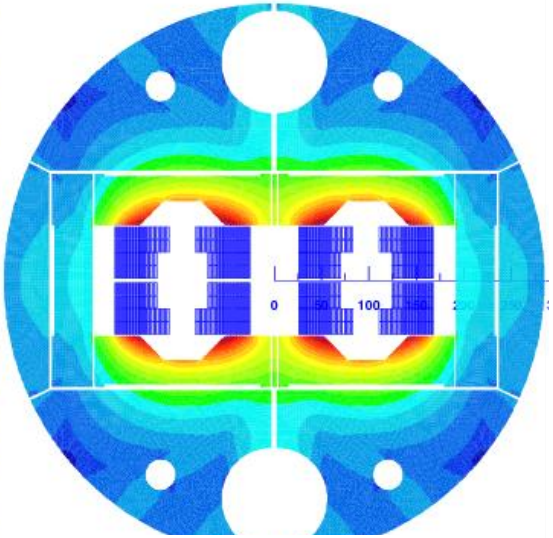

C. Lorin, "Block-coil electromagnetic design", ECC review 2017

v4ari250

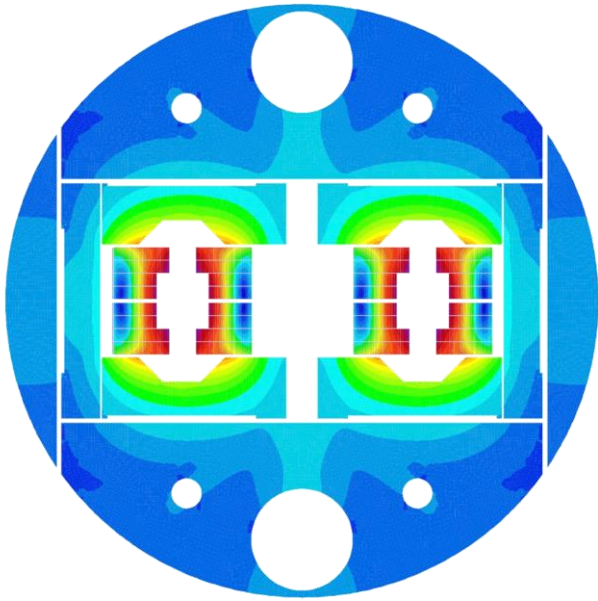

M Segreti et al., "2D and 3D Design of the Block-coil Dipole Option for the Future Circular Collider", IEEE TAS 2019

2D Magnetic Design – main parameters

Parameter (v4ari250)	Value	Unit
Inom	10.176	kA
Nturns	5+10+21+22	-
Bore thickness	1.9 (1.4 + 0.5)	mm
Mid-plane shim	2.07	mm
Conductor area	138	cm^2
Estimated weight[1]	7.86	kt
Yoke diameter	616	mm
Bcenter	16.00	T
Bpeak	16.73	T
Load-line margin[2]	>13.7	%
Diff. inductance	47.8	mH/m
Stored energy (2 apertures)	2595	kJ/m

[1]Area x 4578 dipoles x 14.3m x 8.7 t/m^3
[2]No saturation on the load-line

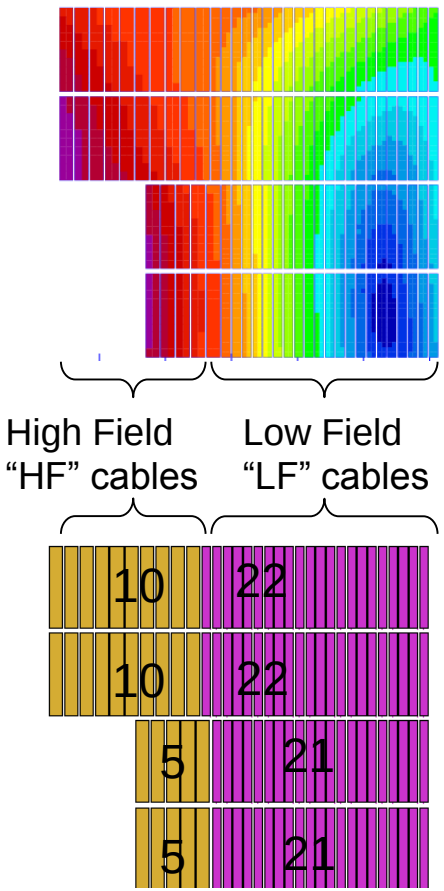

2D Magnetic Design – Protection

See T. Salmi *et al.* “Quench Protection of the 16 T Nb3Sn Dipole Magnets Designed for the Future Circular Collider.”, *IEEE TAS*, 2019.

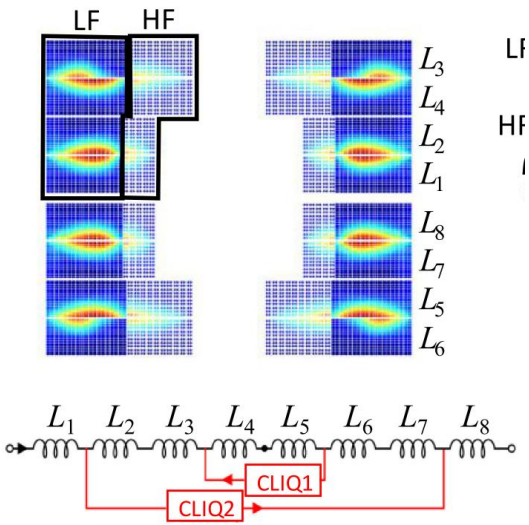

CLIQ

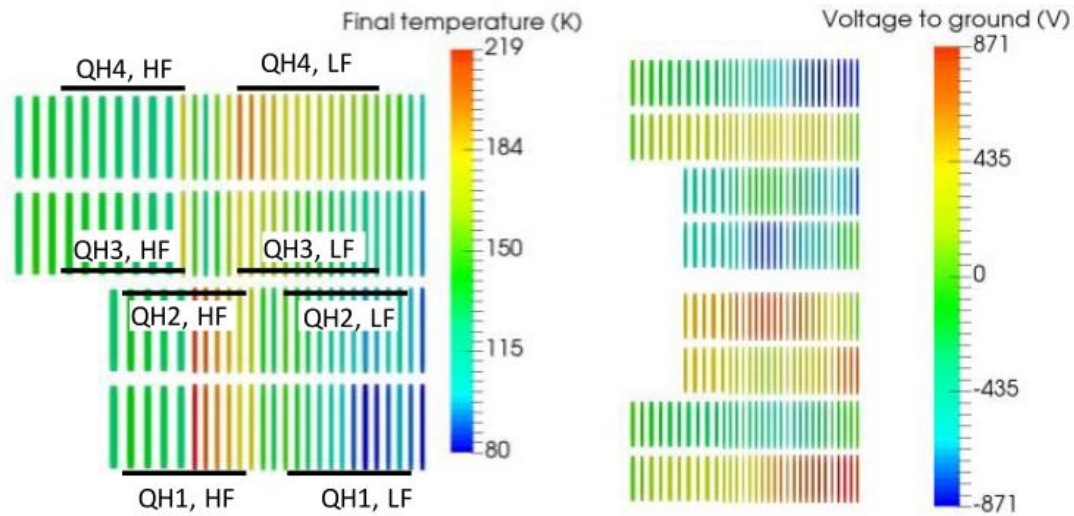

QH

	Scenario 1: CLIQ	Scenario 2: QH	Target
$T_{Hotspot}$	**281 K**	**321 K**	<350 K
V_{ground}	**730 V**	**870 V**	<1200 V

→ **Magnet protected with either CLIQ or QH**
→ **Margin in both cases**

2D Magnetic Design – Harmonics

- geometric
+ saturation
+ persistent currents
[units]

Operation	b2	b3	b5	b7	b9	others
Injection (3.3 TeV)	+9.4	-12.9	+2.7	-5.6	-2.4	<1
Target	±20	±10				±1
Collision (50 TeV)	-10.0	+2.7	-0.1	-1.9	-1.5	<1
Target	±20	±3	±3	±3	±3	±1

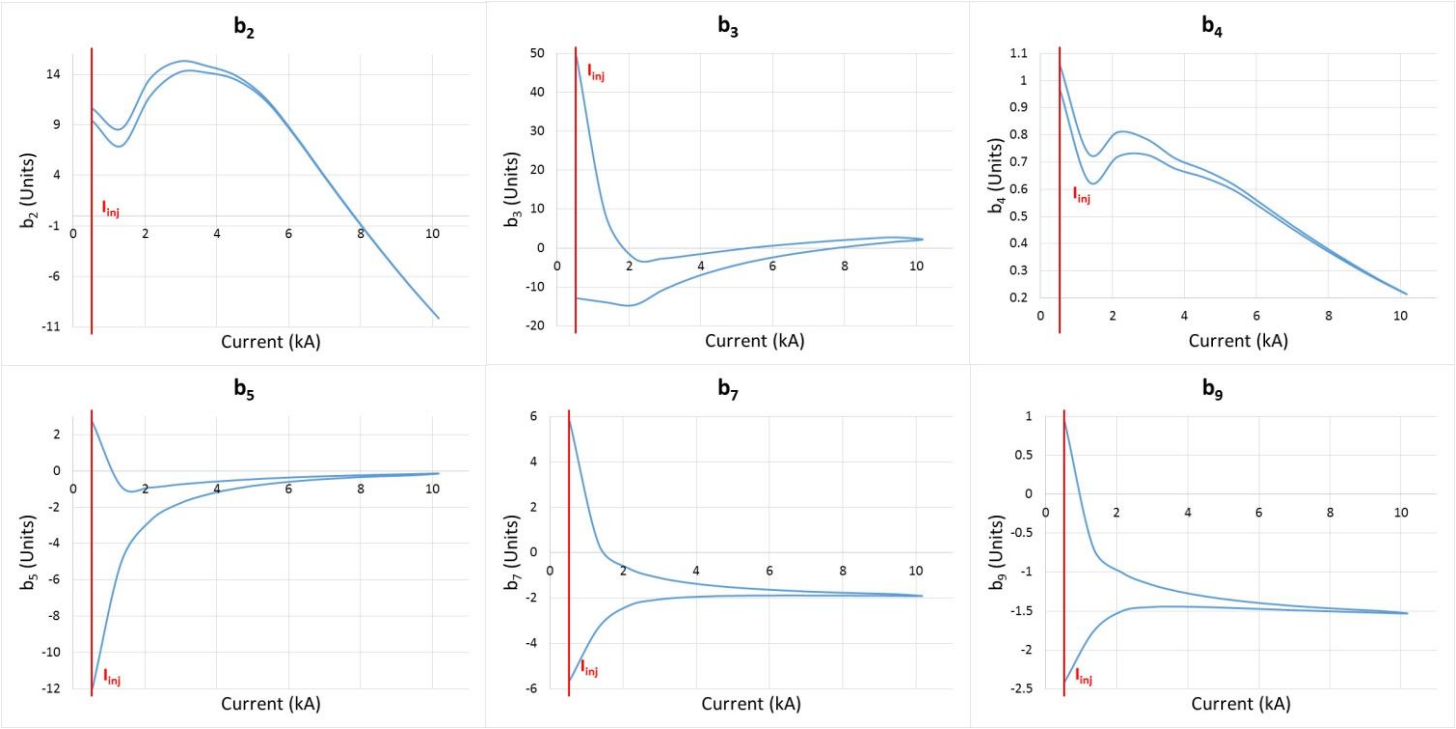

2D Magnetic Design – Harmonics

- Random:
  - baseline 50 µm standard deviation
  - 100 µm standard deviation also considered

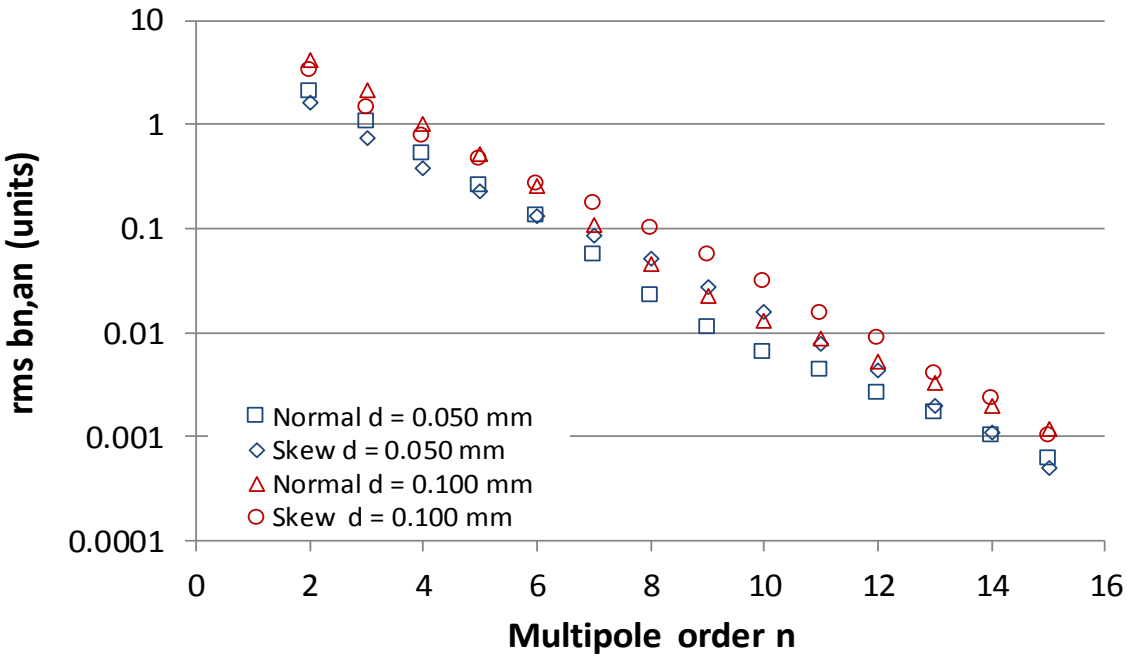

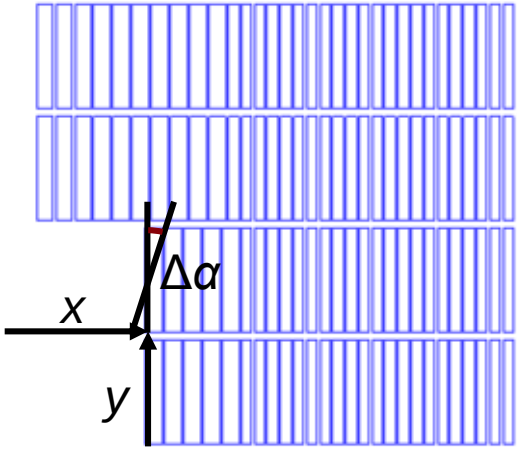

- $\Delta x = d$
  - $x_{min} = x - d$
  - $x_{max} = x + d$
- $\Delta y = d$
  - $y_{min} = y - d$
  - $y_{max} = y + d$
- $\Delta\alpha = 2d / w_{cable}$.
  - $\alpha_{min} = \alpha - \Delta\alpha$
  - $\alpha_{max} = \alpha + \Delta\alpha$

→ a2/b2 deviations 3/4 units in the worst case
→ a3/b3 deviations 1.5/2 units in the worst case
→ Other harmonic deviations <1 unit

Courtesy S. Izquierdo Bermudez

3D Magnetic Design – Harmonics

- Coil ends to the shortest
- Room in the spacers for internal joints
- Harmonics integrated with a magnetic length of 14.3 m

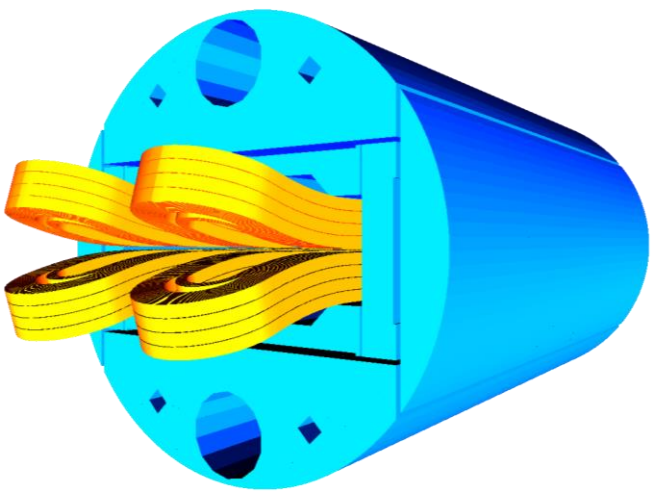

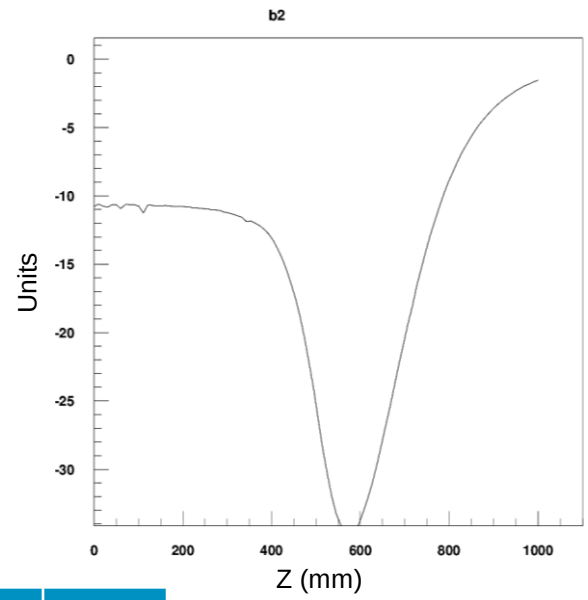

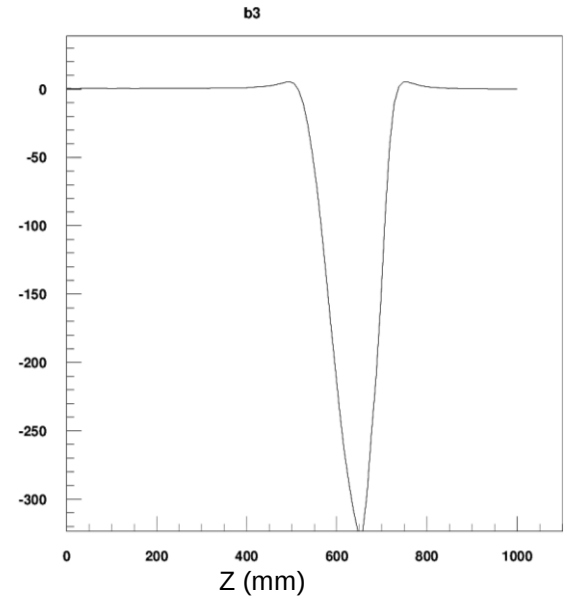

At collision	b2	b3	b5	b7	b9
2D	-10.0	**+2.7**	-0.1	-1.9	-1.5
3D	-11.3	**-2.5**	-0.6	-1.9	-1.5
Target	±20	±3	±3	±3	±3

- High peak due to coil ends but,
- **Mid-plane shim optimized** to :
  → increase b3 in the straight section
  → **Compensate b3 integral**

3D Magnetic Design – Summary

B_{peak1}, z=0	16.6	T
B_{peak2}, bend	15.9	T
B_{peak3}, tip	15.0	T
$L_{straight\ section}$	1.00	m
L_{iron}	1.00	m
L_{coil}	1.44	m
L_{mag}	1.28	m
$L_{coil\ end} = L_{coil} - L_{mag}$	80	mm (per end)

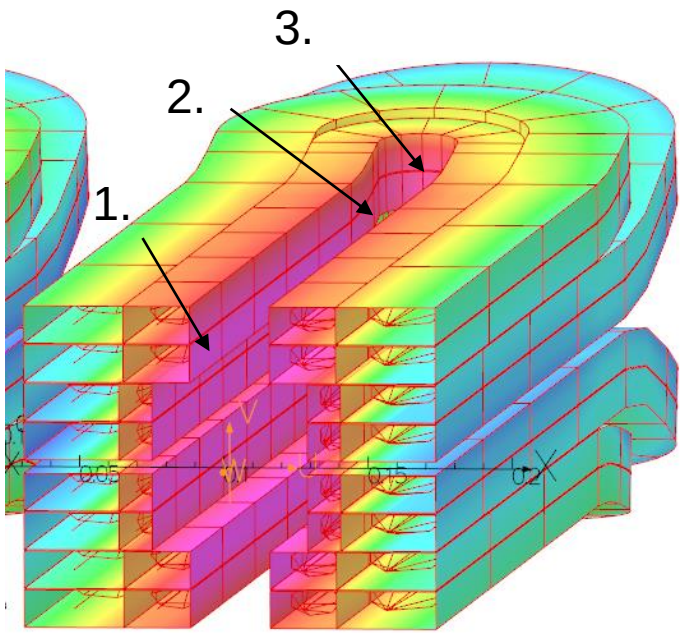

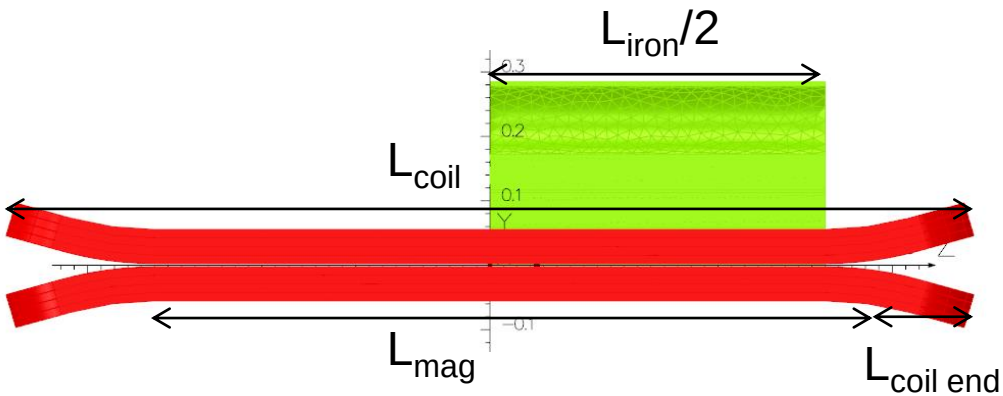

- **Short ends**
- **Margin (ΔB_{peak} > 0.7 T)**

2D Mechanical Design – Model

- ECC Coil properties (293K/4.2K):
  - Ex = 25 GPa / 27.5 GPa
  - Ey = 30 GPa / 33 GPa
- Pre-load:
  1. Bladders without SS shell
  2. 2 Horizontal + 2 Vertical keys
  3. Imposed displacement on SS shell bottom = -0.2 mm (270 MPa tension)
- Contacts:
  - Bonded: inside the coils, with the poles
  - Separation allowed with 0.2 friction: between the coils, with the structure

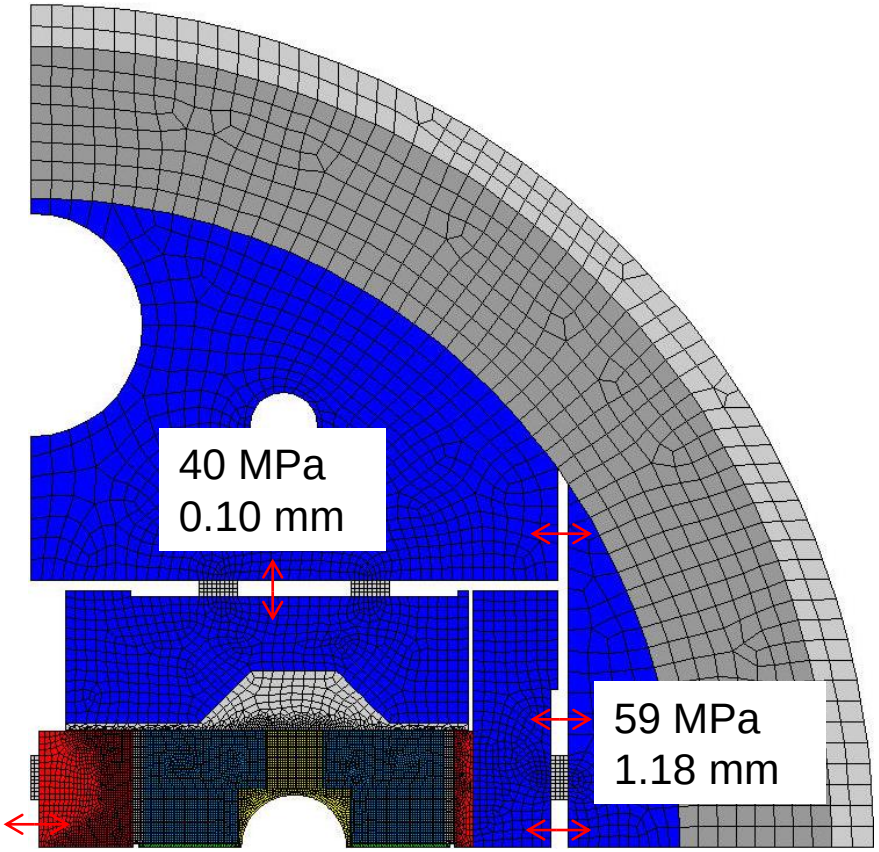

59 MPa
0.41 mm

Yoke

Al Shell

SS Shell

2D Mechanical Design – Coil-Pole contact

- Pre-load**: interference tuned**
- Operation at 16 T: **contact pressure >0**

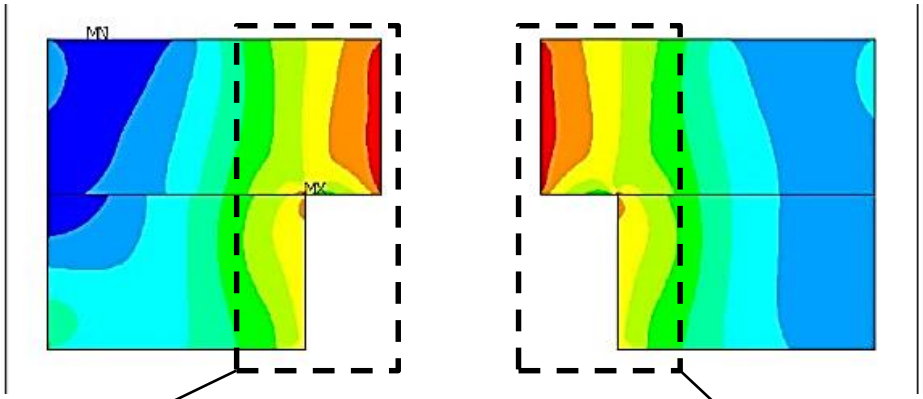

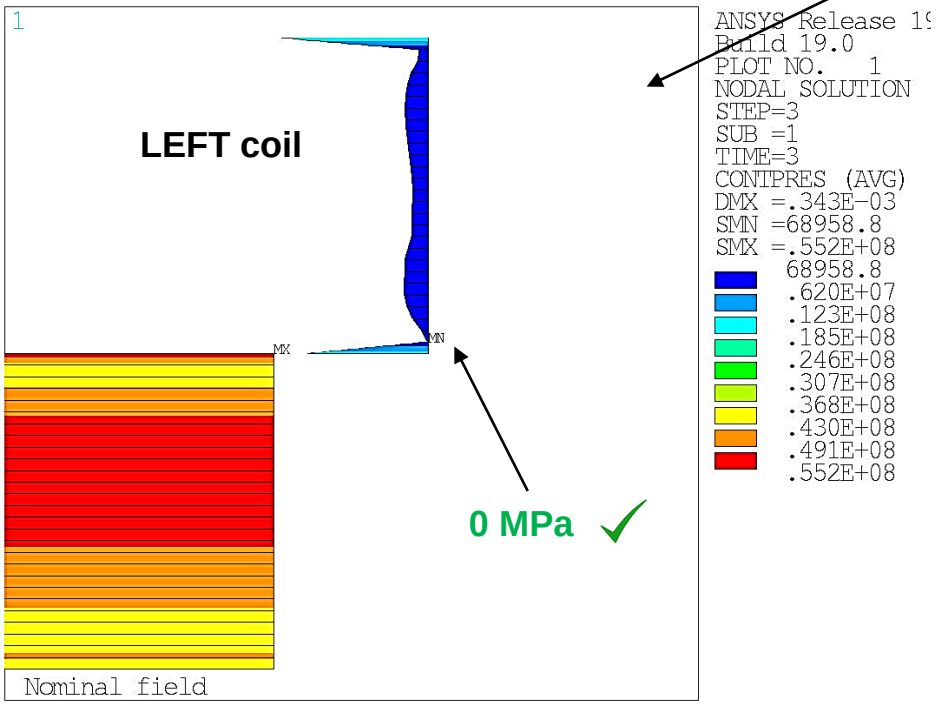

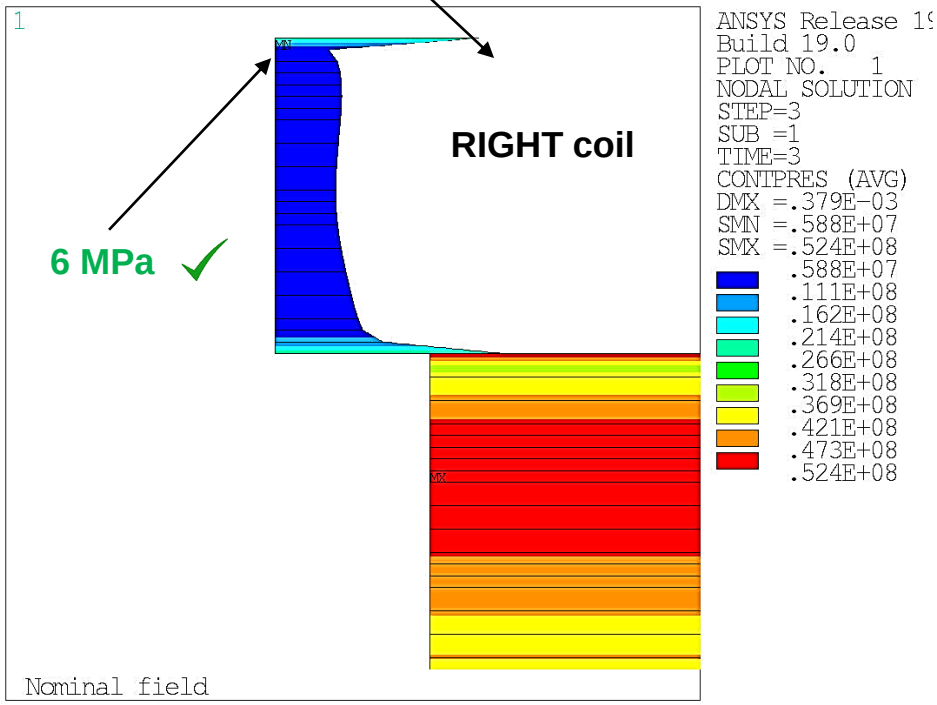

2D Mechanical Design – Coil Peak Stress

	Room-temperature pre-load	Cool-down to 1.9K	Operation at 16 T
σ_x	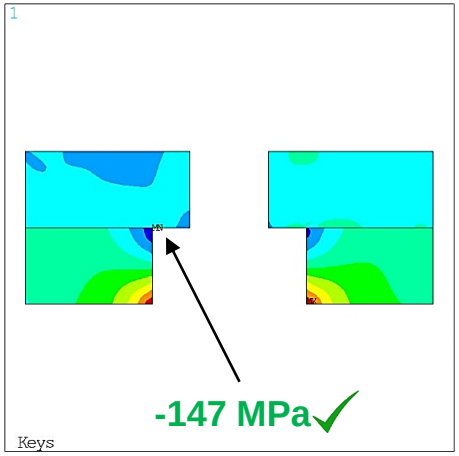	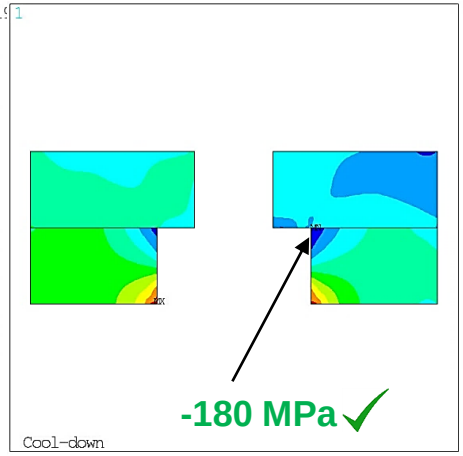	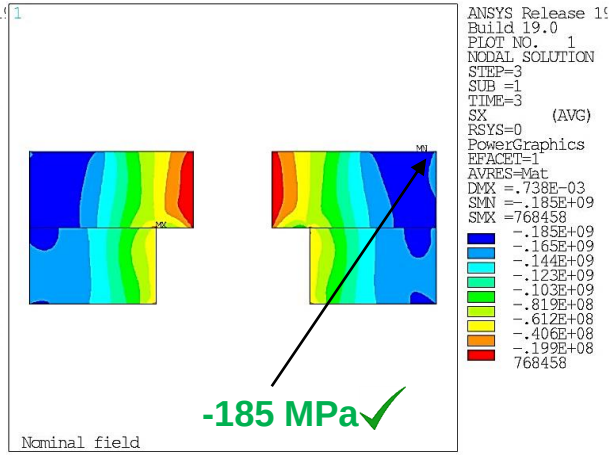
σ Von Mises	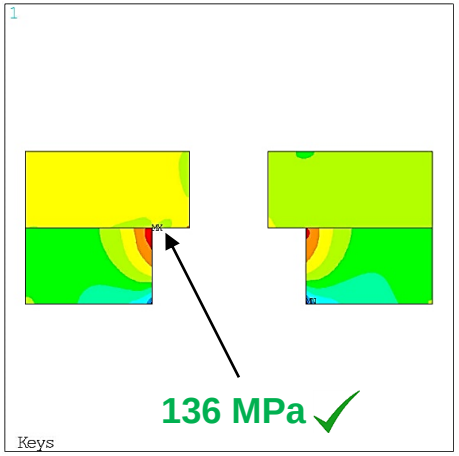	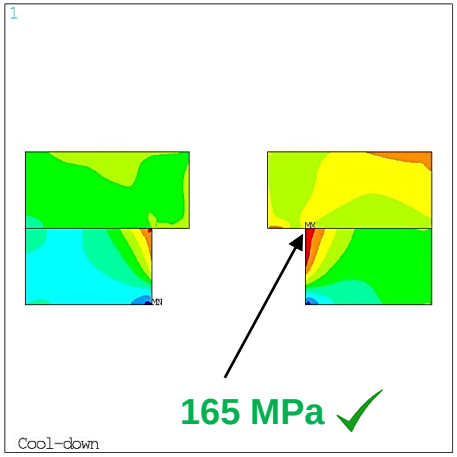	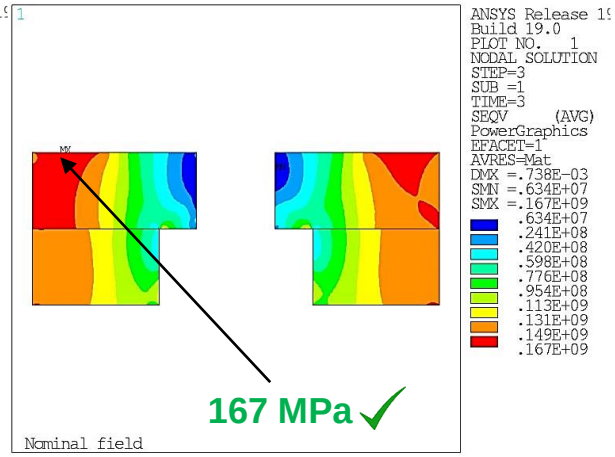
Criteria:	<150 MPa	<200 MPa	<200 MPa

2D Mechanical Design – Structure

	Room-temperature pre-load	Cool-down to 1.9K	Operation at 16 T
Ti Poles	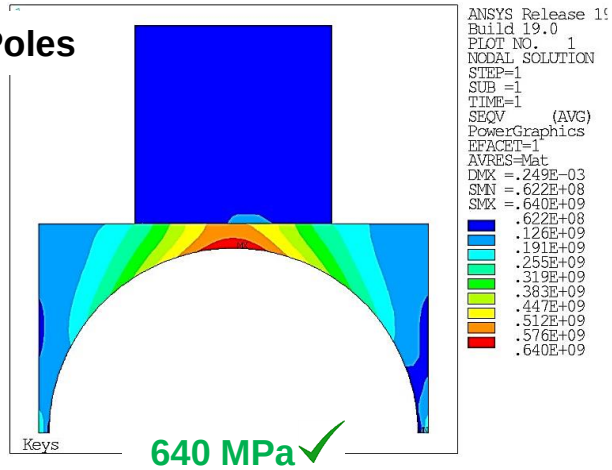	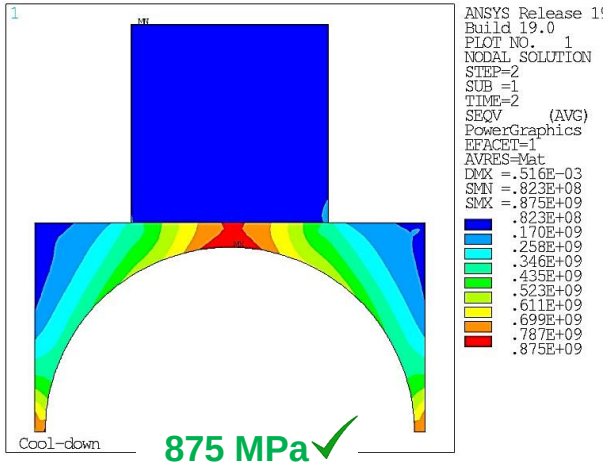	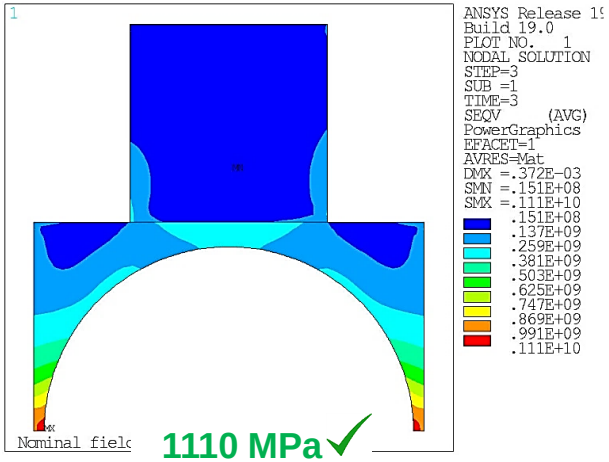
σ Von Mises	640 MPa ✓	875 MPa ✓	1110 MPa ✓
Criteria:	<800 MPa	<1650 MPa	<1650 MPa
Stainless steel Y-pusher	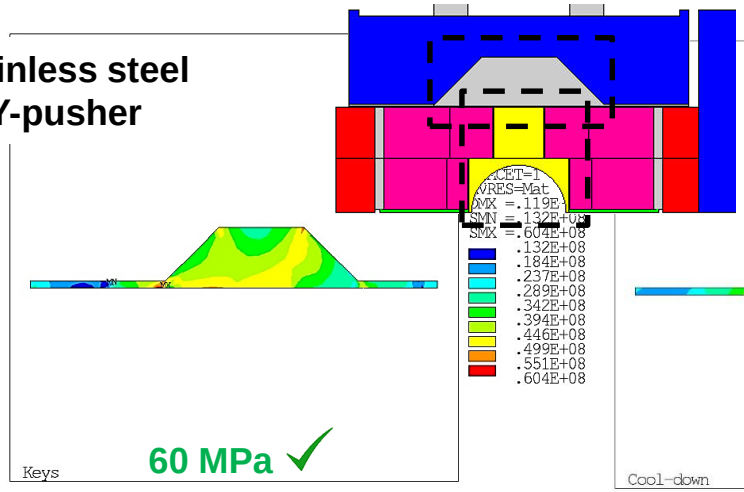	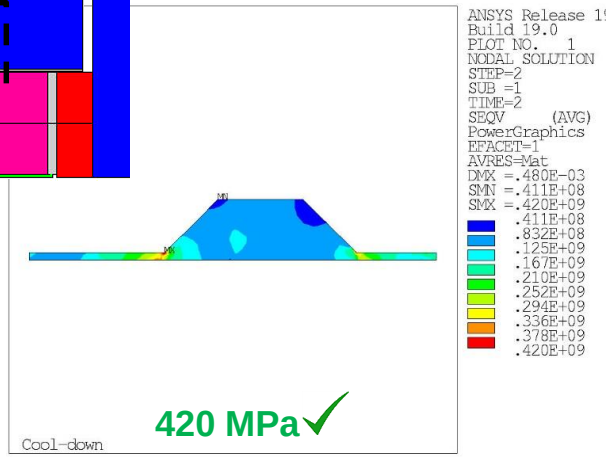	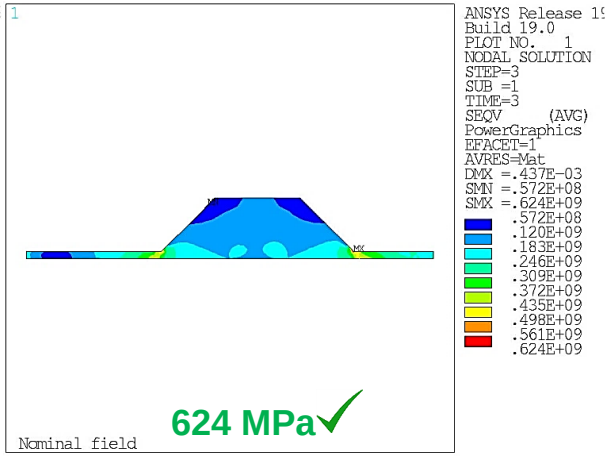
σ Von Mises	60 MPa ✓	420 MPa ✓	624 MPa ✓
Criteria:	<350 MPa	<1050 MPa	<1050 MPa

2D Mechanical Design – Structure

Room-temperature pre-load | **Cool-down to 1.9K** | **Operation at 16 T**

Al Shell

σ_θ

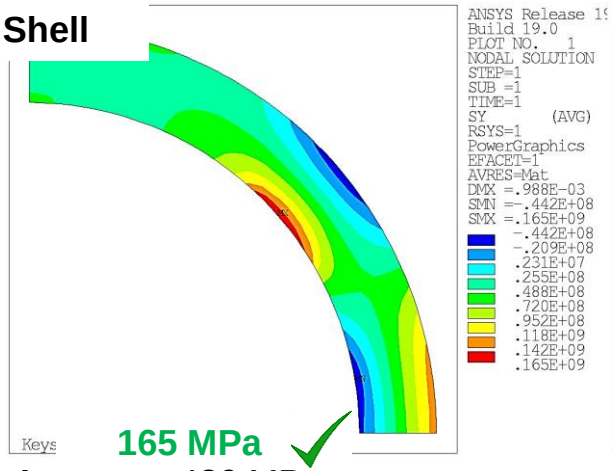

165 MPa ✓

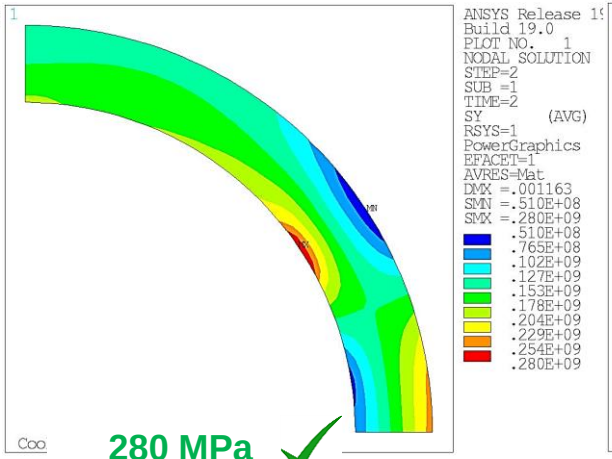

280 MPa ✓

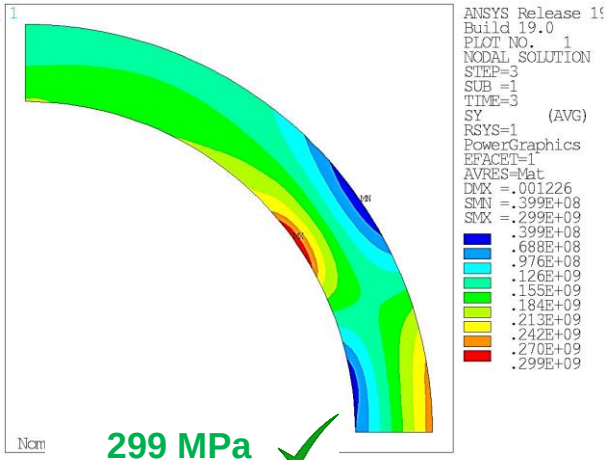

299 MPa ✓

Criteria: <480 MPa | <690 MPa | <690 MPa

Stainless steel shell

σ_θ

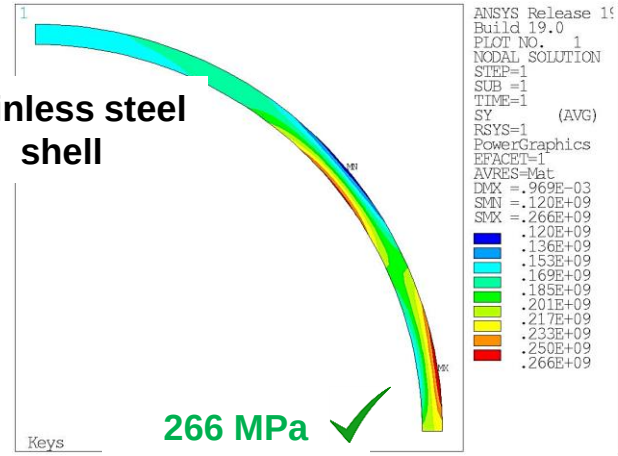

266 MPa ✓

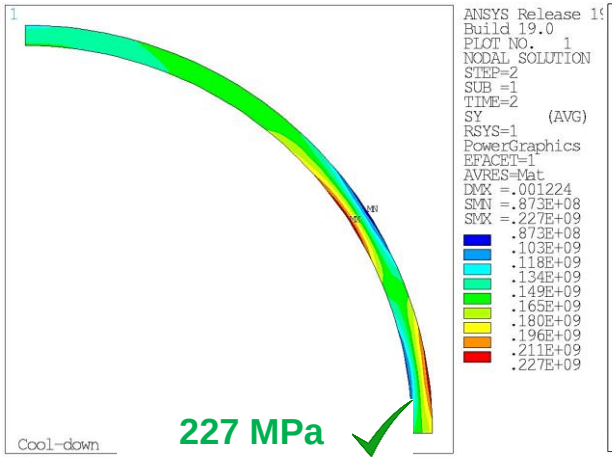

227 MPa ✓

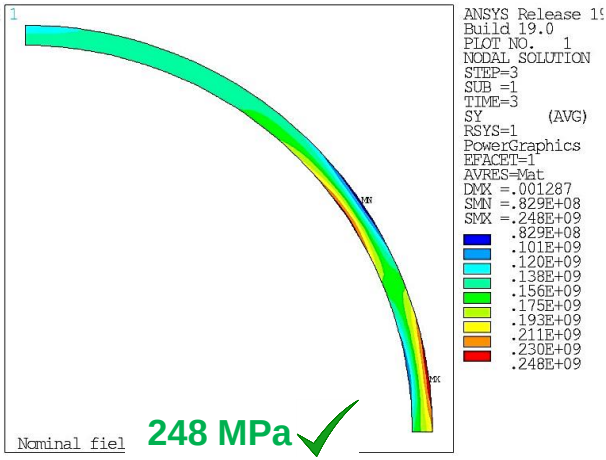

248 MPa ✓

Criteria: <350 MPa | <1050 MPa | <1050 MPa

2D Mechanical Design – Structure

Room-temperature pre-load | **Cool-down to 1.9K** | **Operation at 16 T**

Iron Y-pad

σ Von Mises

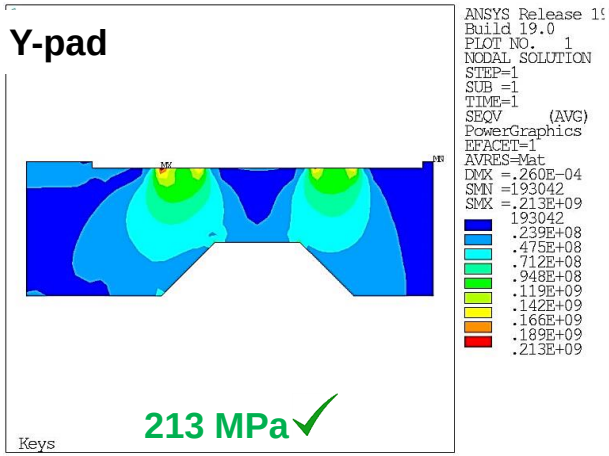

213 MPa ✓

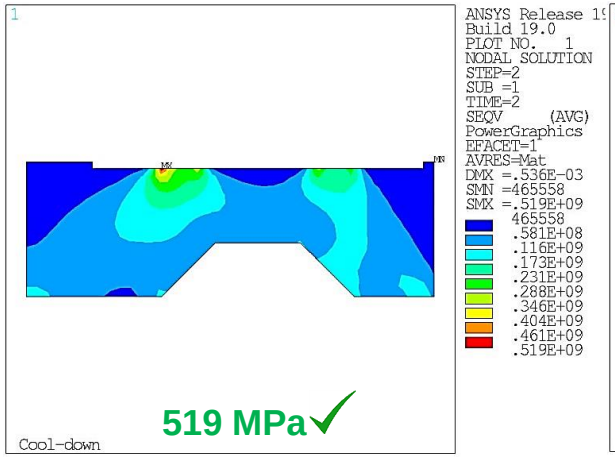

519 MPa ✓

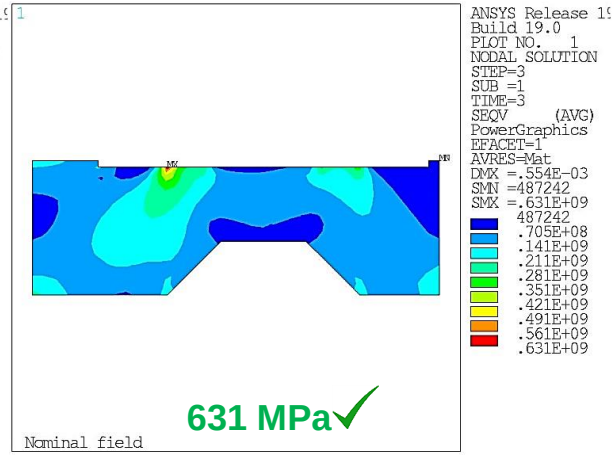

631 MPa ✓

Criteria: <230 MPa | <720 MPa | <720 MPa

Sigma I: pure tension

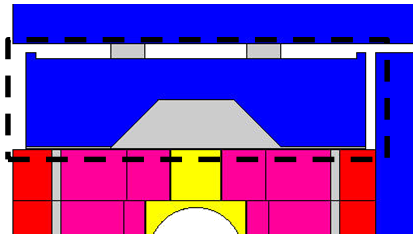

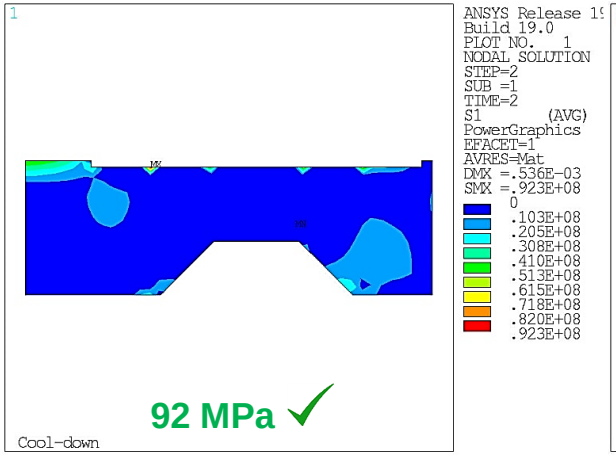

92 MPa ✓

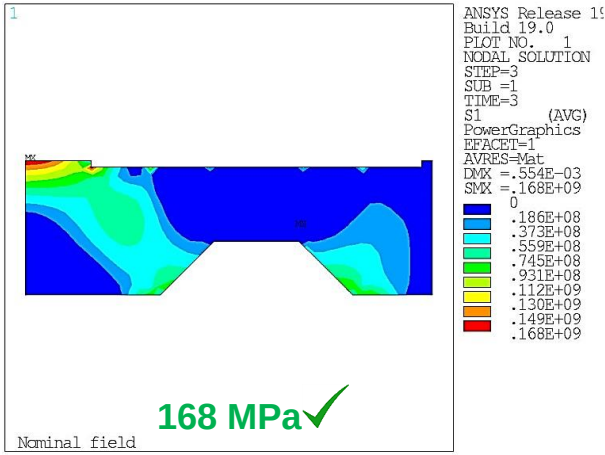

168 MPa ✓

<380 MPa | <380 MPa

2D Mechanical Design – Structure

Room-temperature pre-load | **Cool-down to 1.9K** | **Operation at 16 T**

Iron X-pad

σ Von Mises

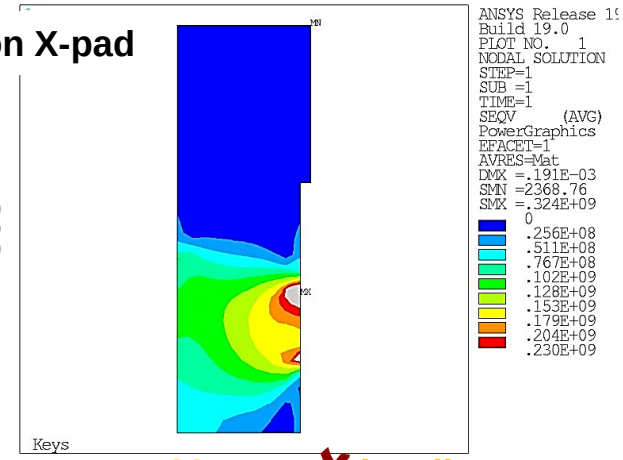

324 MPa locally

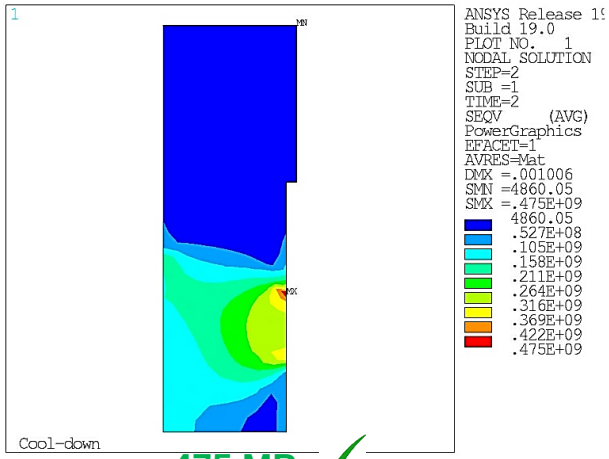

475 MPa

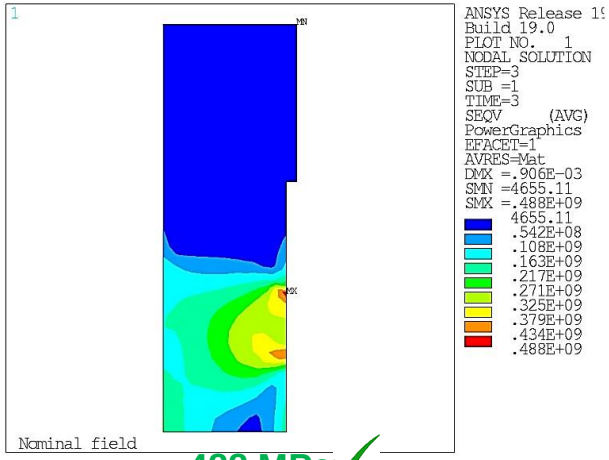

488 MPa

Criteria: <230 MPa | <720 MPa | <720 MPa

Sigma I: pure tension

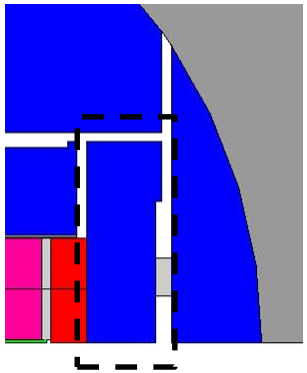

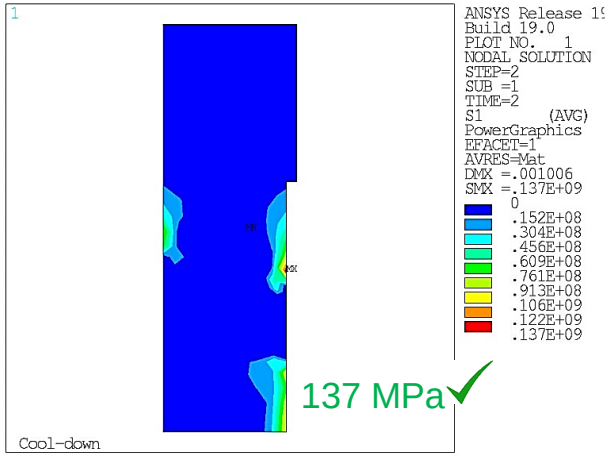

137 MPa

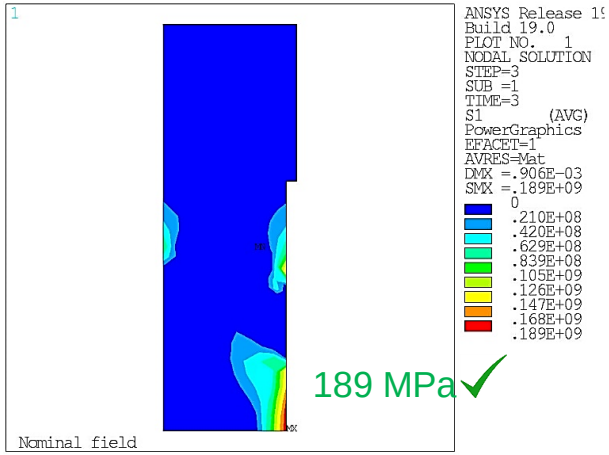

189 MPa

<380 MPa | <380 MPa

2D Mechanical Design – Structure

Room-temperature pre-load | **Cool-down to 1.9K** | **Operation at 16 T**

Iron Y-pad

σ Von Mises

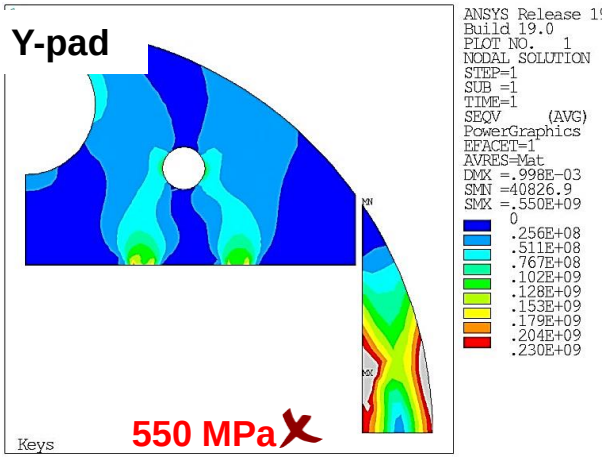

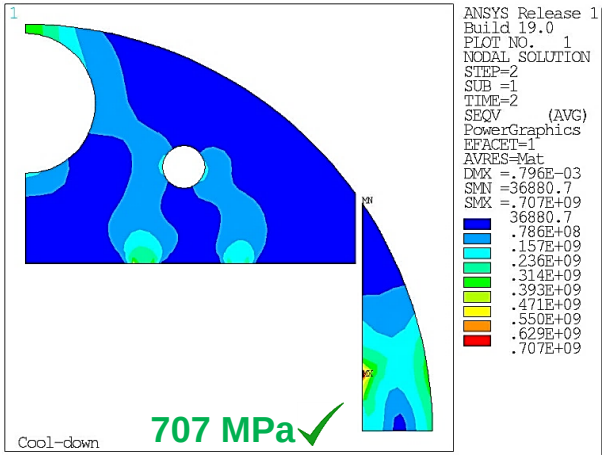

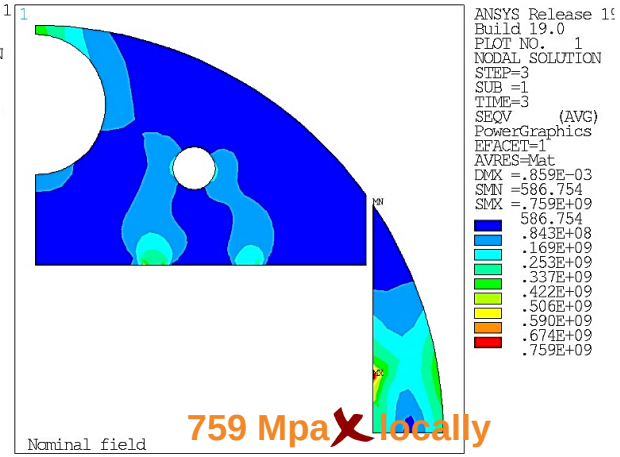

Criteria: <230 MPa | <720 MPa | <720 MPa

Sigma I: pure tension

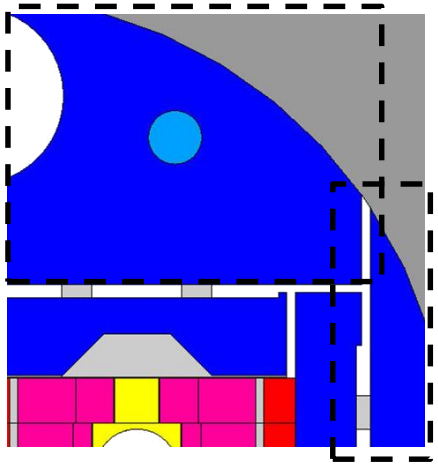

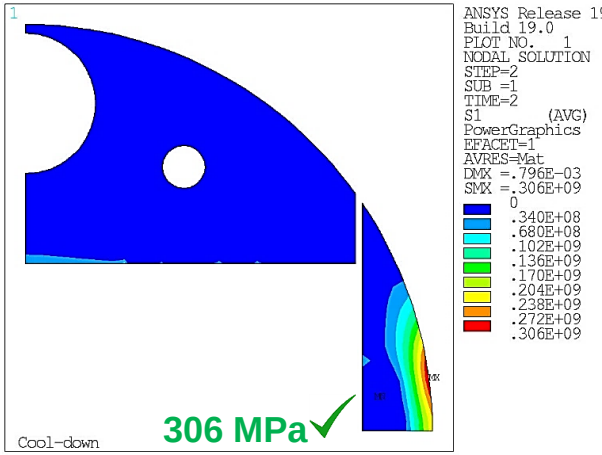

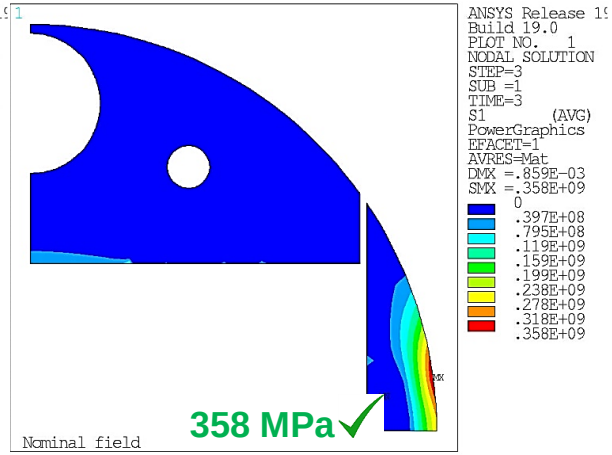

<380 MPa | <380 MPa

3D Mechanical Design - Preliminary

3D FEM running :

- to verify stress level in all components
- focusing in particular on the ends

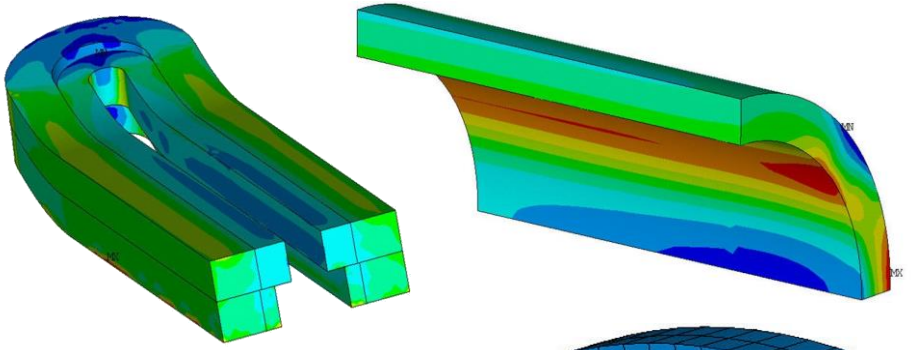

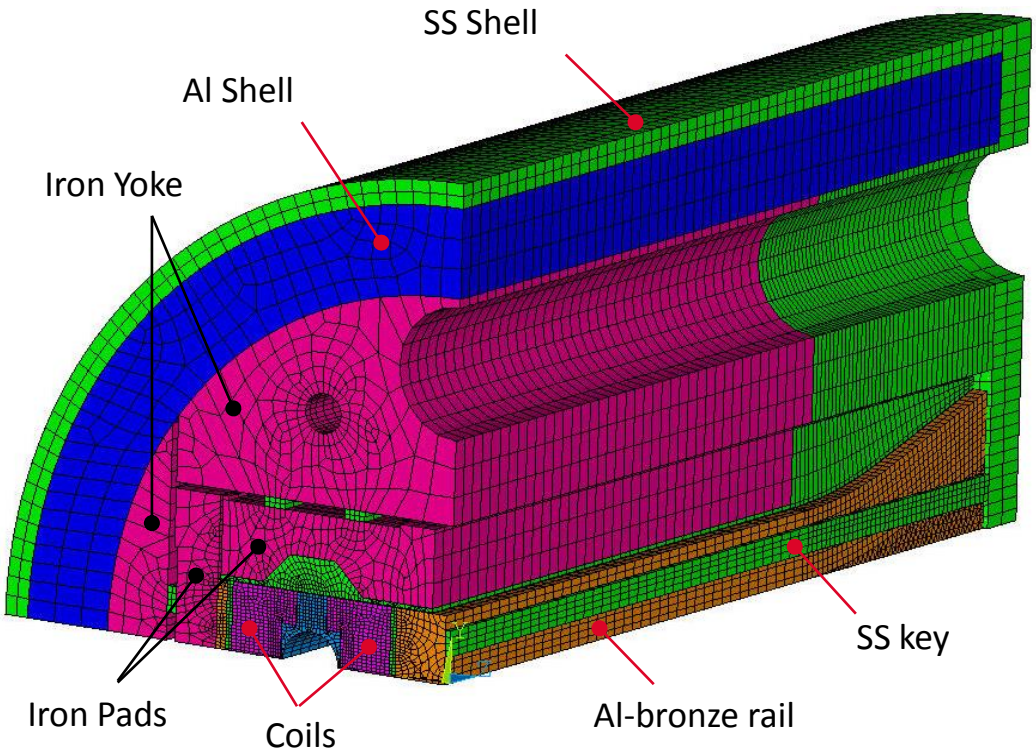

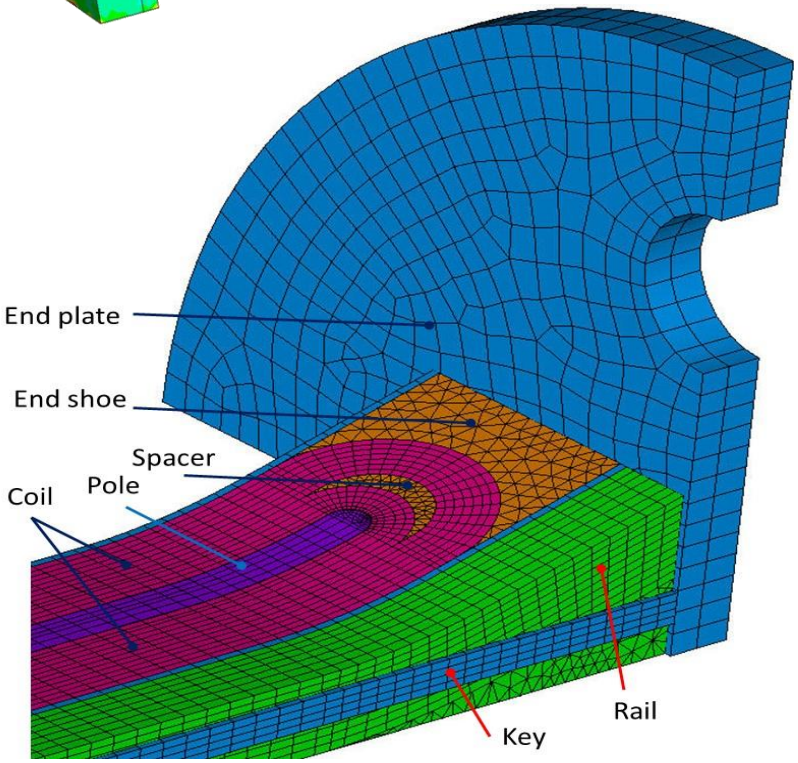

CONCLUSION

- 2d magnetic design:
  - **16 T at 14 %** of LL margin at 1.9 K
  - **b2 within +/- 15 units** at all currents
- Protection by CLIQ **or** quench heaters (conservative case is QH):
  - **$T_{Hotspot}$ = 320 K <350 K**
  - **V_{ground} = 900 V <1.2 kV**
- 3d magnetic design:
  - **Compact ends** (80 mm)
  - **Similar values for integrated harmonics**
  - **Additional margin in coil ends** (ΔB_{peak} > 0.7 T)
- 2d mechanical design:
  - **Coil stress < criteria**
  - **Iron X-Pad + Yoke: locally > criterion at warm**
  - **Other components: stress < criteria**
- Short model program ongoing

→ see « F2D2, the CEA Dipole Model for the FCC », E. Rochepault

DE LA RECHERCHE À L'INDUSTRIE

Backup Slides

CONDUCTOR PARAMETERS

PARAMETER	Values		Unit
Strand diameter	1.1	0.7	mm
Number of strands	21	34	adim
Unreacted width	12.47	12.47	mm
Unreacted thickness	1.94	1.23	mm
Reacted width	12.6	12.6	mm
Reacted thickness	2.00	1.27	mm
Copper/non-Copper ratio	0.8	2.0	adim
Insulation thickness	0.15	0.15	mm
Bare cable compaction	11.8	12.0	%
Packing factor	85.4	88.2	%
Transposition pitch	93	93	mm

C. Lorin,
Oct 17 review

J. Fleiter: Rutherford cable design approach and experience at CERN (here)

Parameter	Unit	**11 T RRP for LS2**	**11 T PIT for LS2**	**MQXF (PIT and RRP)**	**FRESCA2**	**ERMC**	**SMC**
Number of strands	(-)	40	40	40	40	40	18
Strands diameter	mm	0.70	0.70	0.85	1.0	1.0	1.0
Cable bare width	mm	14.70	14.70	18.15	20.9	20.9	10
Cable bare thickness	mm	1.250	1.250	1.525	1.82	1.82	1.81
Keystone angle	**°**	**0.79**	**0.50**	**0.40**	**0.0**	**0.0**	**0.0**
Thin edge compaction*	**%**	**17.95**	**15.3**	**14.02**	**9.0**	**9.0**	**9.5**
Thick edge compaction*	%	3.48	6.13	6.57			
Transposition pitch	mm	100	100	109	120	120	63
SS Core width (thickness)	mm		12 (0.0025)		NO	14 (0.0025)	NO

3D magnetic design

- Assumptions:
  - Return ends – 1000 mm straight section
  - Hardway bend : Rmin = 450 mm in upper layer (w = 12.6 mm)
    - Strain 13.8 mm/m (HD2: 30.6 mm/m HD3: 12.4 mm/m Fresca2: 15.3 mm/m)
  - Coil-to-aperture y-direction: 5 mm
  - Double pancake end

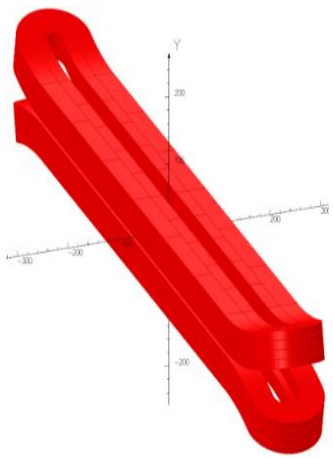

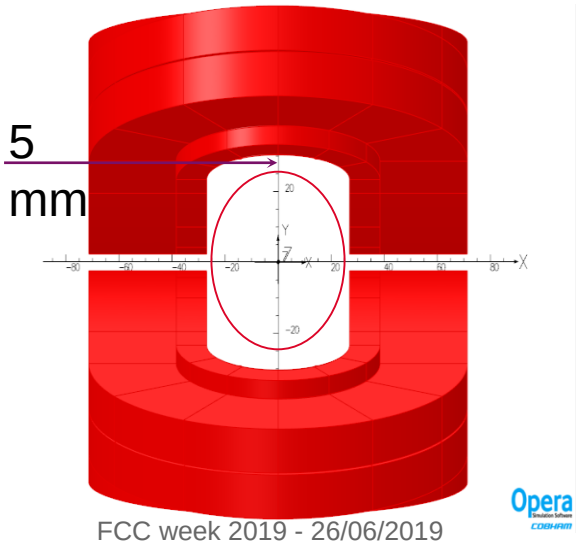

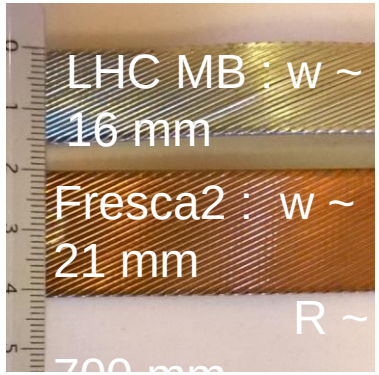

3D HARMONICS

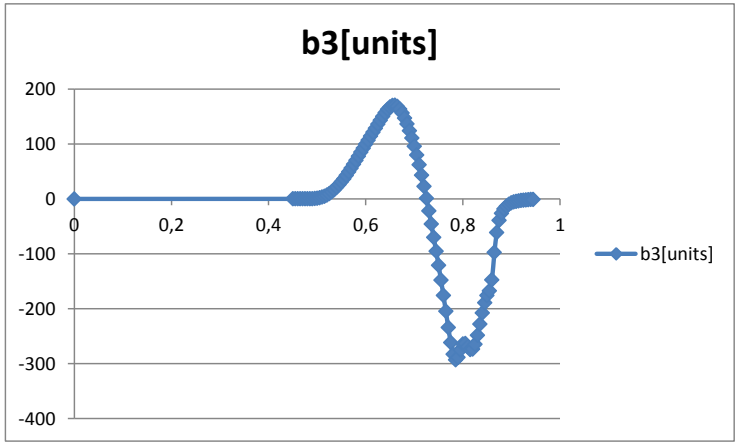

$$Ib_n = \frac{\int B_n(z)dz}{\int B_1(z)dz} = \frac{\int B_n(z)dz}{L_{mag}.B_{ref}} = \frac{\int b_n(z)dz}{L_{mag}}$$

$$Ib_{n,short} = \frac{\int_{short} b_n(z)dz}{L_{mag,short}}$$

$$Ib_n = \frac{\int_{short} b_n(z)dz + b_n(0).(L_{mag} - L_{mag,short})}{L_{mag}}$$

$$Ib_n = \frac{Ib_{n,short}.L_{mag,short} + b_n(0).(L_{mag} - L_{mag,short})}{L_{mag}}$$

<u>Ex</u>: -10 units on a short length

Ib_3 = [-10 units x 0.68x2 -0.8 units x (14.069-0.68x2)] / 14.069

= **-1.69 units**

2D MECHANICAL DESIGNS

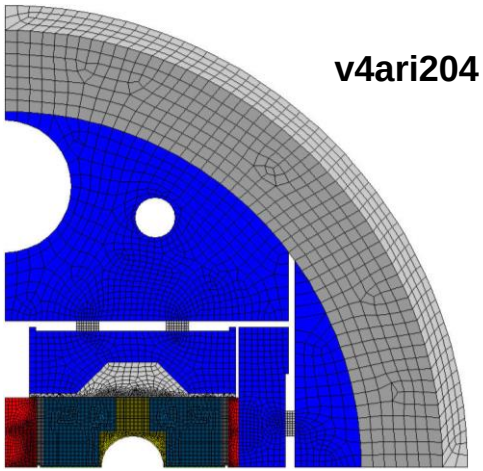

Interbeam distance = 204 mm
$Ø_{ext}$ iron yoke = 570 mm
Total $Ø_{ext}$ = 740 mm
65 + 20 mm thick shells
1510 µm ←

	σ_X max	σ Von Mises max
Keys + SS shell	-135	123
Cool-down	-184	170
Energization 16 T	**-214**	186

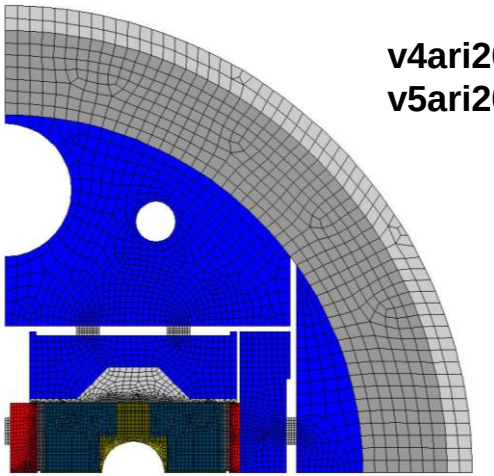

Interbeam distance = 204 mm
$Ø_{ext}$ iron yoke = 570 mm
Total $Ø_{ext}$ = 744 mm
67 + 20 mm thick shells
→ 2 x 720 µm ←

	σ_X max	σ Von Mises max
Keys + SS shell	-148	137
Cool-down	-181	160
Energization 16 T	-199	177

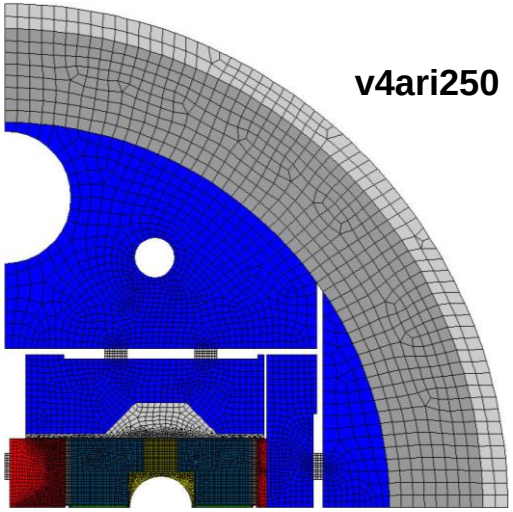

Interbeam distance = 250 mm
$Ø_{ext}$ iron yoke = 616 mm
Total $Ø_{ext}$ = 800 mm
72 + 20 mm thick shells
→ 412 µm + 1185 µm ←

	σ_X max	σ Von Mises max
Keys + SS shell	-147	136
Cool-down	-180	165
Energization 16 T	-185	167

Material properties

(Davide 3rd FCC week)

Coil maximum stress

- @ 4.2 K: 200 MPa
- @ 300 K: 150 MPa

Material	$R_{p\ 0.2}$ [MPa]	
	293 K	4.3 K
Al 7075	480	690
SS 316 LN	350	1050
NITRONIC 40	350	1240
Ferromagnetic iron	230	720*
Ti 6Al 4V	800	1650

Material	E [GPa]		pr	$(L_{4.3K}-L_{293K})/L_{293K}$
	293 K	4.3 K	293K/4.3K	293 K -> 4.3K
Coil	EX = 25 EY = 30 GXY = 21	EX = 27.5 EY = 33 GXY = 21	0.3	X = 3.36e-3 Y = 3.08e-3
StSt	193	210	0.28	2.84e-3
Iron	213	224	0.28	1.97e-3
Aluminum	70	79	0.34	4.2e-3
Titanium	115	126.5	0.3	1.74e-3
Nitronic 40	210	225	0.28	2.6e-3

*Ferromagnetic iron @ 4.2 K stress < 380 MPa in tension (1st principal stress)