Leaning Science with Machine Learning: Opening the Pandora Box

Shirley Ho
CMU/Berkeley-> Flatiron Institute/Princeton University

Siyu He (Flatiron/CMU), Yin Li (Berkeley), Yu Feng (Berkeley),
Siamak Ravanbakhsh, Barnabas Poczos, Elena Giusarma,
Emmanuel Schaan, Simone Ferraro, Junier Oliver, Jeff Schneider
Layne Price, Sebastian Fromenteau, Sunny Vagnozzi,
Katie Freese, Kam-Biu Luk

Artificial Intelligence with CERN and SKA
Alan Turing Institute, 2018

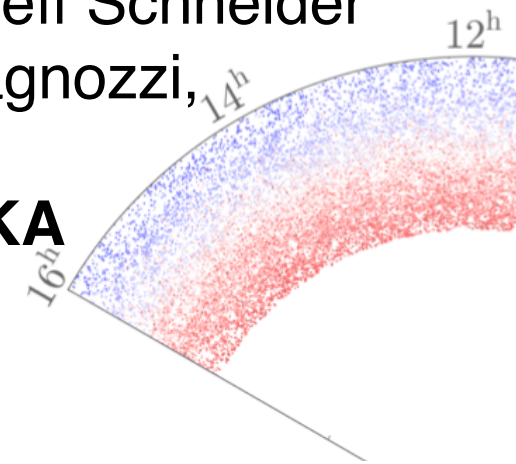

Traditional Cosmology analysis

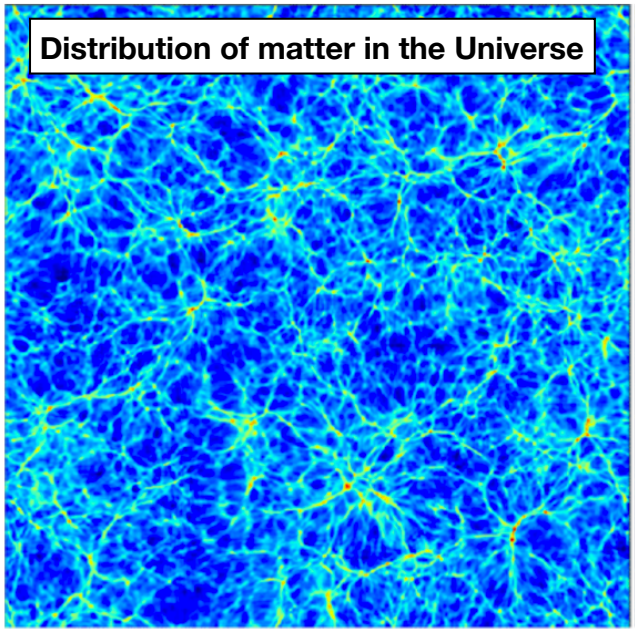

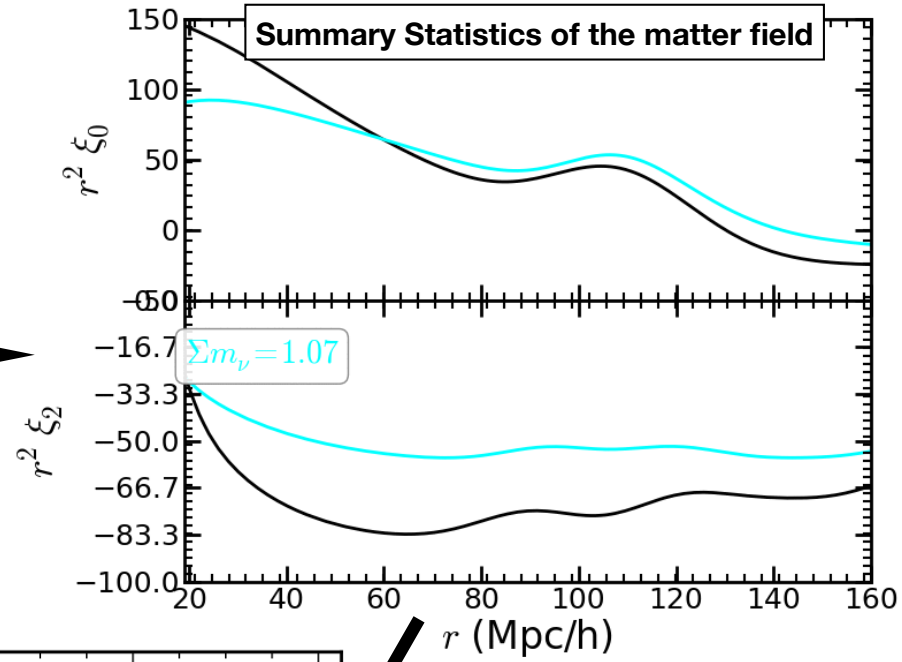

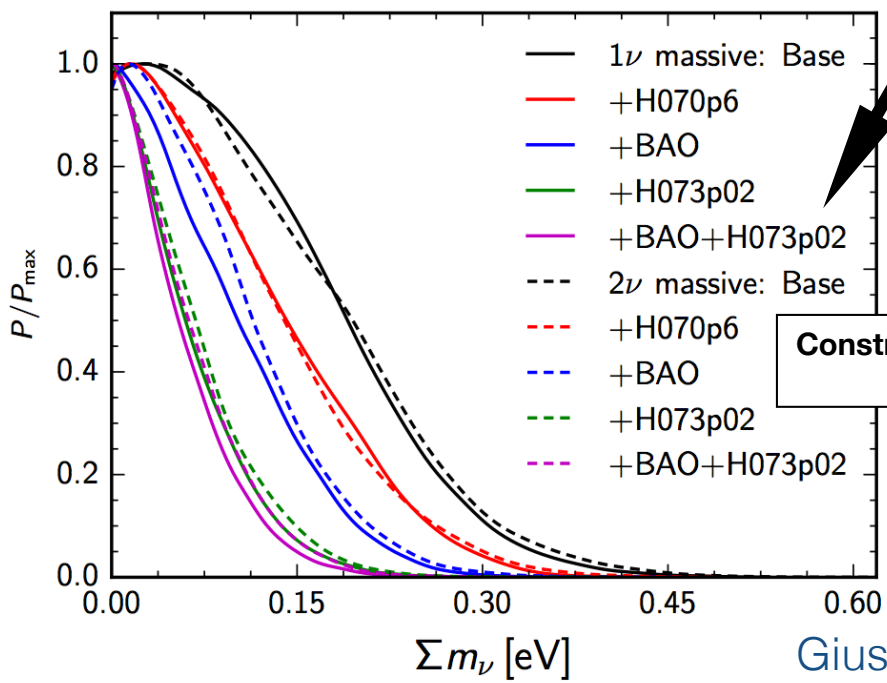

Constraints on important parameters such as neutrino masses

Giusarma, Gerbino, **Ho** et al. 2016

Standard Cosmological Analysis: Use summary statistics to constrain physical parameters such as neutrino masses

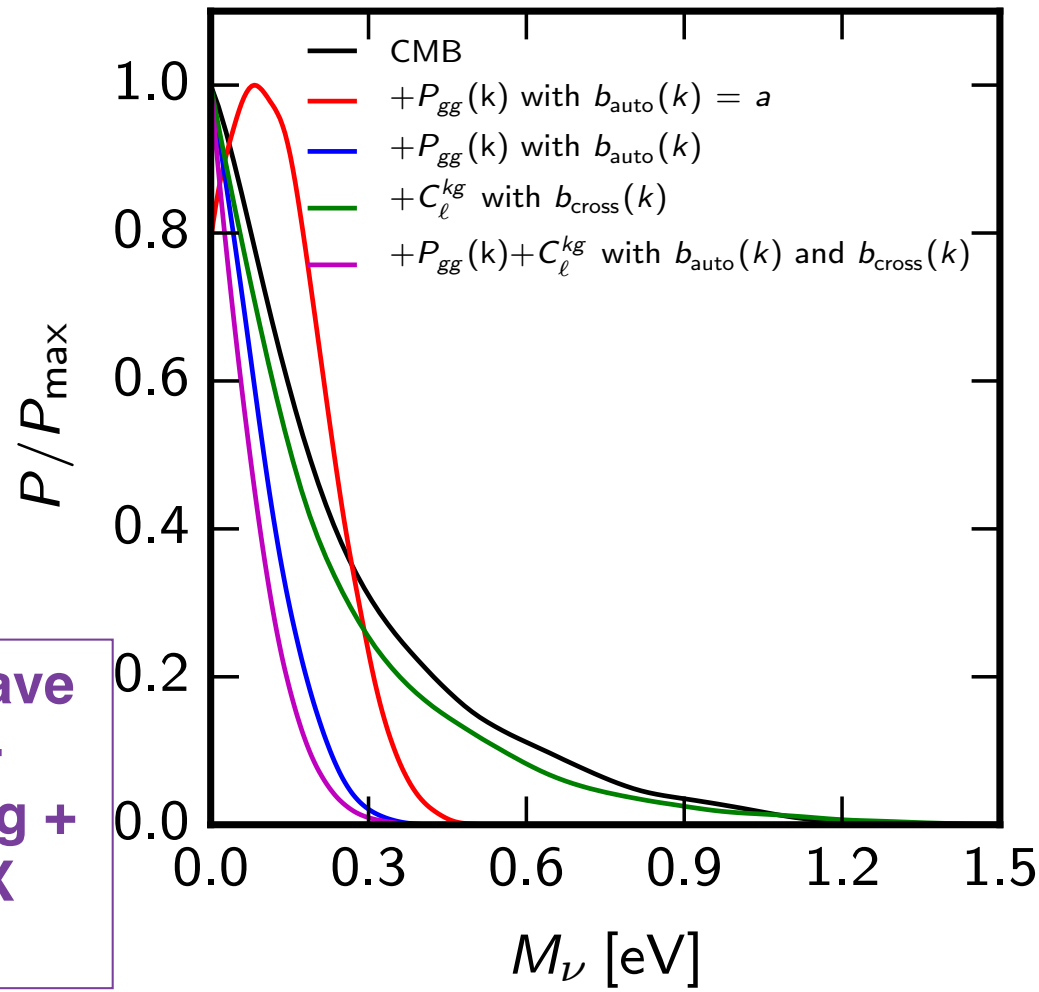

Cosmic Microwave Background+ galaxy clustering + cmb lensing X galaxy

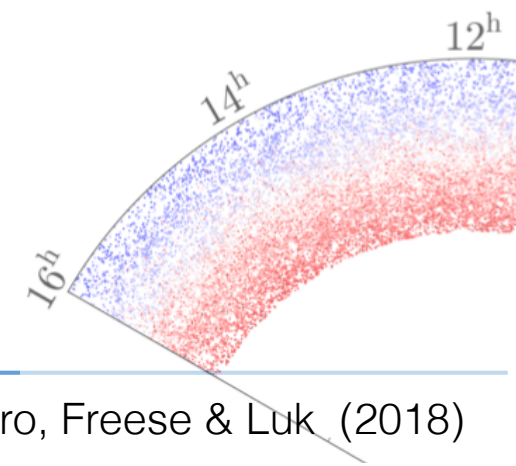

Giusarma, Vagnozzi, **Ho**, Ferraro, Freese & Luk (2018)

Can we use Machine Learning to extract more information from the following datasets?

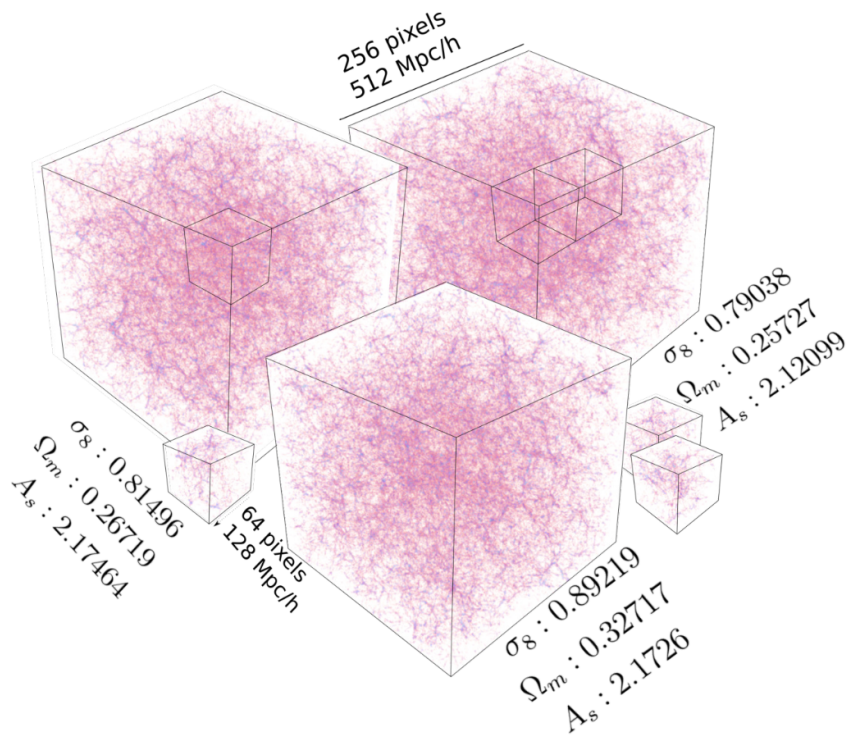

Figure 1. Dark matter distribution in three cubes produced using different sets of parameters. Each cube is divided into small sub-cubes for training and prediction. Note that although cubes in this figure are produced using very different cosmological parameters in our constrained sampled set, the effect is not visually discernible.

Ravanbakhsh, Oliver, Price, **Ho**, Schendier & Poczos
International Conference of Machine Learning 2016

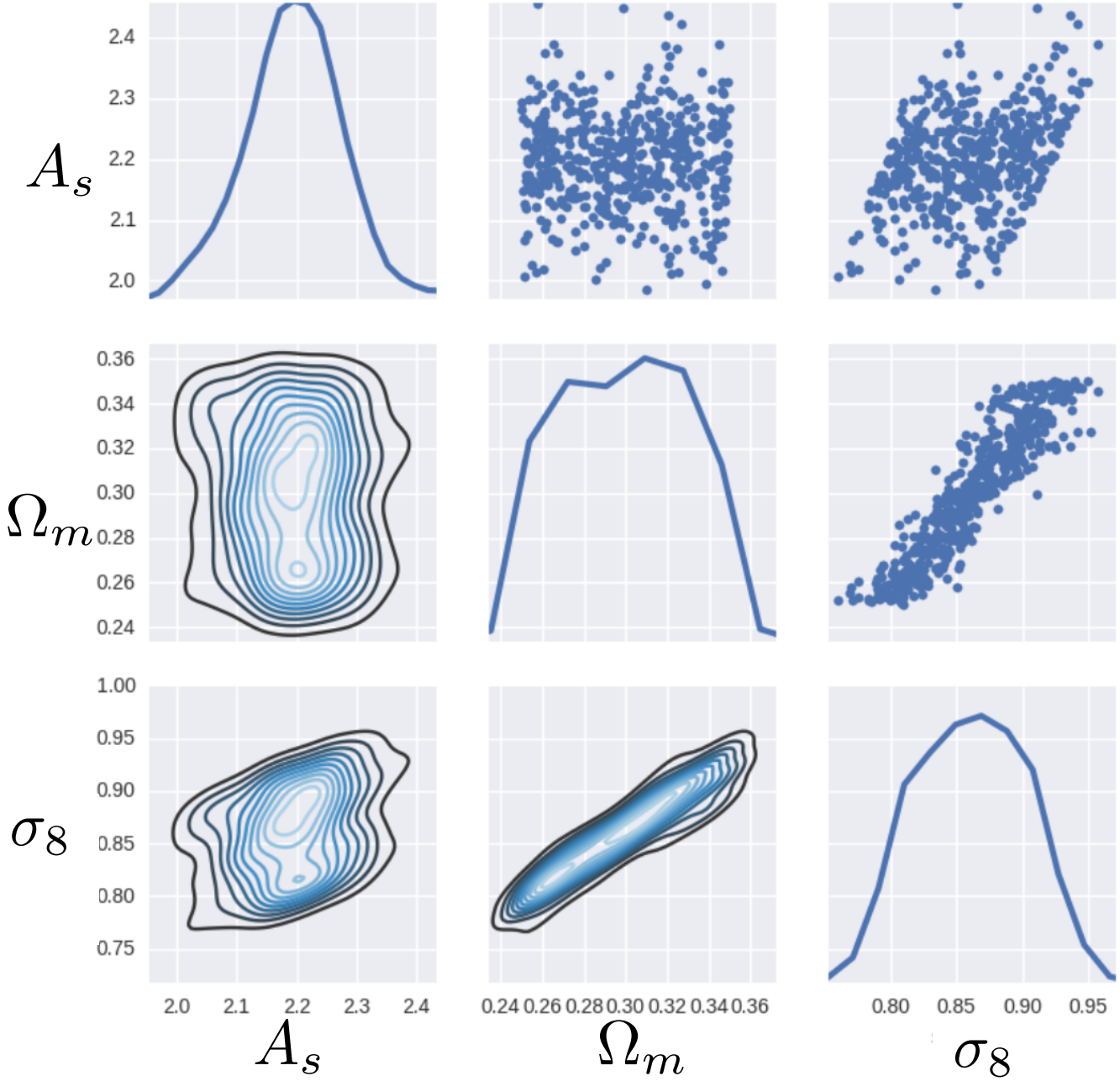

Ravanbakhsh, Oliver, Price, **Ho**, Schendier & Poczos **ICML** 2016

Deep learning algorithm: Convolutional Neural Net (Conv-Net)

Ravanbakhsh, Oliver, Price, **Ho**, Schendier & Poczos **ICML** 2016

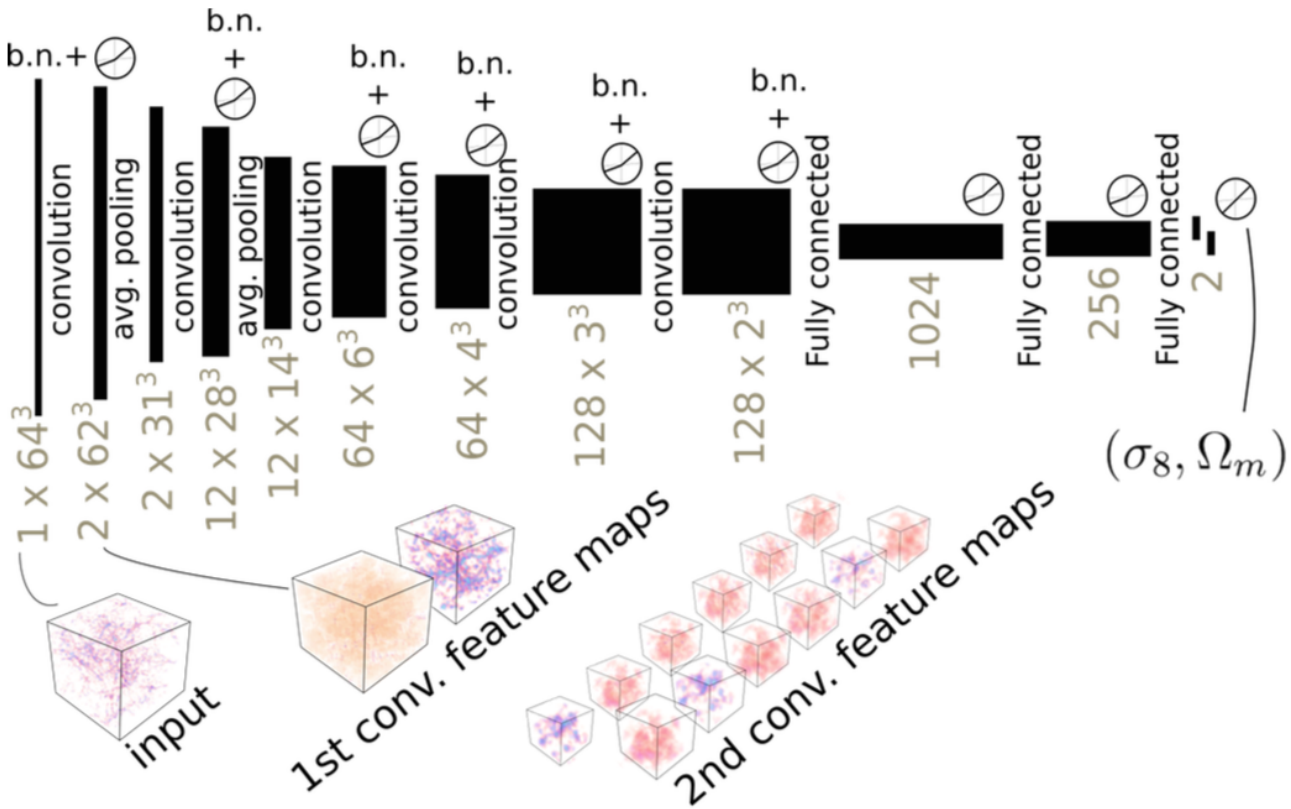

Figure 6. The architecture of our 3D conv-net. The model has six convolutional and 3 fully connected layers. The first two convolutional layers are followed by average pooling. All layers, except the final layer, use leaky rectified linear units, and all the convolutional layers use batch-normalization (b.n.).

Deep learning algorithm: Convolutional Neural Net (Conv-Net)

- Convolutional Neural Net performs non-linear convolution on the input volume of pixels (the dataset in this case) and
- output a volume of scores (of different dimension).
- Trying to learn underlying **mapping** between input and output
- The scores in this case are the cosmological parameters.
- The non-linear convolution are trained with gradient descent so that the output scores are consistent with the training sample

Ravanbakhsh, Oliver, Price, **Ho**, Schendier & Poczos **ICML** 2016

Training, Validation and Testing with O(100)s of simulations

Ravanbakhsh, Oliver, Price, **Ho**, Schendier & Poczos **ICML** 2016

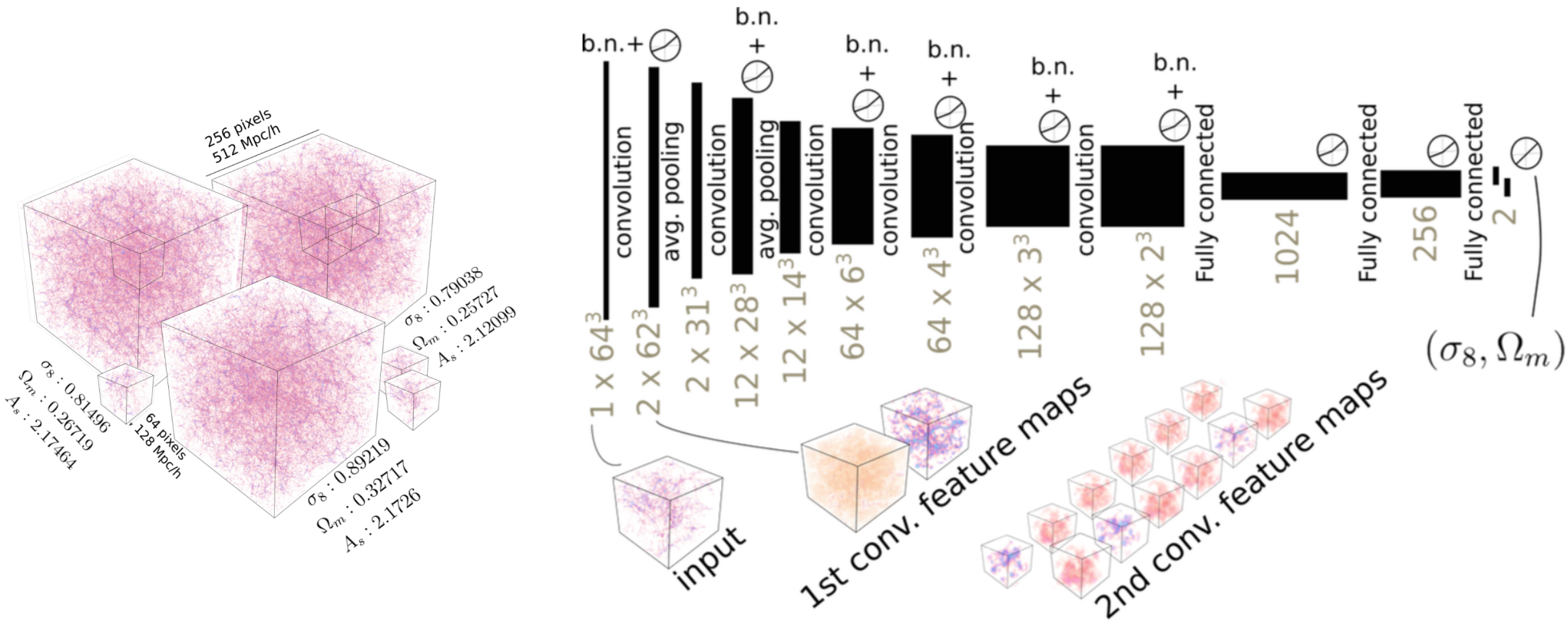

Training: Input N-body simulations with known cosmological parameters to train the ConvNet
Validation: Input next set of simulations with known cosmological parameters to fine tune the hidden parameters in ConvNet (eg. Number of layers)
Test: Input N-body simulations with unknown cosmological parameters and predict with ConvNet

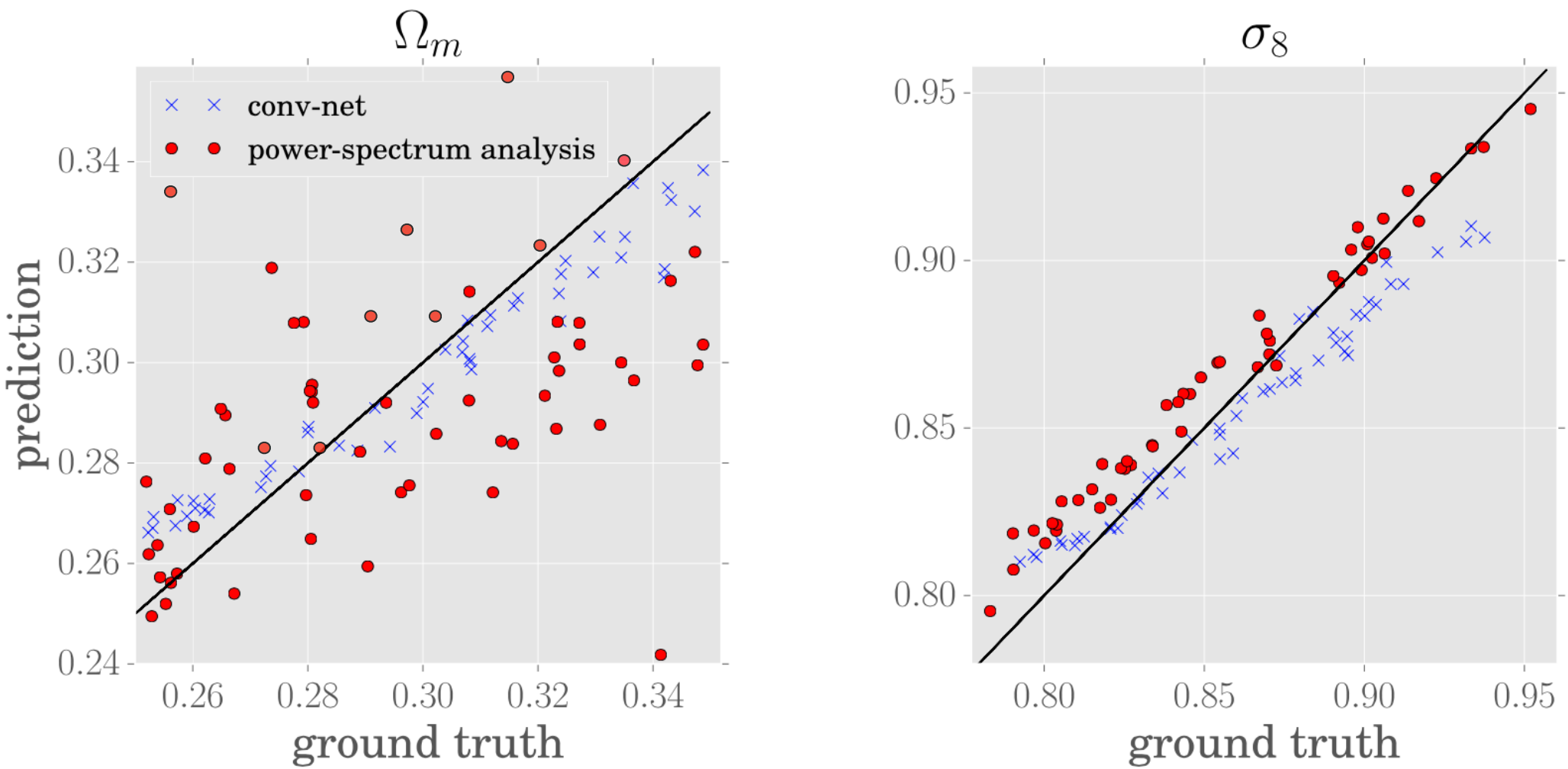

Figure 2. Prediction and ground truth of Ω_m and σ_8 using 3D conv-net and analysis of the power-spectrum on 50 test cube instances.

Ravanbakhsh, Oliver, Price, **Ho**, Schendier & Poczos **ICML** 2016

Now as scientists, we have lots of questions…

- As an astrophysicist, do we understand where the extra information is coming in from?
- Can we get a correct estimate of the error ?
- Can we interpret the model learnt in Machine Learning?
- Can we compress the model learnt into physical laws?
- More provocatively: Can machine learning interpolate and generalize from data just like human and find new physical laws?

Now as scientists, we have lots of questions…

- As an astrophysicist, do we understand where the extra information is coming in from?
- Can we get a correct estimate of the error ?
- **Can we interpret the model learnt in Machine Learning?**
- Can we compress the model learnt into physical laws?
- More provocatively: Can machine learning interpolate and generalize from data just like human and find new physical laws?

Can we interpret what the model is learning?

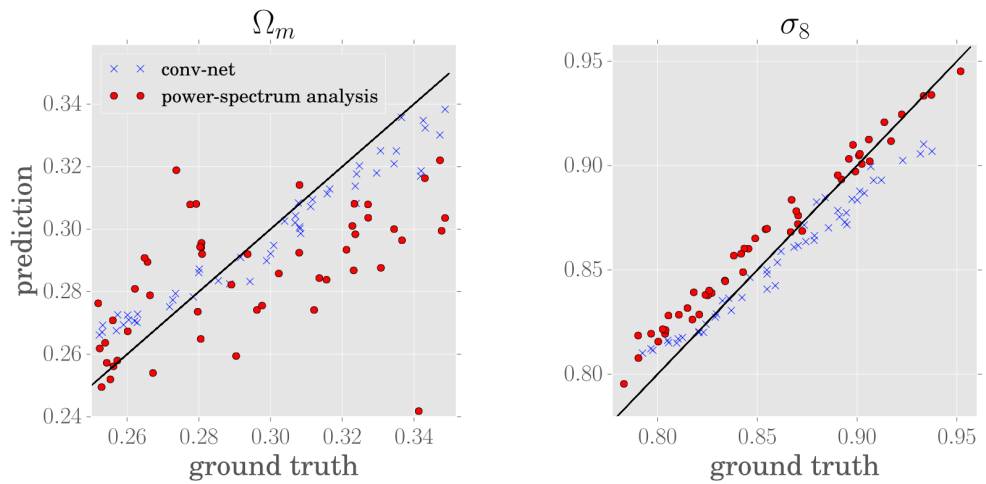

- We think the difference between the traditional method and what machine learning is doing may come from the difference between what we can model analytically and what is the full information.

- So we made the following experiment, which is geared to learn the difference between **analytical modeling** and **the full information** in the density field.

Analytical physics (2nd order Lagrangian Perturbation Theory) vs Computer Simulations (N-body)

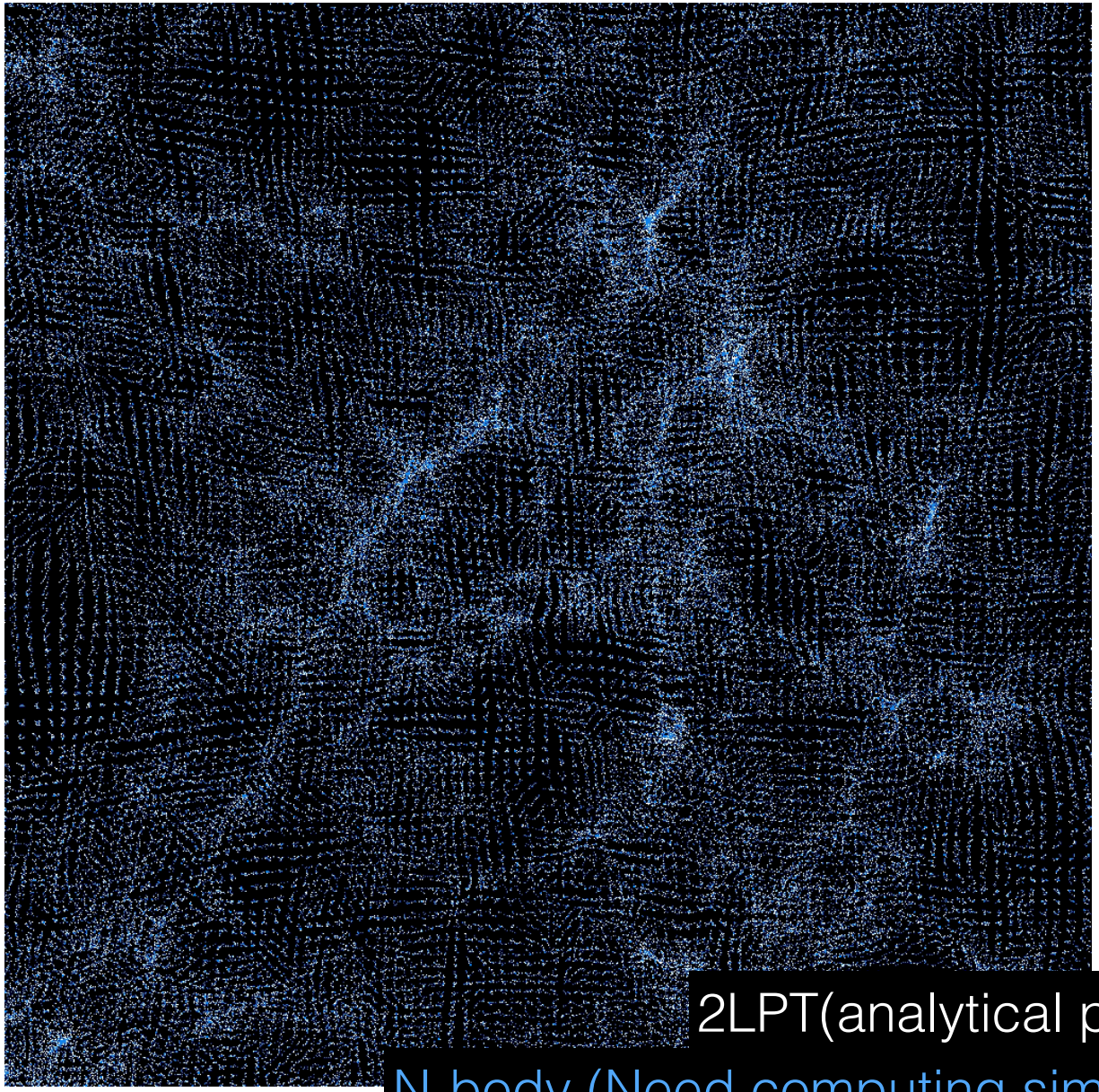

2LPT(analytical physics): White

N-body (Need computing simulations): Blue

Movie Credit: Andrea Klein, Junier Oliver, Hy Trac

Predicting from Analytical approximated (Zeldovich Approximation) fields to numerically simulated (FastPM) fields

Training

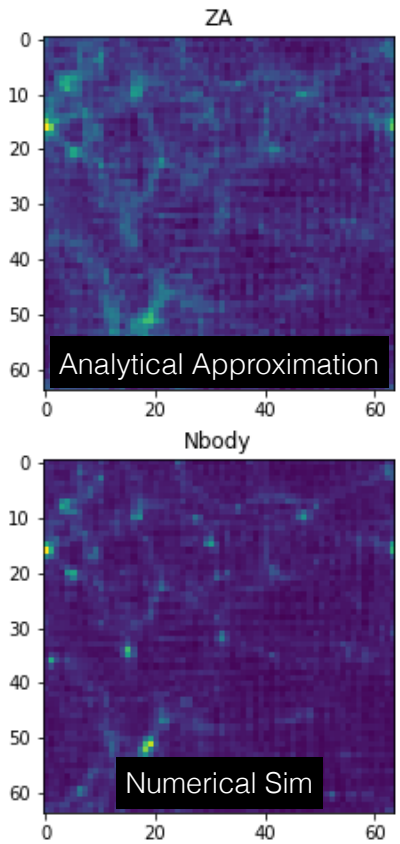

10,000 pairs of
[Analytical, Sim] boxes
For training

Machine learning [UNET]

Slight variant to Residual NN

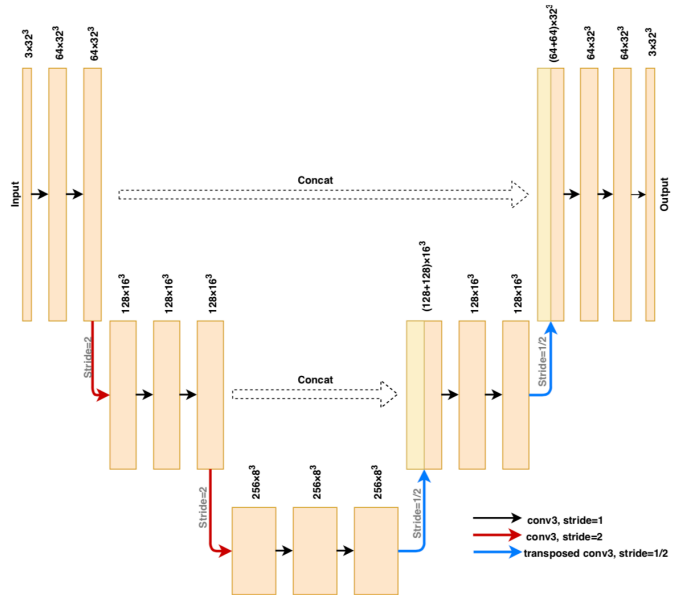

Preliminary results from: Siyu He, Yin Li, Yu Feng, **S.H.**, Siamak Ravanbaksh, Barnabas Poczos

Predicting from Analytical approximated (Zeldovich approximation) fields to numerically simulated (FastPM) fields

Machine learning [UNET]

Slight variant to Residual NN

Input

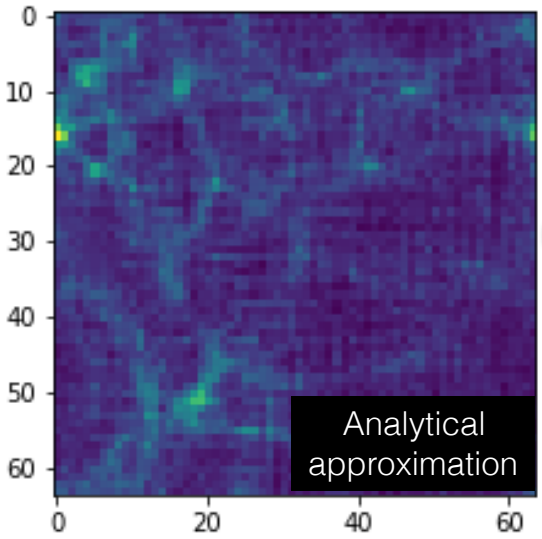

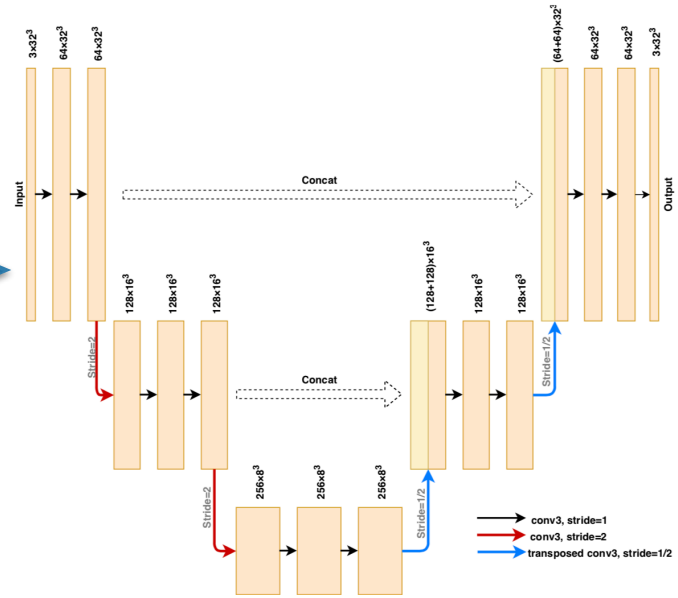

Prediction

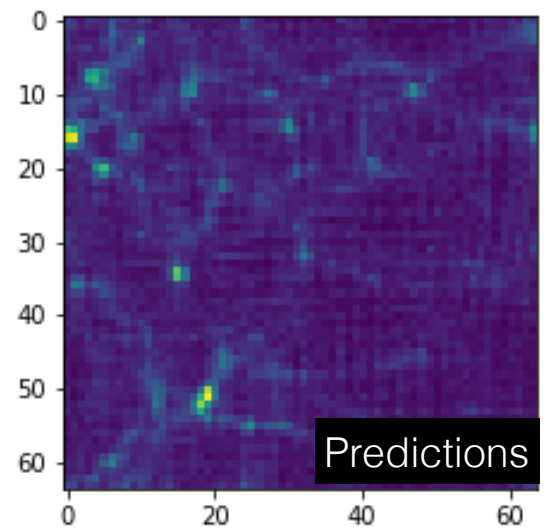

Preliminary results from: Siyu He, Yin Li, Yu Feng, **S.H.**, Siamak Ravanbaksh, Barnabas Poczos

Truth/numerical simulations

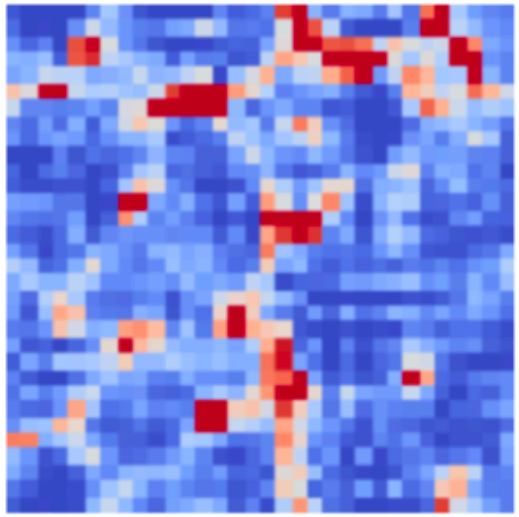

Best analytical

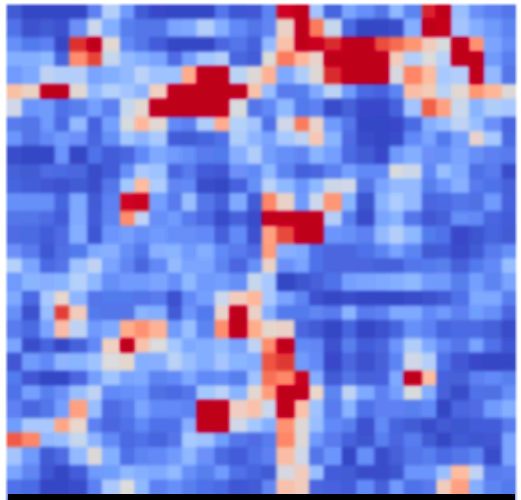

Numerical - Analytical residuals

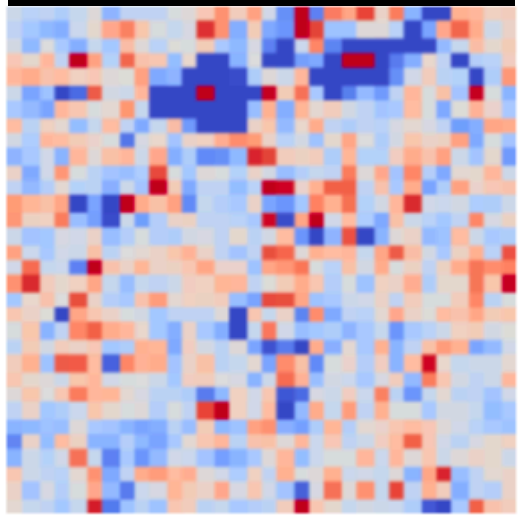

Residuals

Density field comparisons

Preliminary results from: Siyu He, Yin Li, Yu Feng, **S.H.**, Siamak Ravanbaksh, Barnabas Poczos

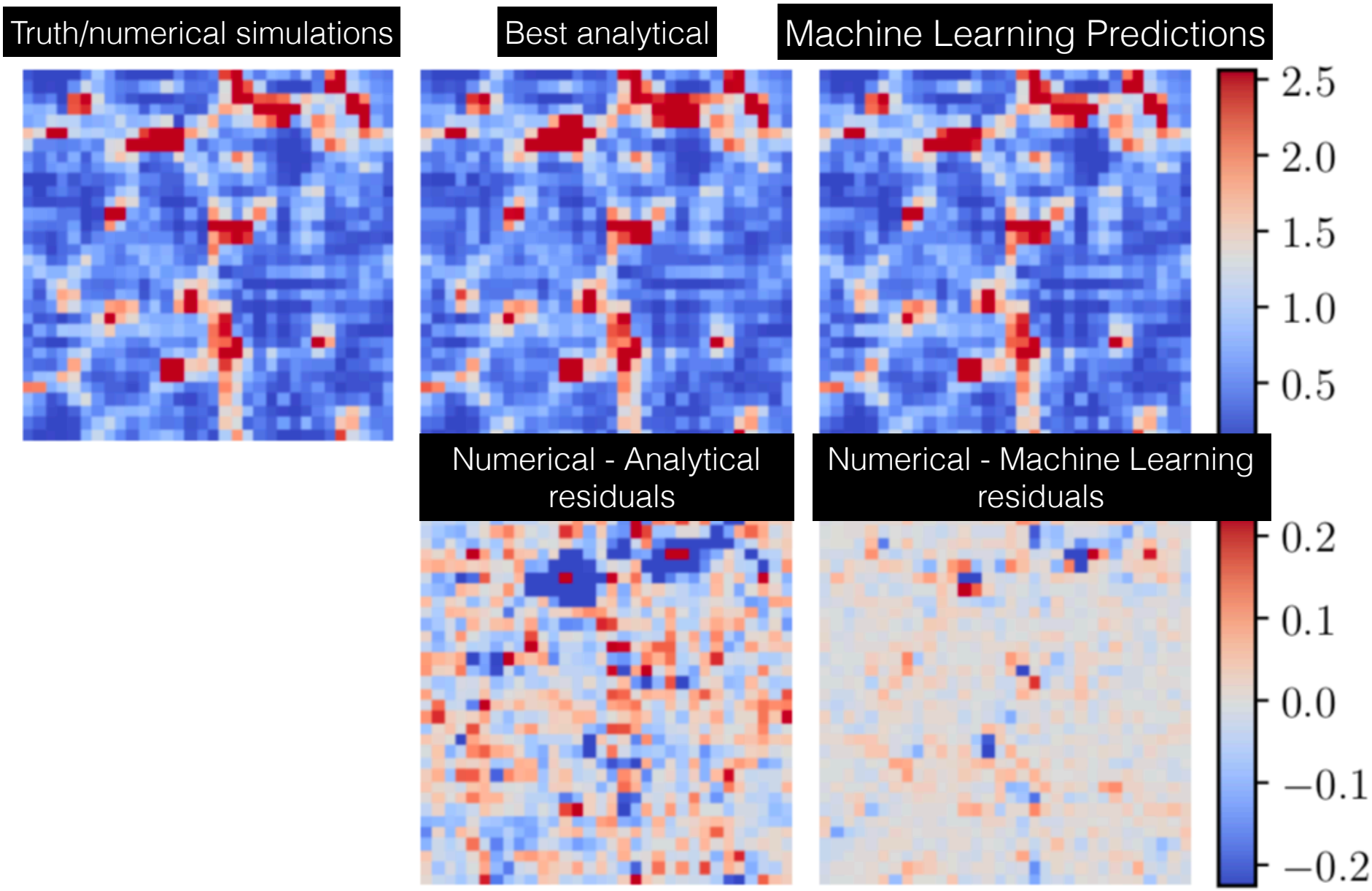

Density field comparisons

Preliminary results from: Siyu He, Yin Li, Yu Feng, **S.H.**, Siamak Ravanbaksh, Barnabas Poczos

Checking the following:

1) the average power-spectrum of 1000 sims, and
2) ratios to the true power-spectrum (T(k)), and
3) The cross-correlation coefficients.

The simulations can be predicted in O(1) minutes post training and validation.

$$T(k) = \frac{P_{\rm pred}(k)}{P_{\rm true}(k)}$$

$$r(k) = \frac{P_{\rm pred\times true}(k)}{\sqrt{P_{\rm pred}(k)P_{\rm true}(k)}}$$

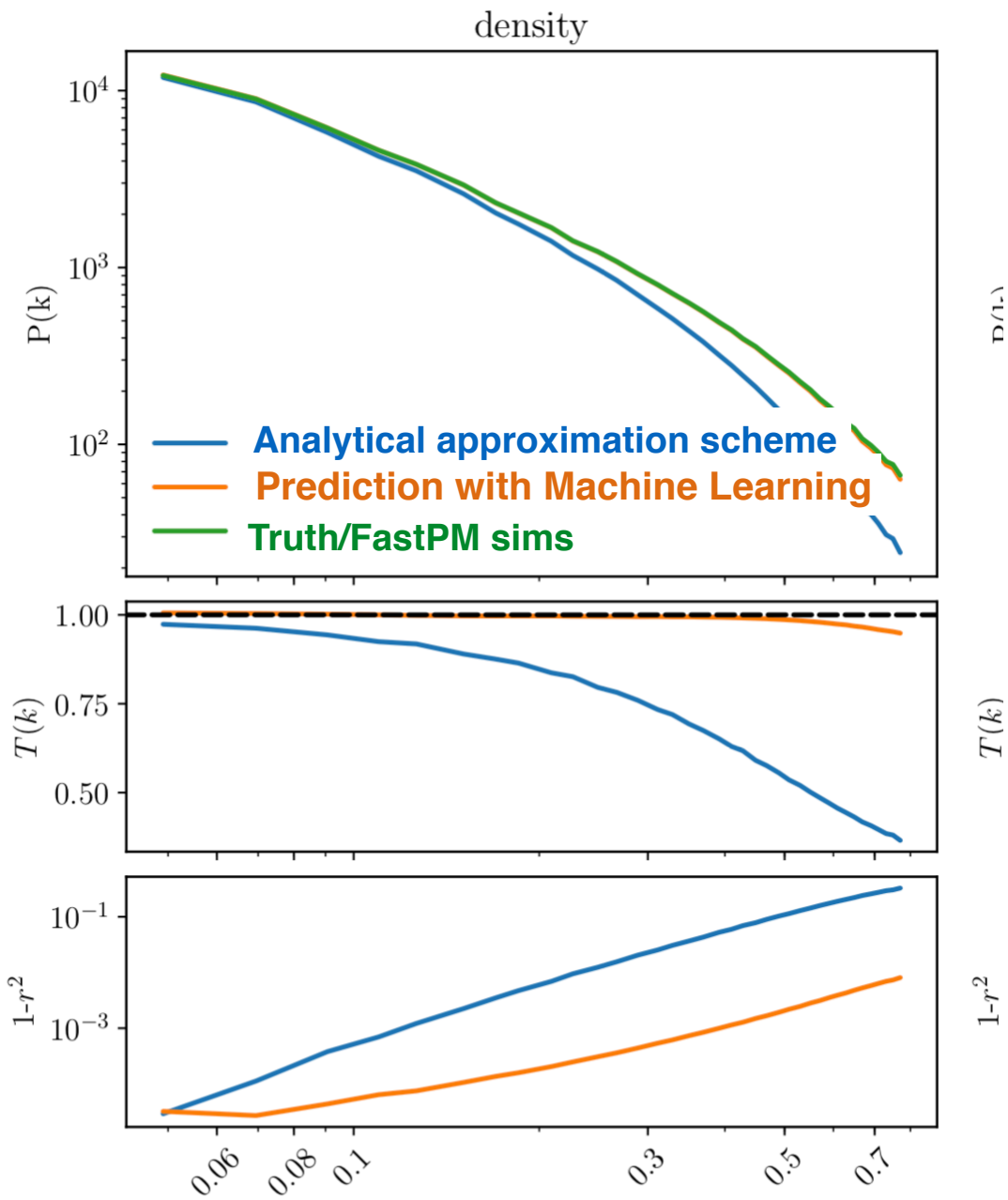

(a) Results from the density field

Preliminary results from: Siyu He, Yin Li, Yu Feng, **S.H.**, Siamak Ravanbaksh, Barnabas Poczos

Foray into understanding what the heck the Model is learning

- We first train a network with [ZA, N-body] pairs, and make prediction using ZA inputs. And we have seen that the predictions are pretty good.

- Then we analyze what the network has learned by decomposing the **input** into different **Fourier modes** and look at the **predicted power-spectra** of these modes.

- Different Fourier modes in the following form:

$$\psi(\hat{x}) = A_{\hat{k}_i} \hat{k}_i cos(\overrightarrow{k_i} \cdot \overrightarrow{x})$$

Predicting from Zeldovich Approximation fields to Fast-PM simulated fields

UNET

Input | Slight variant to Residual NN | Prediction

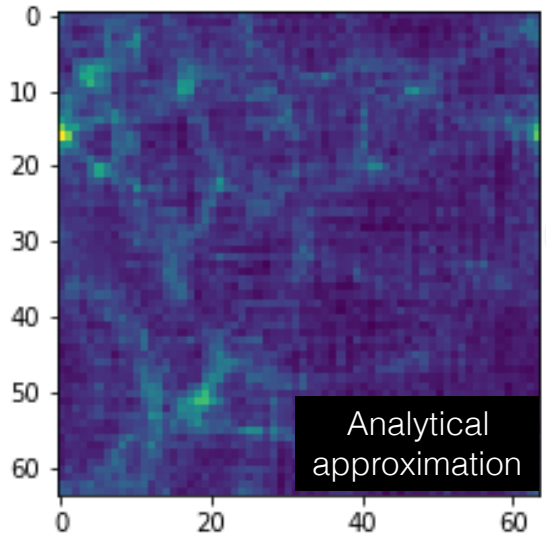

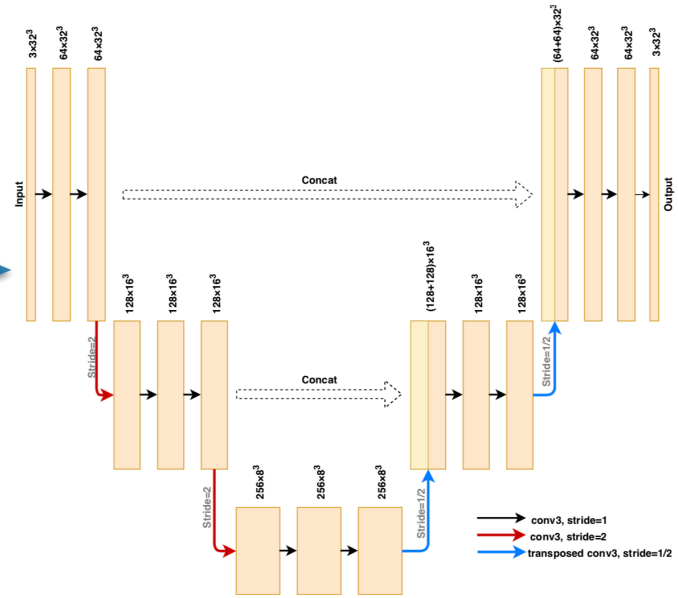

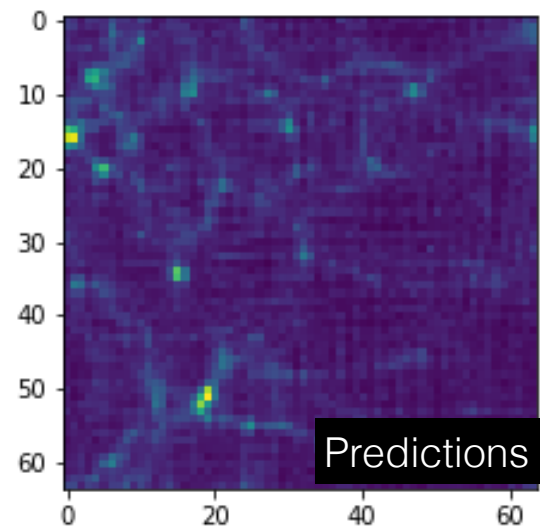

Preliminary results from: Siyu He, Yin Li, Yu Feng, **S.H.**, Siamak Ravanbaksh, Barnabas Poczos

Interrogating the learned model

What happen if we have power only one scale?

UNET

Input | Slight variant to Residual NN | Prediction

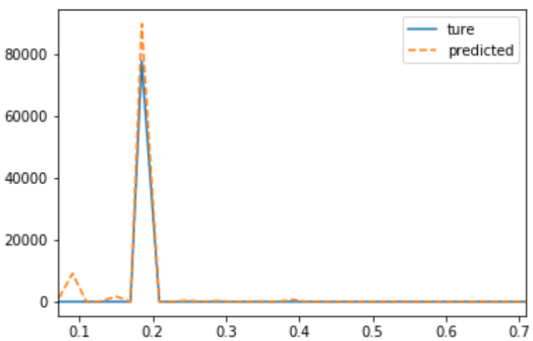

k(h/Mpc)

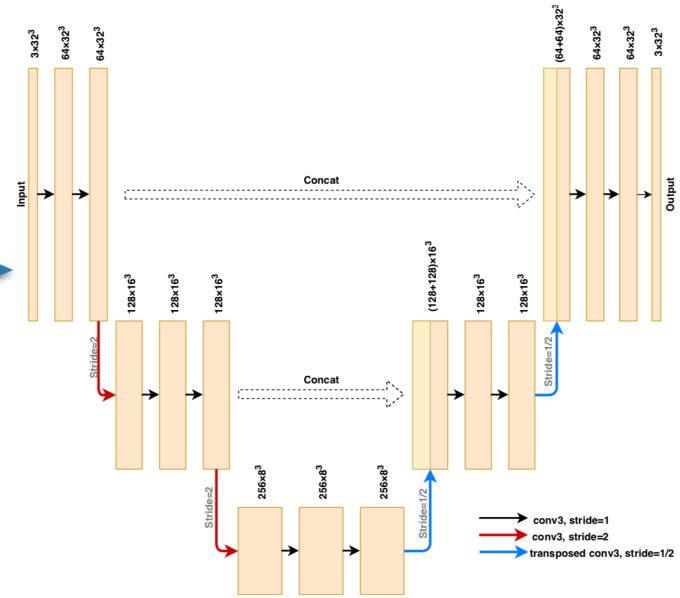

Inject Power
at one scale as input
aka: Plane Wave of particles

Preliminary results from: Siyu He, Yin Li, Yu Feng, **S.H.**, Siamak Ravanbaksh, Barnabas Poczos

Input mode: A Plane Wave

What happen if we have power only one scale?

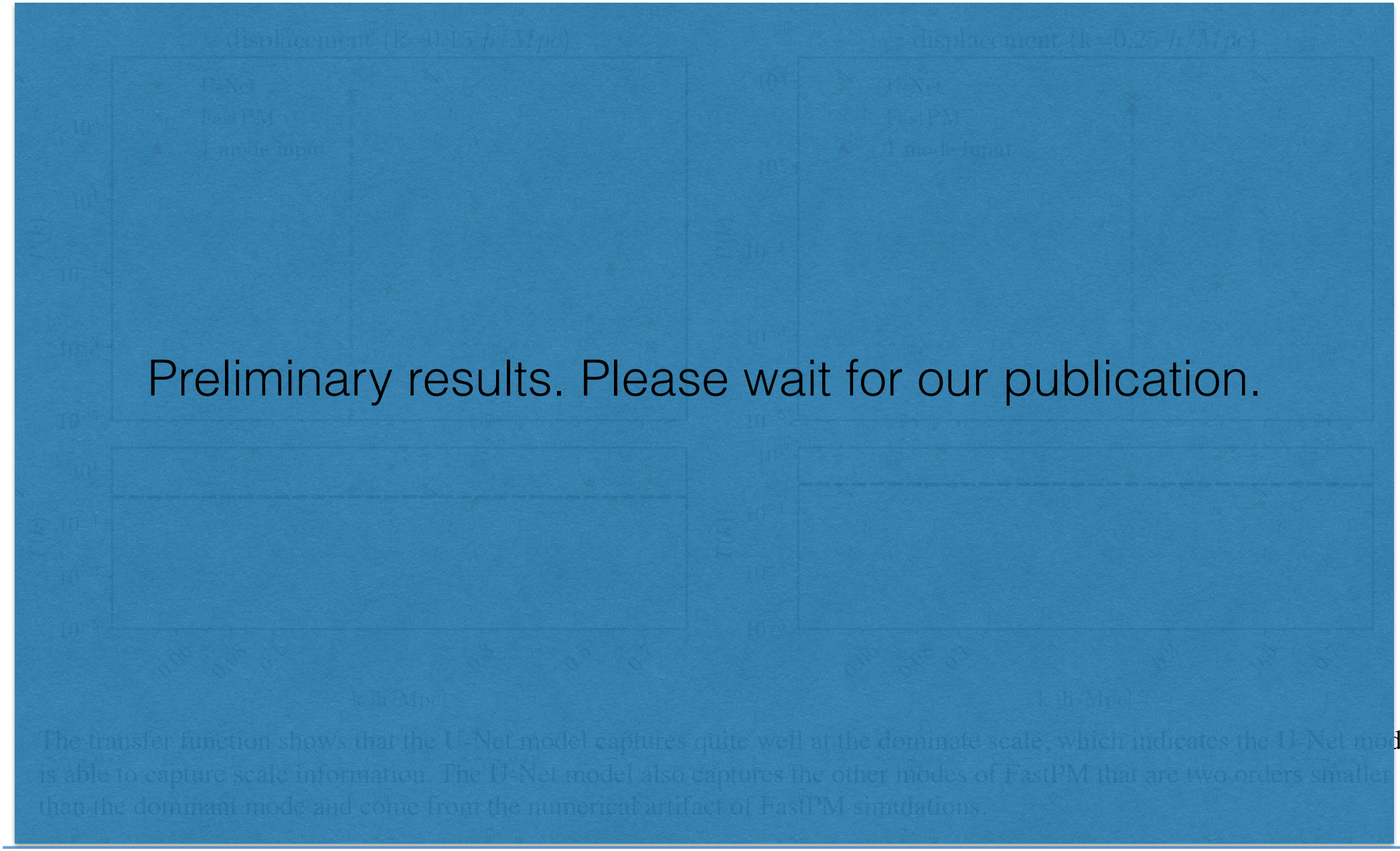

Preliminary results. Please wait for our publication.

Preliminary results from: Siyu He, Yin Li, Yu Feng, **S.H.**, Siamak Ravanbaksh, Barnabas Poczos

Interrogating the learned model

Is Rotational Invariance learnt by the model?

UNET

Input | Slight variant to Residual NN | Prediction

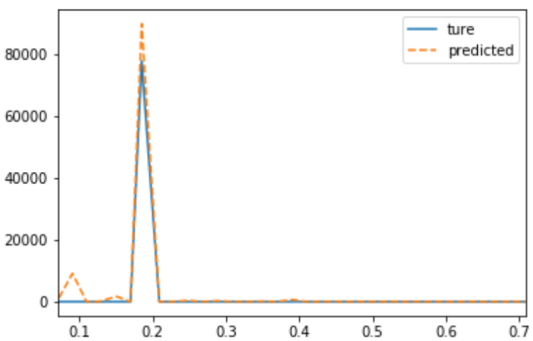

k(h/Mpc)

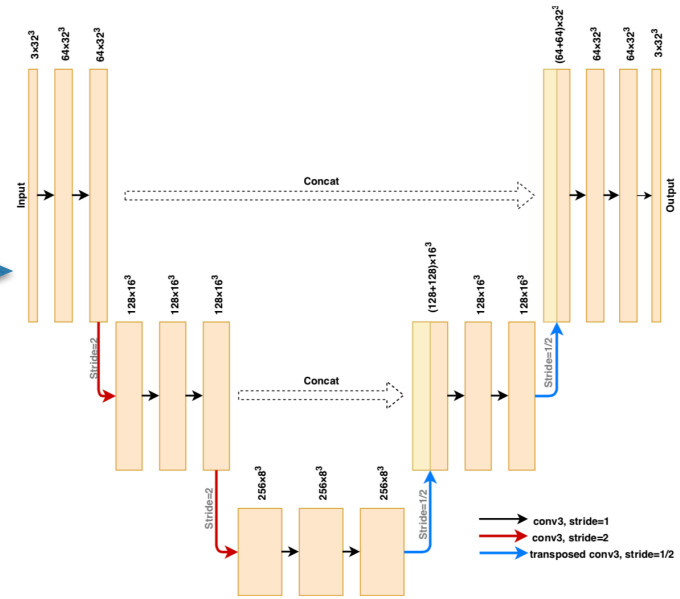

Inject Power

at $[k_x,k_y,k_z]$= [0.25,0,0]

= [0,0.25,0]

= [0,0,0.25]

Preliminary results from: Siyu He, Yin Li, Yu Feng, **S.H.**, Siamak Ravanbaksh, Barnabas Poczos

Is Rotational Invariance learnt by the model?

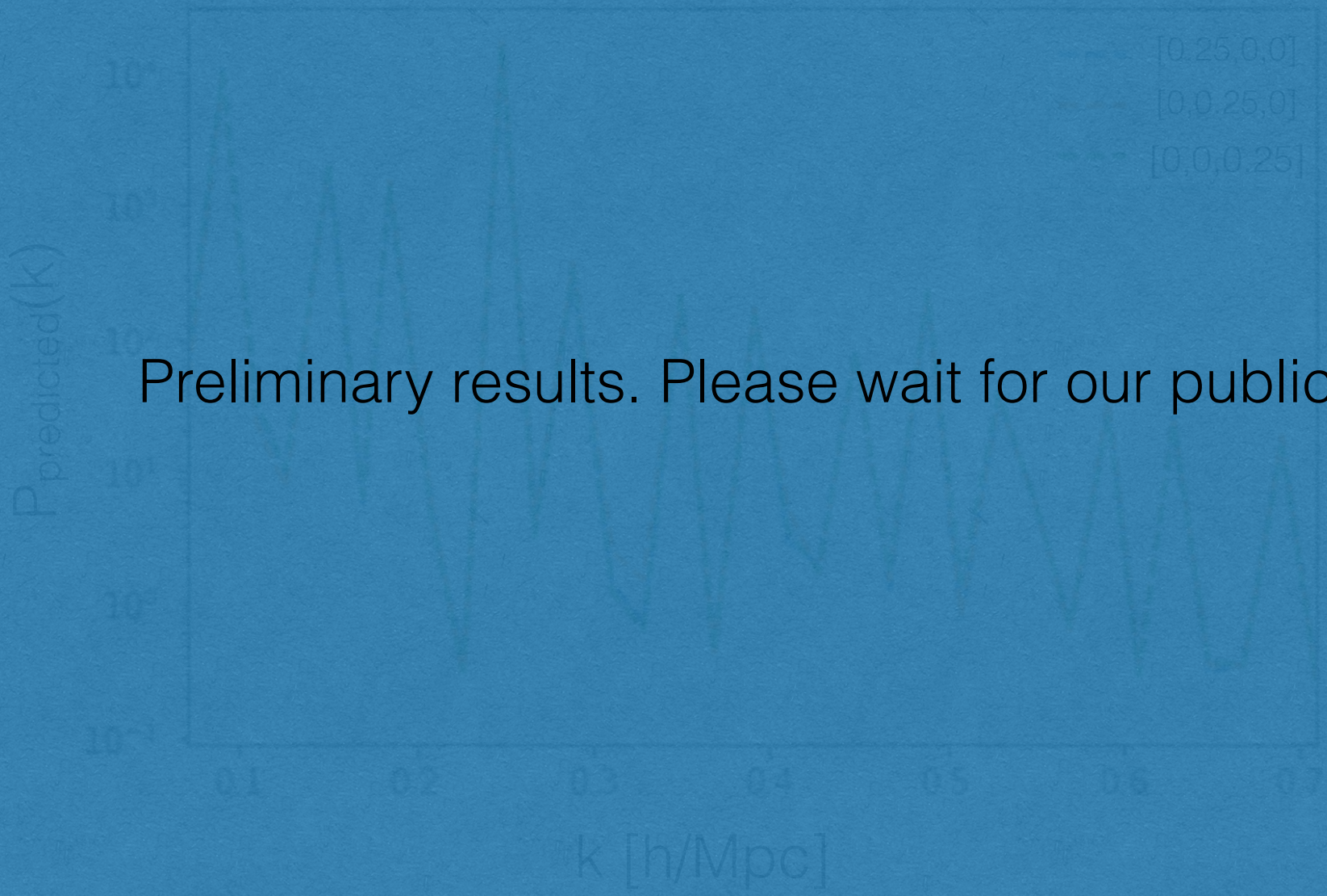

Preliminary results. Please wait for our publication.

Preliminary results from: Siyu He, Yin Li, Yu Feng, **S.H.**, Siamak Ravanbaksh, Barnabas Poczos

Is Rotational Invariance learnt by the model?

Yes, *predicted power is the similar no matter which orientation*:

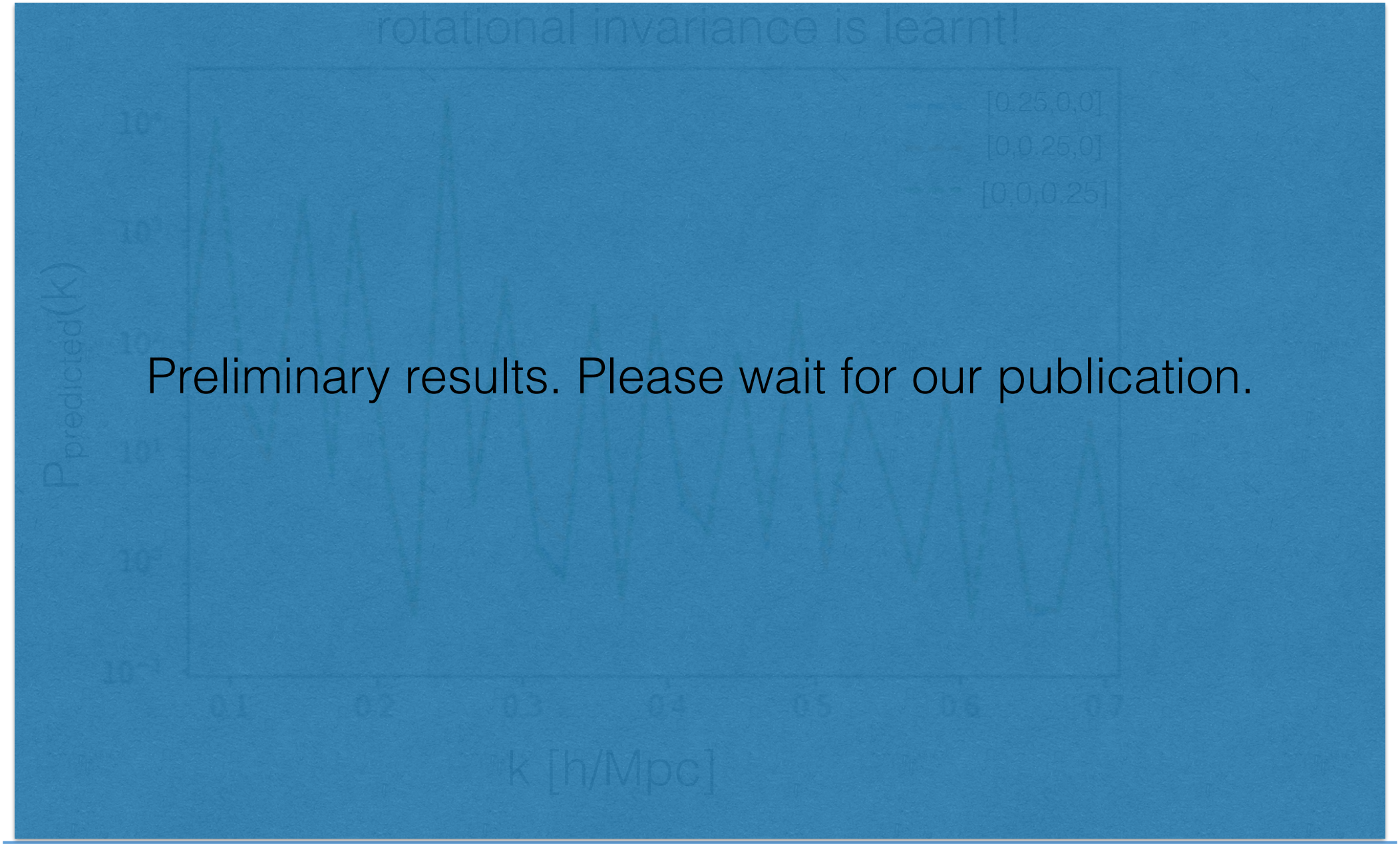

Preliminary results. Please wait for our publication.

Preliminary results from: Siyu He, Yin Li, Yu Feng, **S.H.**, Siamak Ravanbaksh, Barnabas Poczos

Interrogating the learned model

What happens if we change the phase of the input mode?

UNET

Input

Slight variant to Residual NN

Prediction

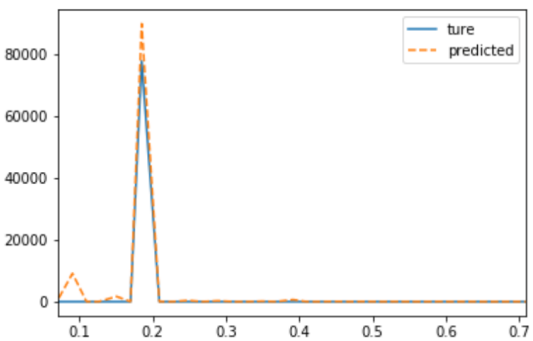

k(h/Mpc)

Inject Power
At same k,
but different phases

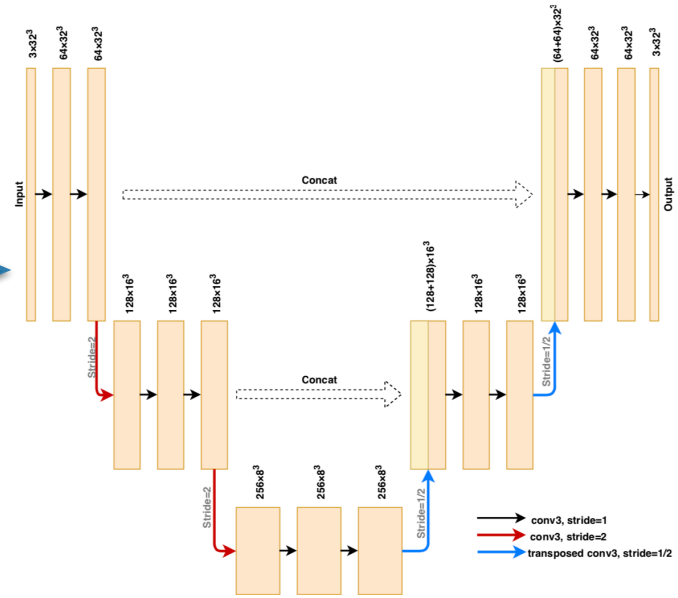

Preliminary results from: Siyu He, Yin Li, Yu Feng, **S.H.**, Siamak Ravanbaksh, Barnabas Poczos

What happens if we change the phase of the input mode?

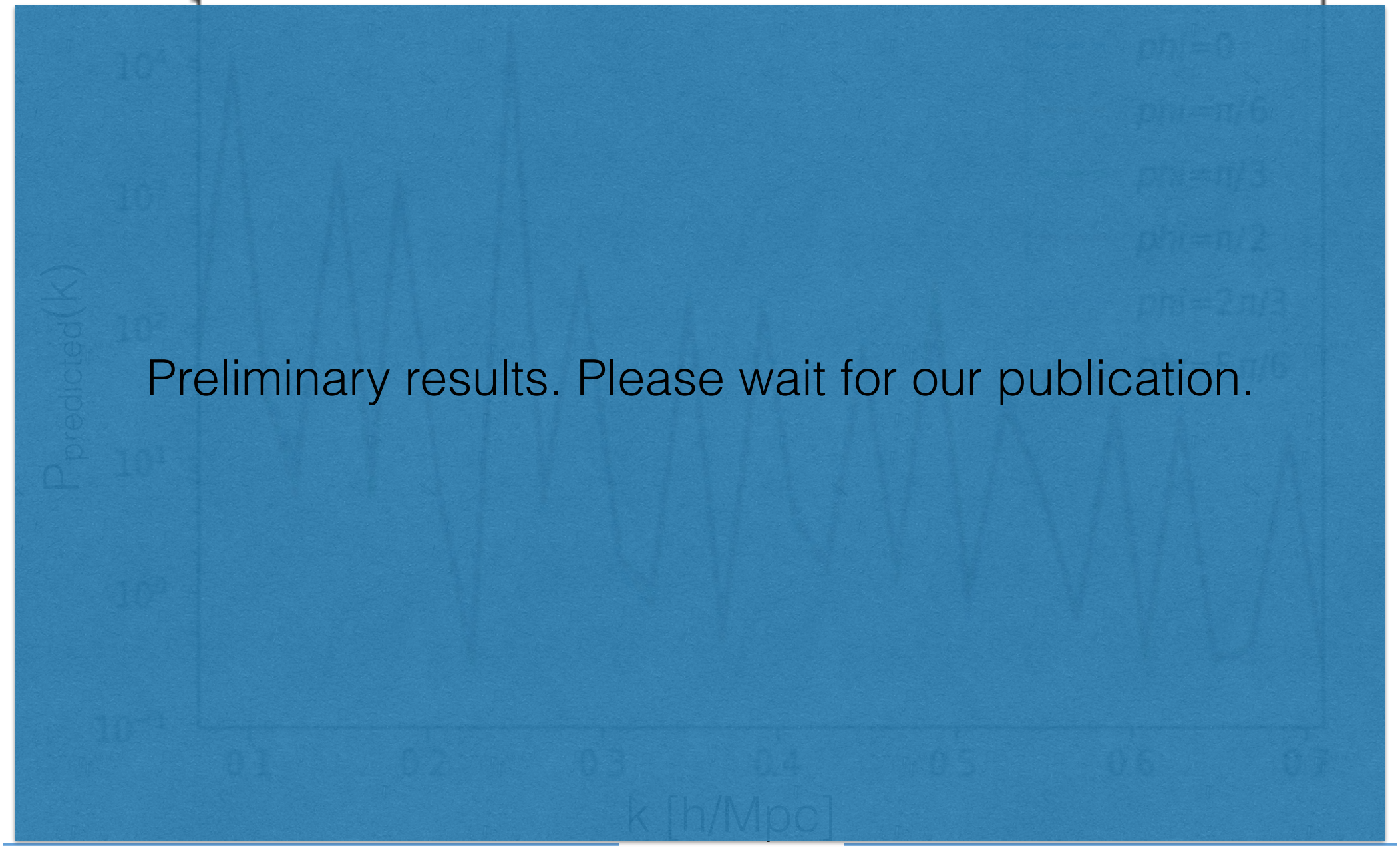

Preliminary results from: Siyu He, Yin Li, Yu Feng, **S.H.**, Siamak Ravanbaksh, Barnabas Poczos

What happens if we change the phase of the input mode?

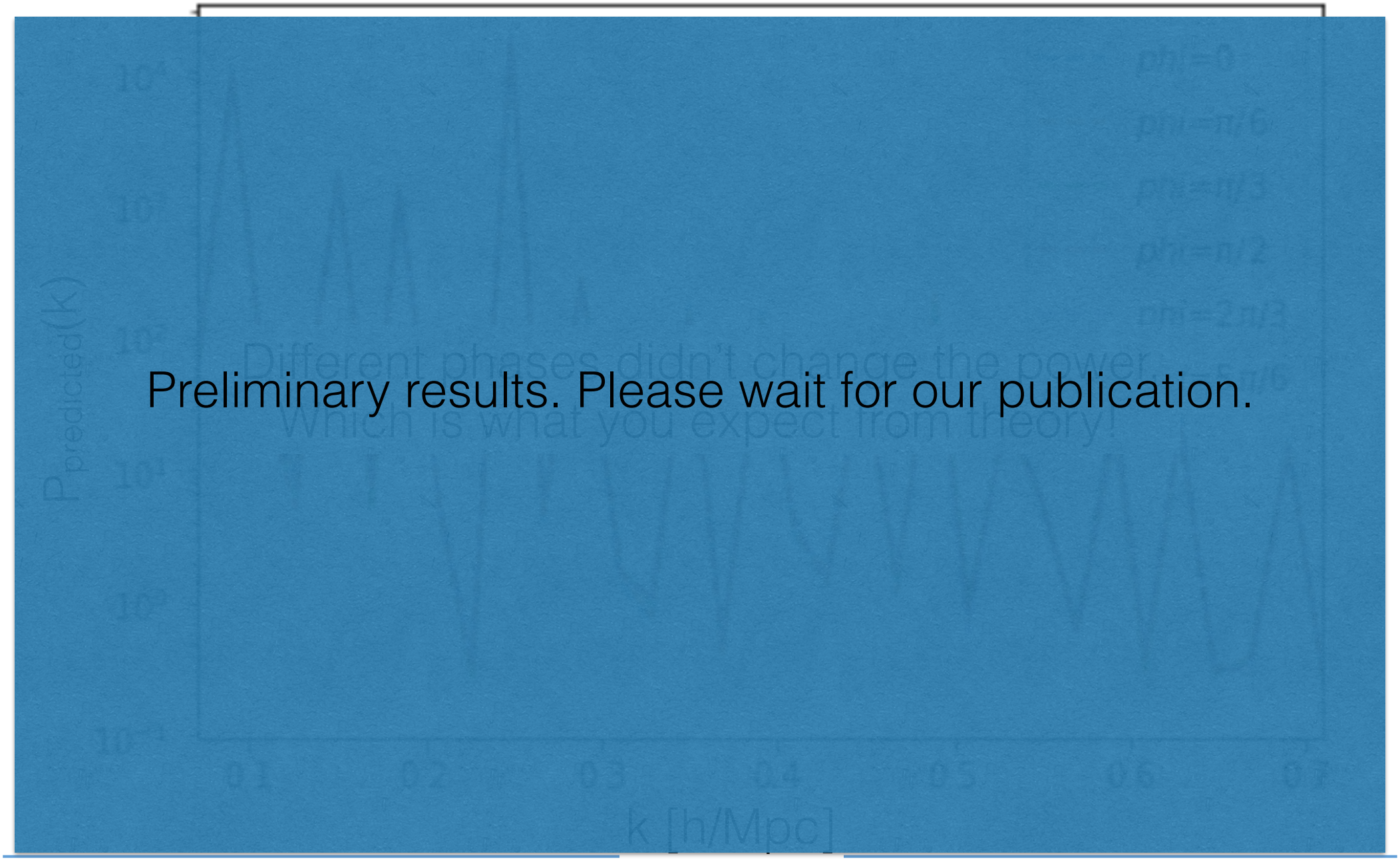

Preliminary results. Please wait for our publication.

Preliminary results from: Siyu He, Yin Li, Yu Feng, **S.H.**, Siamak Ravanbaksh, Barnabas Poczos

It seems like physics are being learned by the model…

Now as scientists, we have lots of questions…

- As an astrophysicist, do we understand where the extra information is coming in from?
- Can we get a correct estimate of the error ?
- Can we interpret the model learnt in Machine Learning?
- Can we compress the model learnt into physical laws?
- **More provocatively: Can machine learning interpolate and generalize from data just like human and find new physical laws?**

Predicting from Zeldovich Approximation fields to Fast-PM simulated fields

UNET

Input | Slight variant to Residual NN | Prediction

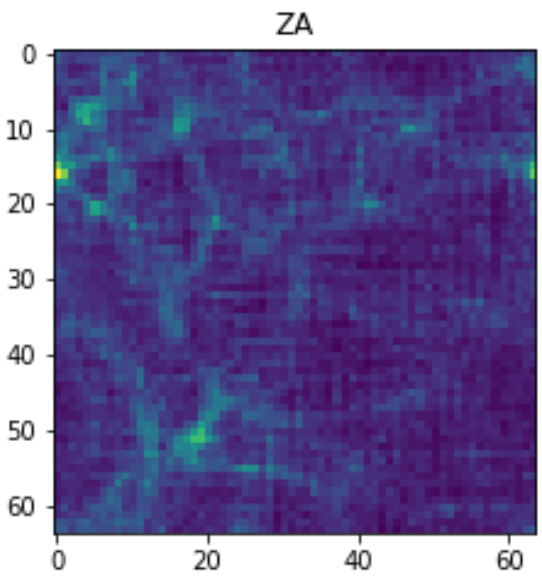

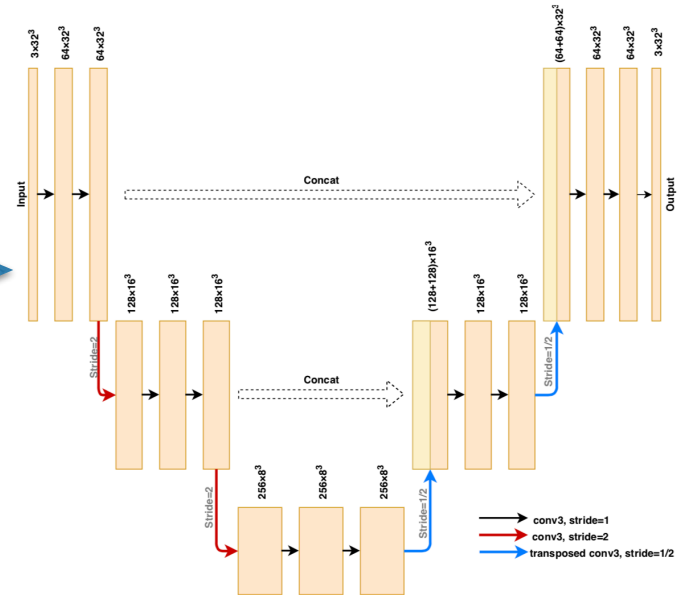

ZA maps of

Different cosmology:

A_s={0.2 A_0, 0.8A_0, 1.2A_0, 1.8A_0}

Preliminary results from: Siyu He, Yin Li, Yu Feng, **S.H.**, Siamak Ravanbaksh, Barnabas Poczos

Experiment:

1) We input Analytical approximated field of particles (of one cosmology parameter)
2) We predict particle position outputs using ML (or physics)
3) Architecture : UNet (a variant of ResNet)
4) It works very well (ask me later)
5) Question is: What happens if I input a Analytical field with different cosmology ?

Preliminary results from: Siyu He, Yin Li, Yu Feng, S.H., Siamak Ravanbaksh, Barnabas Poczos

Power-spectrum of Density field

Experiment:

1) We input Analytical approximated field of particles (of one cosmology parameter)
2) We predict particle position outputs using ML (or physics)
3) Architecture : UNet (a variant of ResNet)
4) It works very well (ask me later)
5) Question is: What happens if I input a Analytical field with different cosmology ?

Dotted line -> Prediction using ML

$$T(k) = \frac{P_{\rm pred}(k)}{P_{\rm true}(k)}$$

$$r(k) = \frac{P_{\rm pred\times true}(k)}{\sqrt{P_{\rm pred}(k)P_{\rm true}(k)}}$$

Dashed Line -> (2LPT) Theoretical predictions

Preliminary results from: Siyu He, Yin Li, Yu Feng, S.H., Siamak Ravanbaksh, Barnabas Poczos

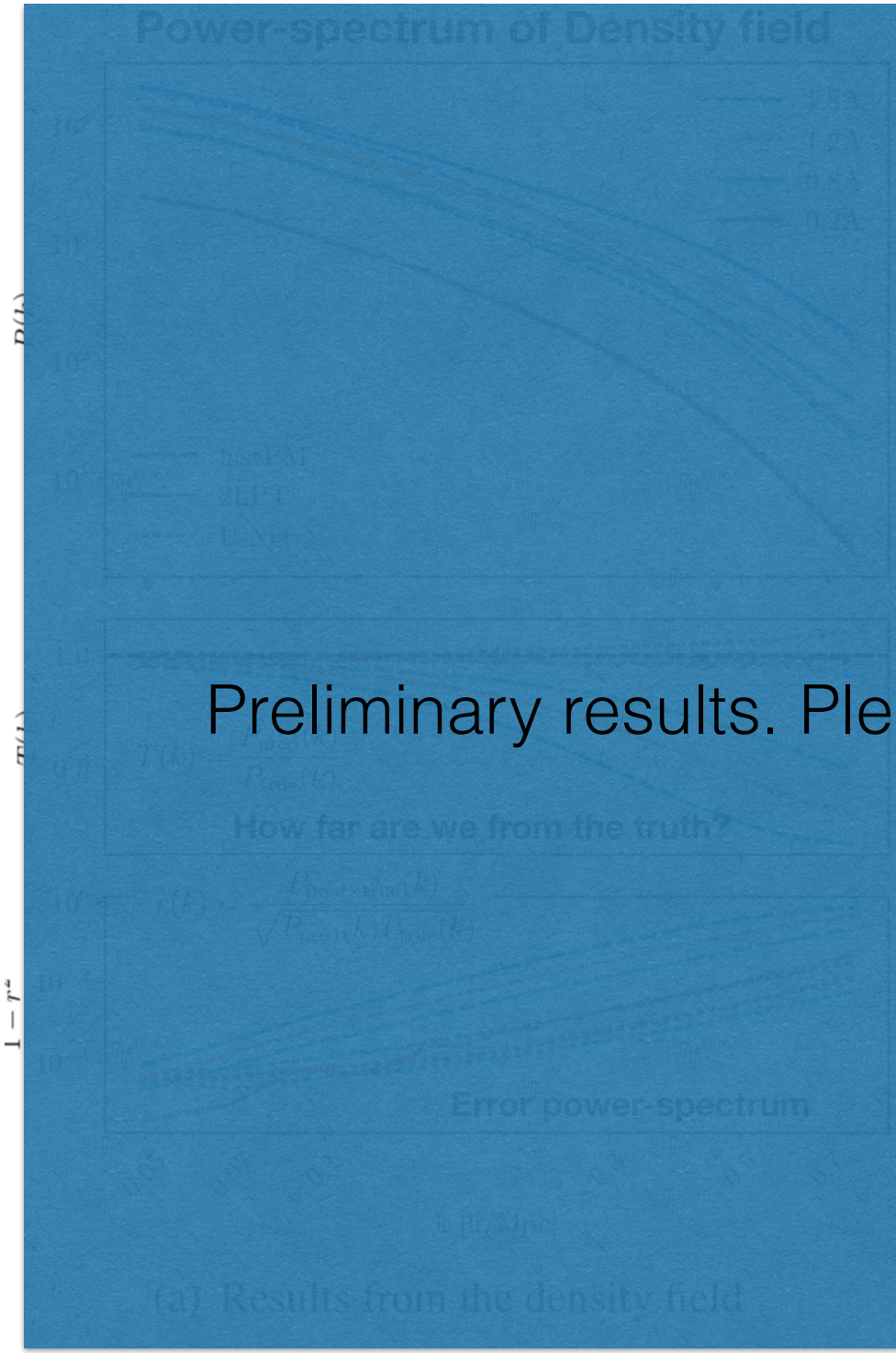

Experiment:

1) We input Analytical approximated field of particles (of one cosmology parameter)
2) We predict particle position outputs using ML (or physics)
3) Architecture : UNet (a variant of ResNet)
4) It works very well (ask me later)
5) Question is: What happens if I input a Analytical field with different cosmology ?

Dotted line -> Prediction using ML

Dashed Line -> (2LPT) Theoretical predictions

Preliminary results. Please wait for our publication.

Preliminary results from: Siyu He, Yin Li, Yu Feng, S.H., Siamak Ravanbaksh, Barnabas Poczos

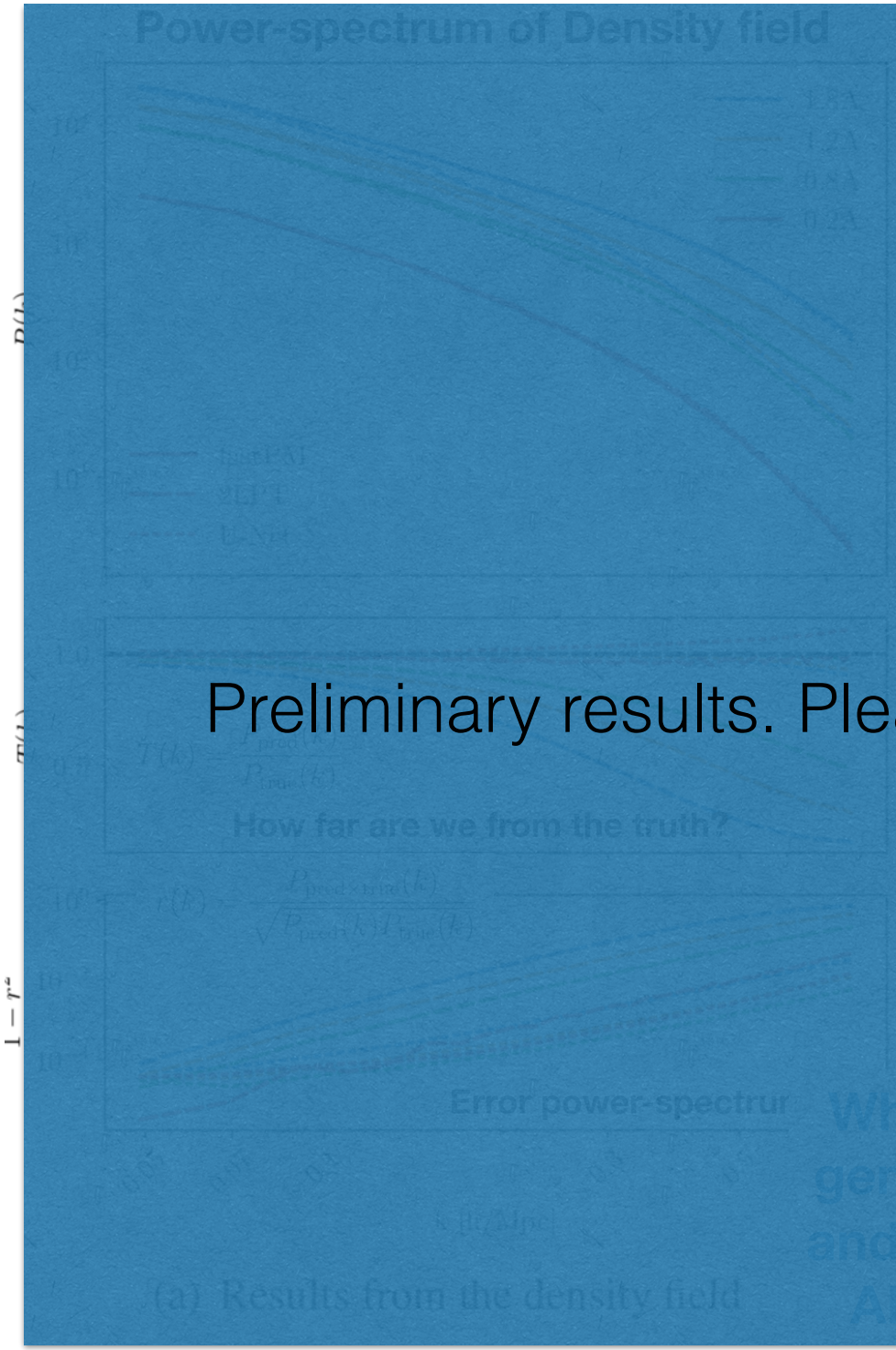

(a) Results from the density field

Experiment:

1) We input Analytical approximated field of particles (of one cosmology parameter)
2) We predict particle position outputs using ML (or physics)
3) Architecture : UNet (a variant of ResNet)
4) It works very well (ask me later)
5) Question is: What happens if I input a Analytical field with different cosmology ?

Dotted line -> Prediction using ML

Dashed Line -> (2LPT) Theoretical predictions

Why can the machine learning algorithm generalize from the one set of cosmology and still predict well for other cosmology? Aka. the test set is not the training set.

Preliminary results. Please wait for our publication.

Preliminary results from: Siyu He, Yin Li, Yu Feng, S.H., Siamak Ravanbaksh, Barnabas Poczos

Let's leave you with questions: Why?

- Is it possible that the model is generalizing rules from the training set that can deal with cosmological inputs with different parameter sets?
- Or maybe the model has seen these parameter sets ?

My possible climb to fame?

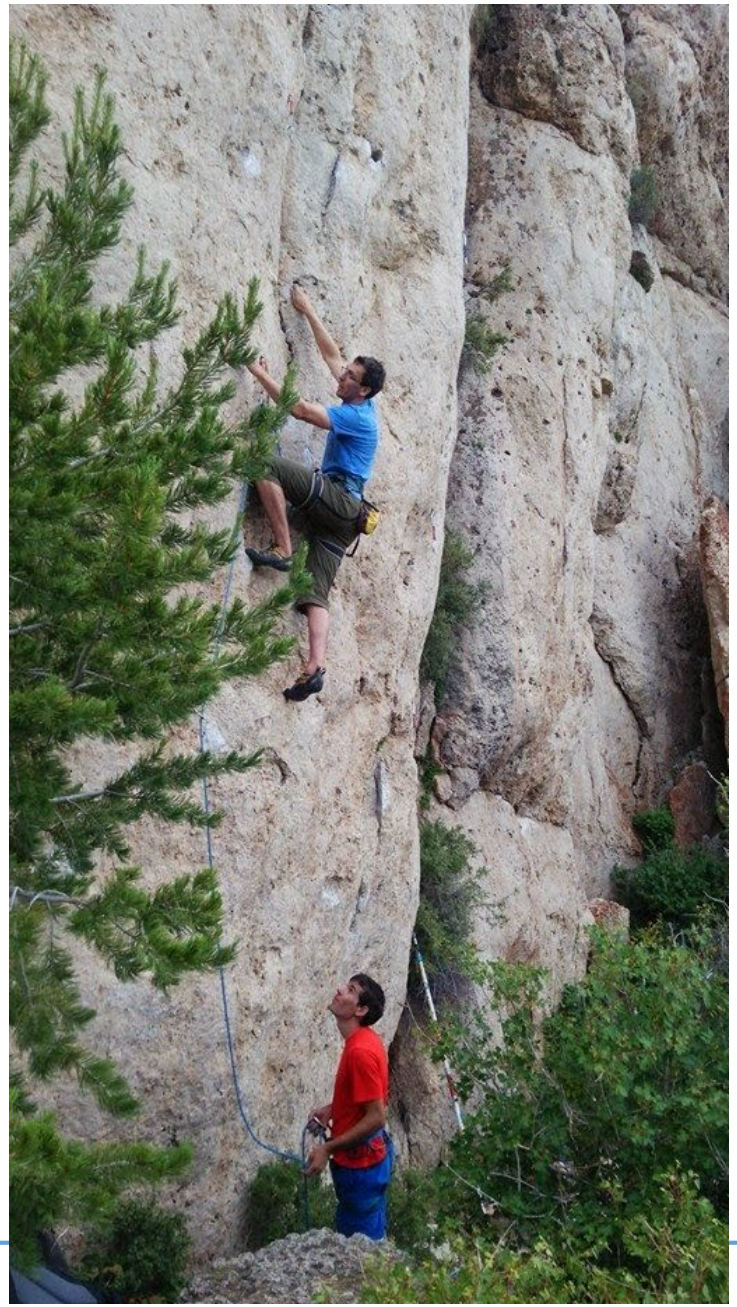

- Understanding Machine Learning?
- Compressing the learned model into physical laws?
- Discover new laws of nature?

Possible reason ?

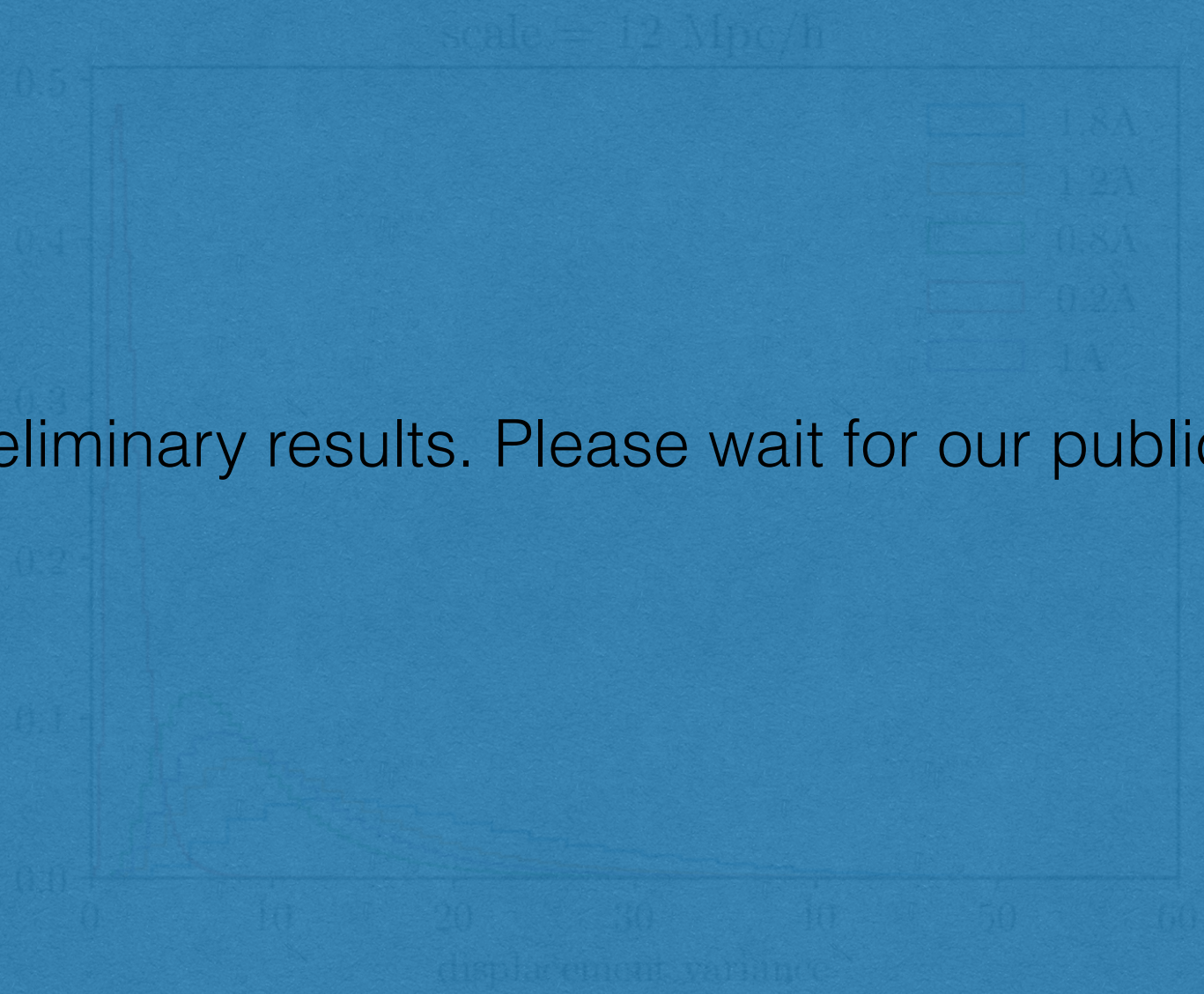

Preliminary results. Please wait for our publication.

Preliminary results from: Siyu He, Yin Li, Yu Feng, **S.H.**, Siamak Ravanbaksh, Barnabas Poczos