Multifield D5 brane inflation in the throat

Dibya Chakraborty

University of Guanajuato, Mexico

Collaborators: Dr. O Loaiza, Dr. G Niz, Dr I Zavala

27th International conference on Supersymmetry and Unification of Fundamental Interactions SUSY2019

Outline

Inflation

- The period of accelerated expansion(Exponential) of early Universe.

$$ds^2 = -dt^2 + a^2(t)dx^2 \quad \text{with} \quad \ddot{a} > 0$$

- The **horizon** problem, **flatness** problem and **magnetic monopoles** are taken care of.

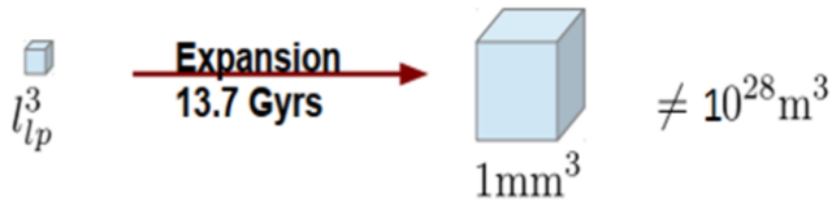

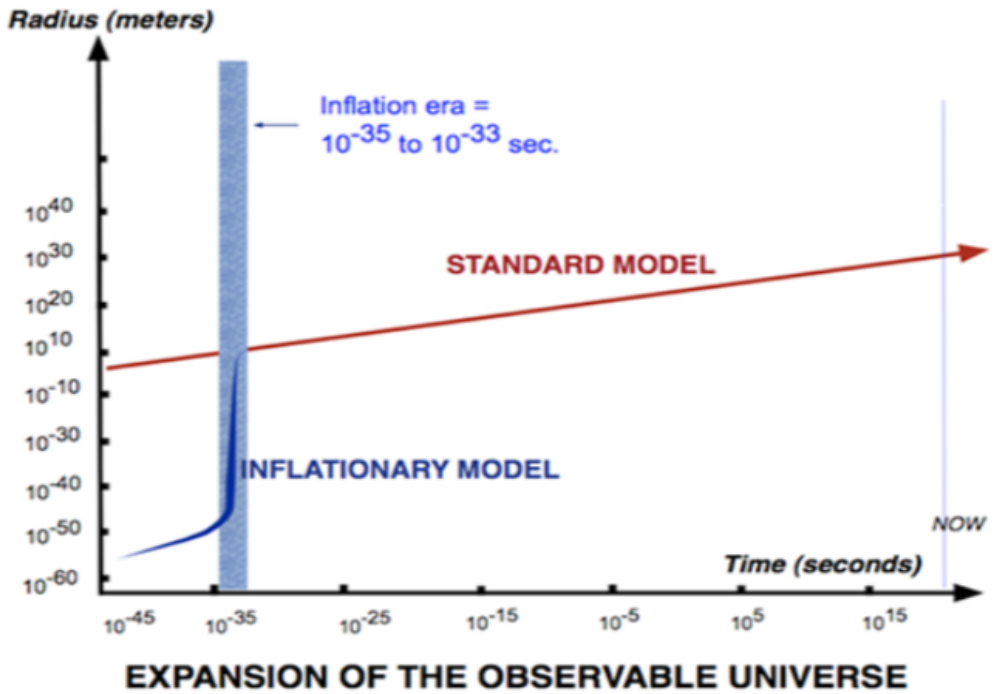

Inflation

- **Toy Model:** Canonical scalar field slowly rolling down a potential

$$S = \int d^4x\sqrt{-g}\left[\frac{M_{pl}^2}{2}R - \frac{1}{2}\partial_\mu\phi\partial^\mu\phi - V(\phi)\right]$$

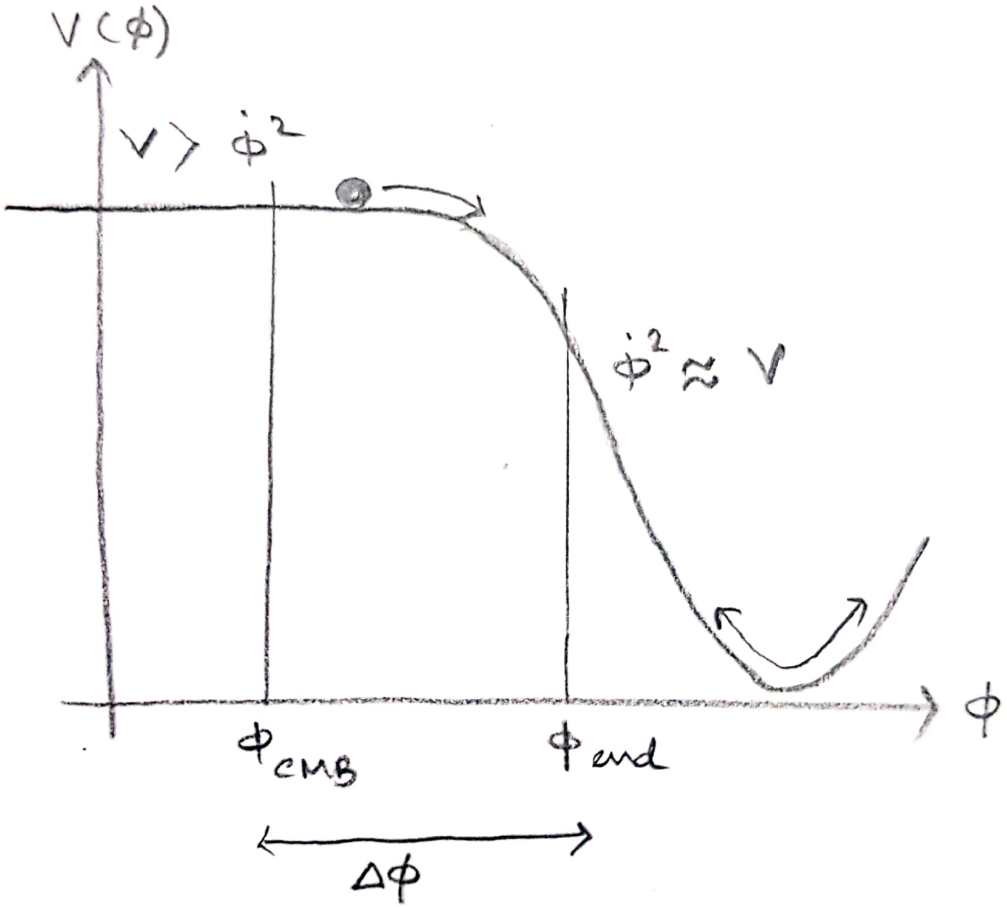

Key ingredients:

- String flux compactification of type IIB string theory on CY3
- Probe D5-brane moving in Warped Resolved Conifold throat approximation
- We study the multifield cosmological evolution of a probe brane moving near the tip region of WRC.

Key ingredients:

- String flux compactification of type IIB string theory on CY3
- Probe D5-brane moving in Warped Resolved Conifold throat approximation
- We study the multifield cosmological evolution of a probe brane moving near the tip region of WRC.

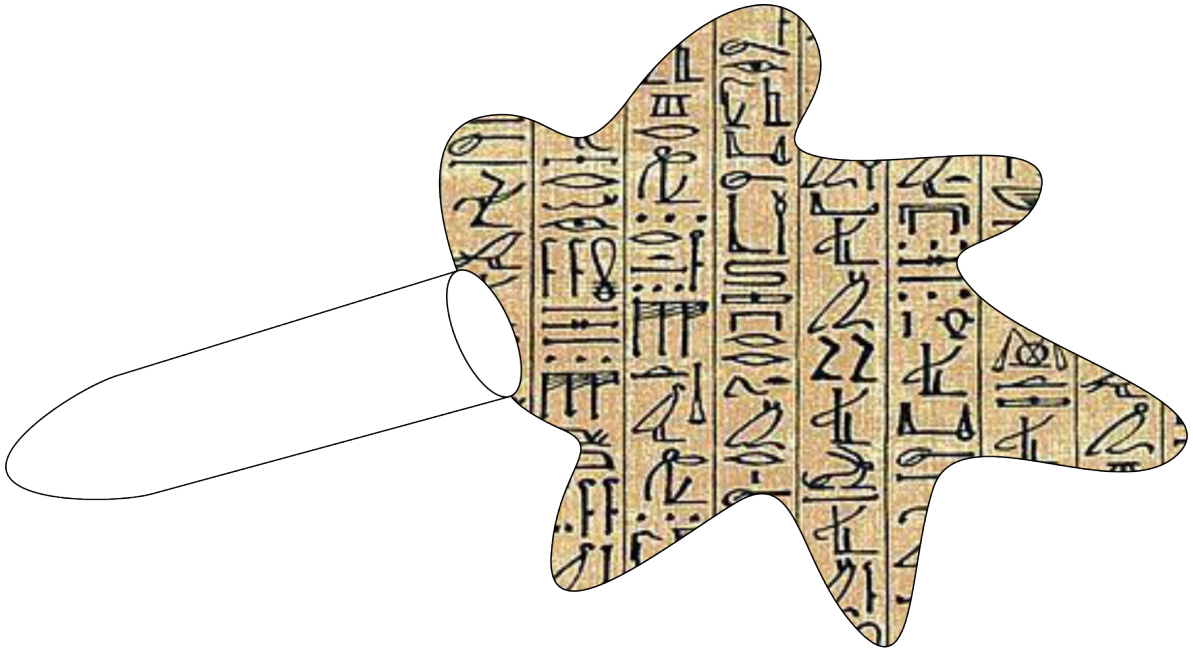

Figure: The Bulk

Resolved Conifold

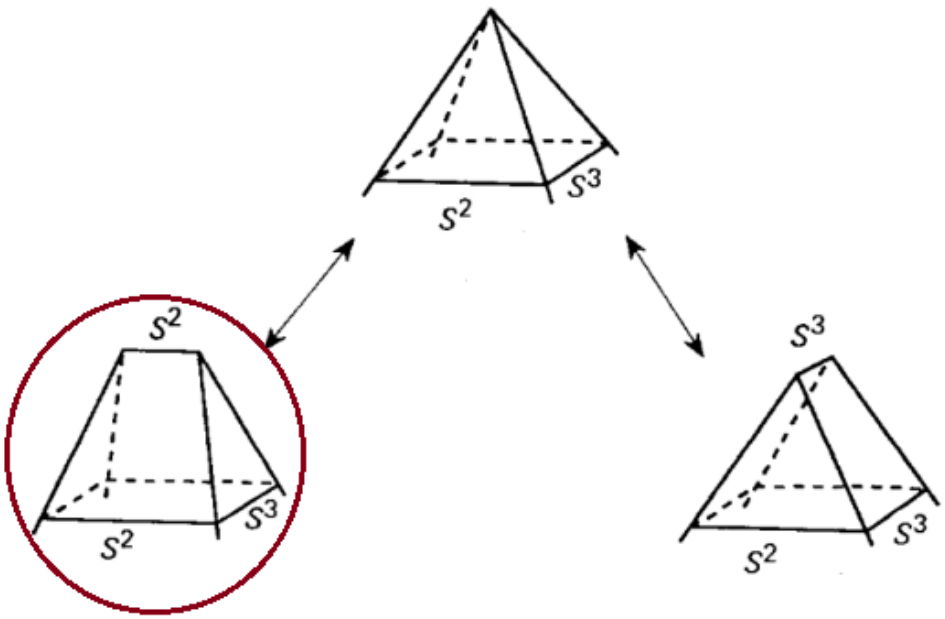

The metric on a Resolved Conifold(RC) looks like,

$$ds^2_{RC} = \tilde{g}_{mn} dy^m dy^n = \left(\frac{r^2+6u^2}{r^2+9u^2}\right) dr^2 + \frac{1}{9}\left(\frac{r^2+9u^2}{r^2+6u^2}\right) r^2 (d\psi + \cos\theta_1 d\phi_1 + \cos\theta_2 d\phi_2)^2 + \frac{1}{6}(d\theta_1^2 + \sin^2\theta_1 d\phi_1^2) + \frac{1}{6}(r^2+6u^2)\times (d\theta_2^2 + \sin^2\theta_2 d\phi_2^2)$$

I R. Klebanov, A. Murugan JHEP 0703:042,2007

Warped Resolved Conifold(WRC)

The warped 10D spacetime is obtained by placing N D3-branes at the tip(localised at the north pole of S^2) or placing M D5-brane in the throat.

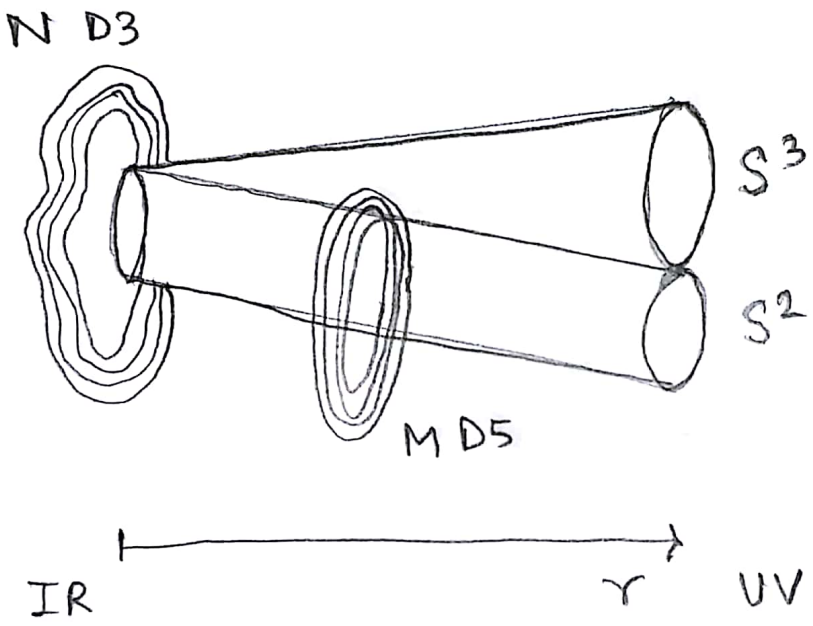

Warped Resolved Conifold(WRC)

The warped 10D spacetime is obtained by placing N D3-branes at the tip(localised at the north pole of S^2) or placing M D5-brane in the throat or both.

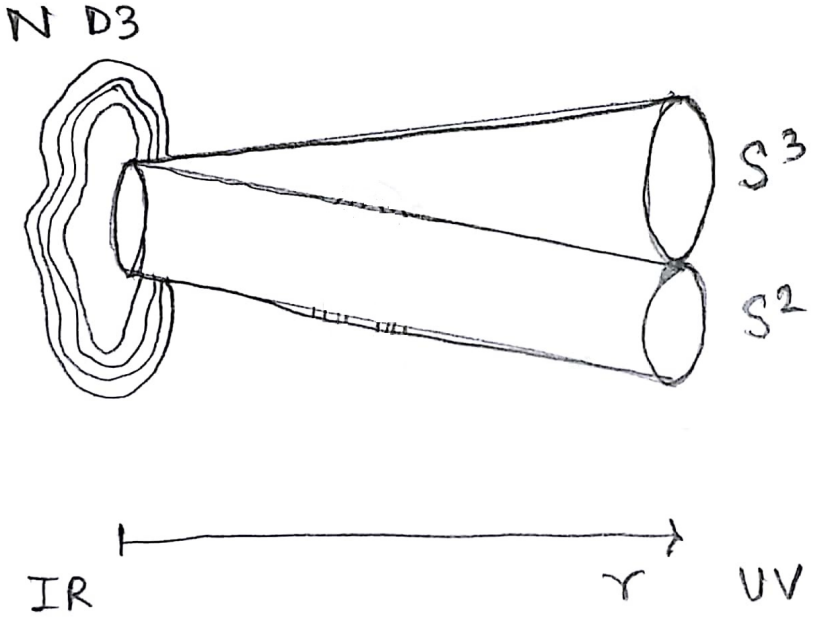

The resulting geometry is the Warped Resolved Conifold with 10D metric

$$ds^2 = \mathcal{H}^{-1/2}(\rho, \theta_2) ds^2_{FRW} + \mathcal{H}^{1/2}(\rho, \theta_2) ds^2_{RC}$$

L.A. Zayas, A.A. Tseytlin JHEP 0011:028,2000

Warped Resolved Conifold(WRC)

The warped 10D spacetime is obtained by placing N D3-branes at the tip(localised at the north pole of S^2) or placing M D5-brane in the throat or both.

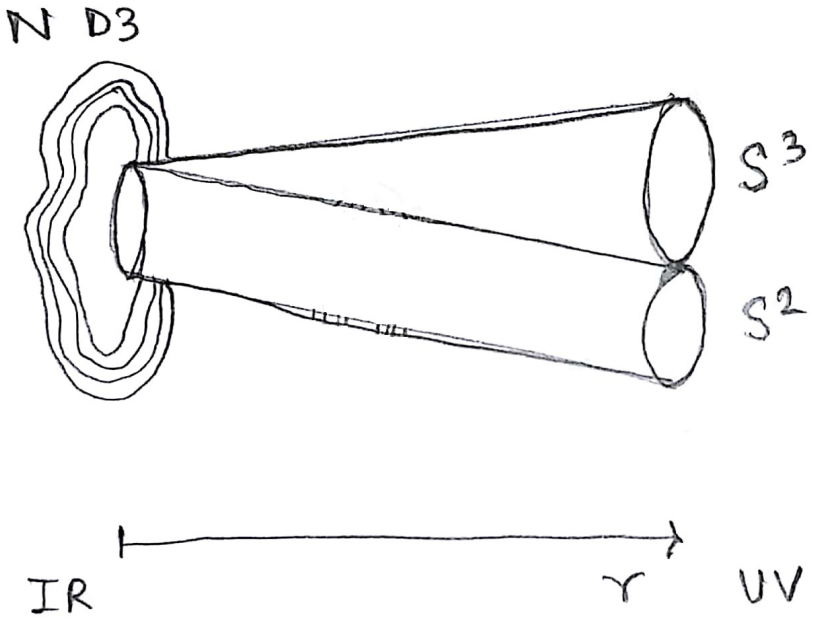

Expression for the WRC warp factor is given by

$$\mathcal{H}(\rho,\theta) = (L_{T_{1,1}}/3u)^4 \sum_{l=0}^{\infty}(2l+1)H_l^A(\rho)P_l[\cos\theta]$$

I R. Klebanov, A. Murugan JHEP 0703:042,2007

The D5 brane embedding

We take the simple embedding of the D5-brane in the 10D spacetime as in[1,2]

$$\xi^a = (x^\mu, \theta_1, \phi_1) \quad \text{where} \quad \mu = 0, 1, 2, 3$$

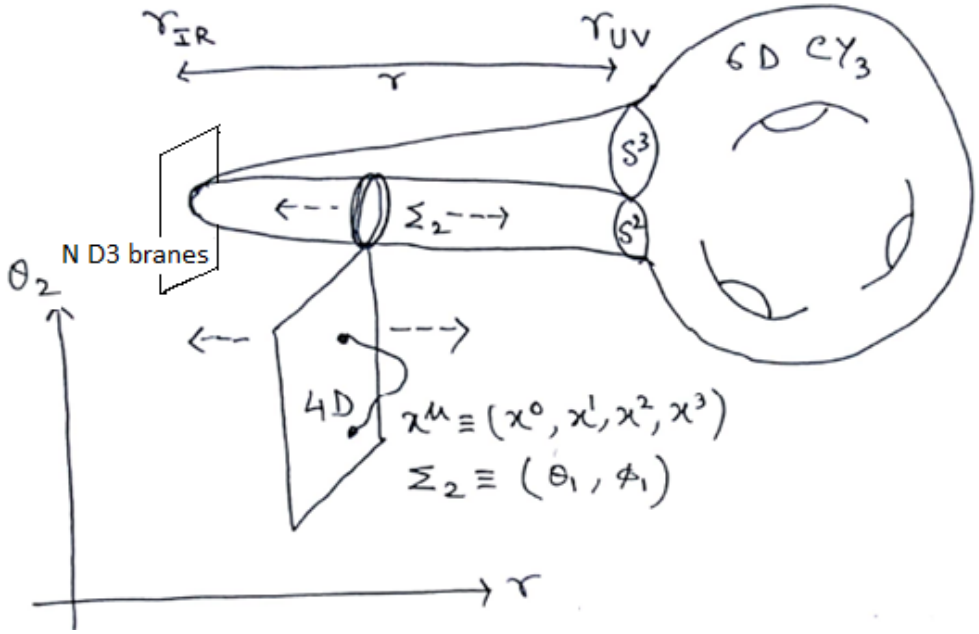

We turn on a non-zero worldvolume electric flux F2 of strength q, along Σ_2.

[1] Z. Kenton, S. Thomas JHEP02(2015)
[2] M. Becker, L. Leblond, S. Shandera Phys.Rev.D,2007

The D5-brane dynamics

We consider a warped metric ansatz for a flux compactification given by,

$$ds^2 = e^{2A(y)} g_{\mu\nu} dx^\mu dx^\nu + e^{-2A(y)} \tilde{g}_{mn} dy^m dy^n$$

SB Giddings, S Kachru, J Polchinsky Phys.Rev.D 2002

The D5-brane dynamics is given by the DBI and CS term,

$$S_{D5} = S_{D5}^{DBI} + S_{D5}^{CS}$$

we can write down the 4D effctive action,

$$= \int d^4x \sqrt{g_{FRW}} \left[\frac{M_p}{2} \mathcal{R}_4 + \frac{1}{2} G_{ab} \partial_\mu \phi^a \partial^\mu \phi^b - V(r, \theta_2) \right]$$

The potential $V(r,\theta)$

Where G_{ab} is,

$$G_{ab} = \begin{pmatrix} 4\pi p T_5 \mathcal{F}^{1/2} \frac{r^2+6u^2}{r^2+9u^2} & 0 \\ 0 & 4\pi p T_5 \mathcal{F}^{1/2} \frac{r^2+6u^2}{6} \end{pmatrix}$$

We consider brane potential of the general form,

$$V(r,\theta) = V_0 + \varphi(r) + \lambda(\bar{\Phi}_- + \Phi_h), \quad \lambda = 4\pi^2 l_s^2 p q T_5 g_s, \quad \rho = \frac{r}{3u}$$

$$\varphi(r) = 4\pi p T_5 \mathcal{H}^{-1}[\mathcal{F}^{1/2} - l_s^2 \pi q g_s], \text{ where, } \mathcal{F} \equiv \frac{\mathcal{H}}{9}(r^2+3u^2)^2 + (\pi l_s^2 q)^2$$

$$\bar{\Phi}_- = \frac{5}{72}[81(9\rho^2-2)\rho^2 + 162\log(9(\rho^2+1)) - 9 - 160\log(10)]$$

$$\Phi_h = a_0\left[\frac{2}{\rho^2} - 2\log\left(\frac{1}{\rho^2}\right)\right] + 2a_1\left[6 + \frac{1}{\rho^2} - 2(2+.\rho^2)\log\left(1+\frac{1}{\rho^2}\right)\right]\cos\theta$$
$$+\frac{b_1}{2}(2+3\rho^2)\cos\theta$$

$$\mathcal{H} = \left(\frac{L_{T_{1,1}}}{3u}\right)^4\left(\frac{2}{\rho^2} - 2\ln\left(\frac{1}{\rho}^2 + 1\right)\right), \quad L^4_{T_{1,1}} = \frac{27\pi}{4} N g_s l_s^4$$

Z. Kenton, S. Thomas JHEP02(2015)

The potential $V(r,\theta)$

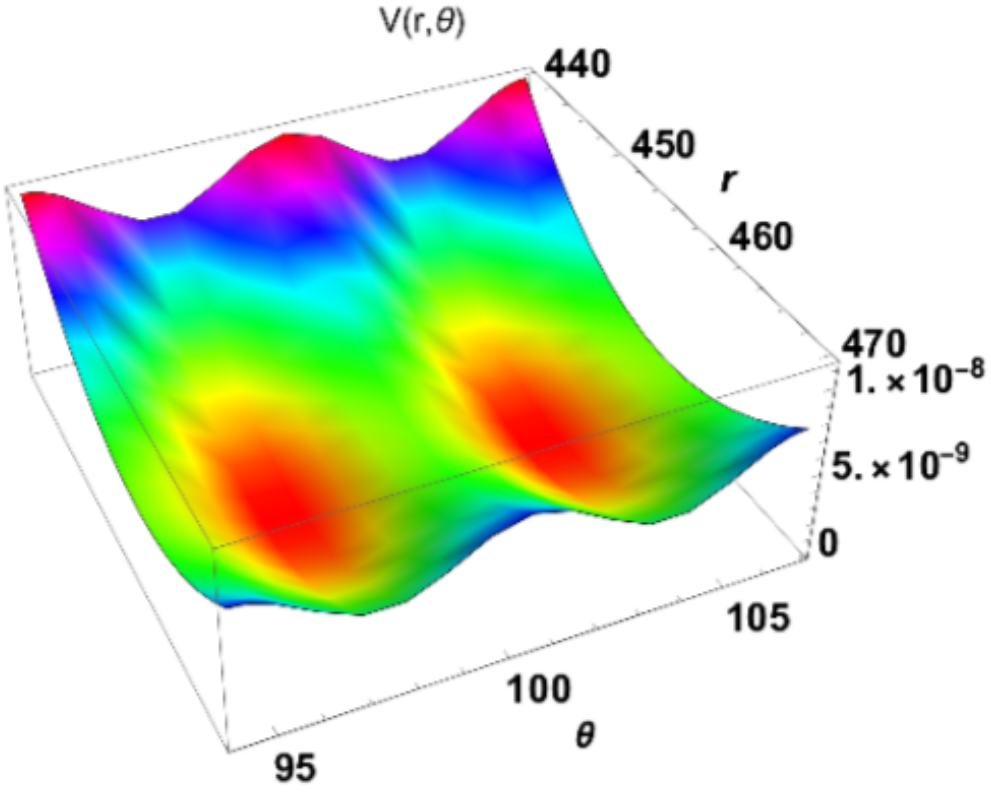

N	g_s	q	u	ℓ_s	a_0	a_1	b_1
1000	0.01	70	$50l_s$	501.961	0.1	0.0001	0.0001

The hierarchies of scales:

$$M_{pl} > M_s > M_C > H$$

D5-brane multifield inflationary evolution

The background EOM can be written as,

$$(\phi^a)'' + 3\left(1 - \frac{\varphi'^2}{6M_p^2}\right)(\phi^a)' + \Gamma^a_{bc}(\phi^b)'(\phi^c)' + \frac{1}{H^2}G^{ab}\partial_b V = 0$$

$$H^2 = \frac{V}{3M_p^2}(1 - \frac{\varphi'^2}{6M_p^2}) \text{ where } \varphi'^2 = G_{ab}v^a v^b$$

The decay constant is given by, $f = \sqrt{G_{\theta\theta}}$

Choices of IC

Decay constants for different values of the wrapping number p for the case study with $r_{min} = 456.797$ and $\theta_{min} = 33\pi$, using values of the parameters in previous table.

p	f/M_p	$r_{initial}$	$\theta_{initial}$	N_{tot}
90	7.07	400	105.873	81.83
77	6.54	410	105.973	79.24
65	6.01	430	106.073	75.62
55	5.52	500	106.173	73.06
46	5.05	380	106.373	80.70
37	4.53	410	106.473	75.64

K. Kooner, S. Parameshawaran, I Zavala Phys. Lett B 2016

Field behavior

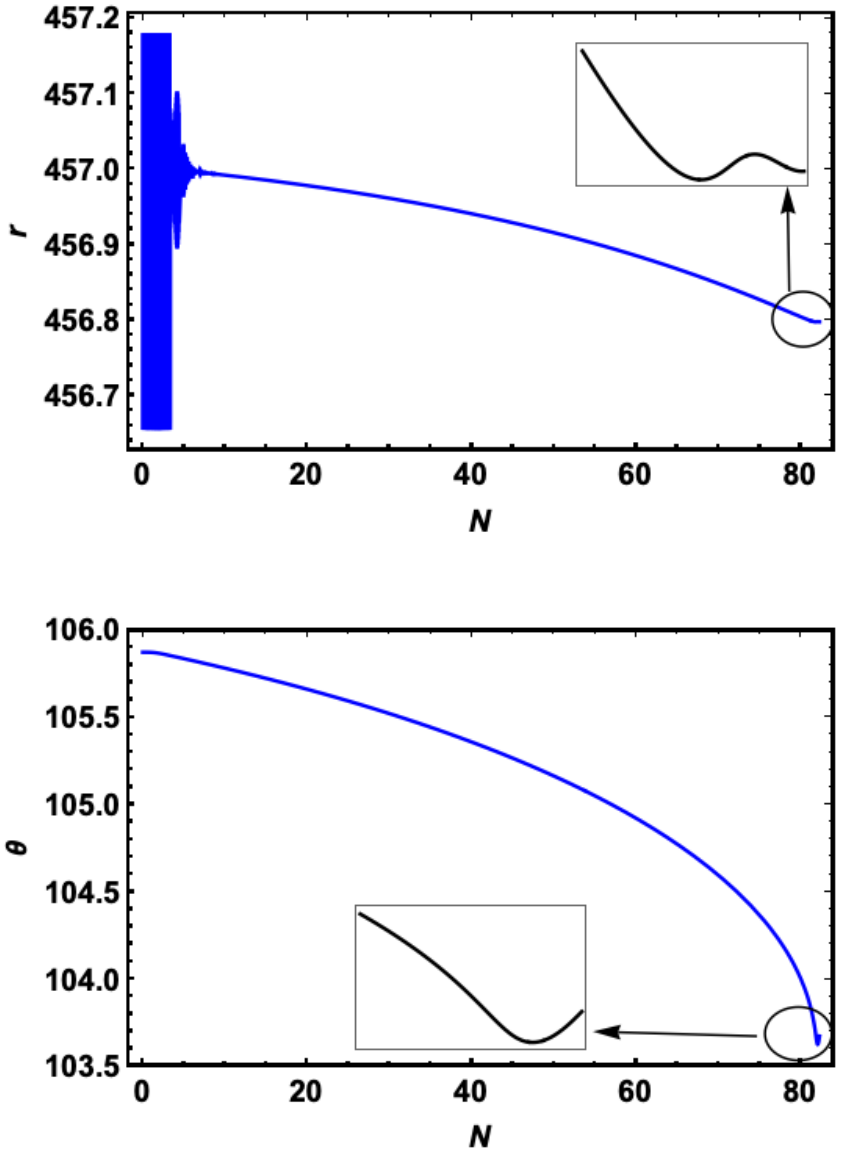

Figure: For $f = 7.07 M_{Pl}$

Cosmological prediction

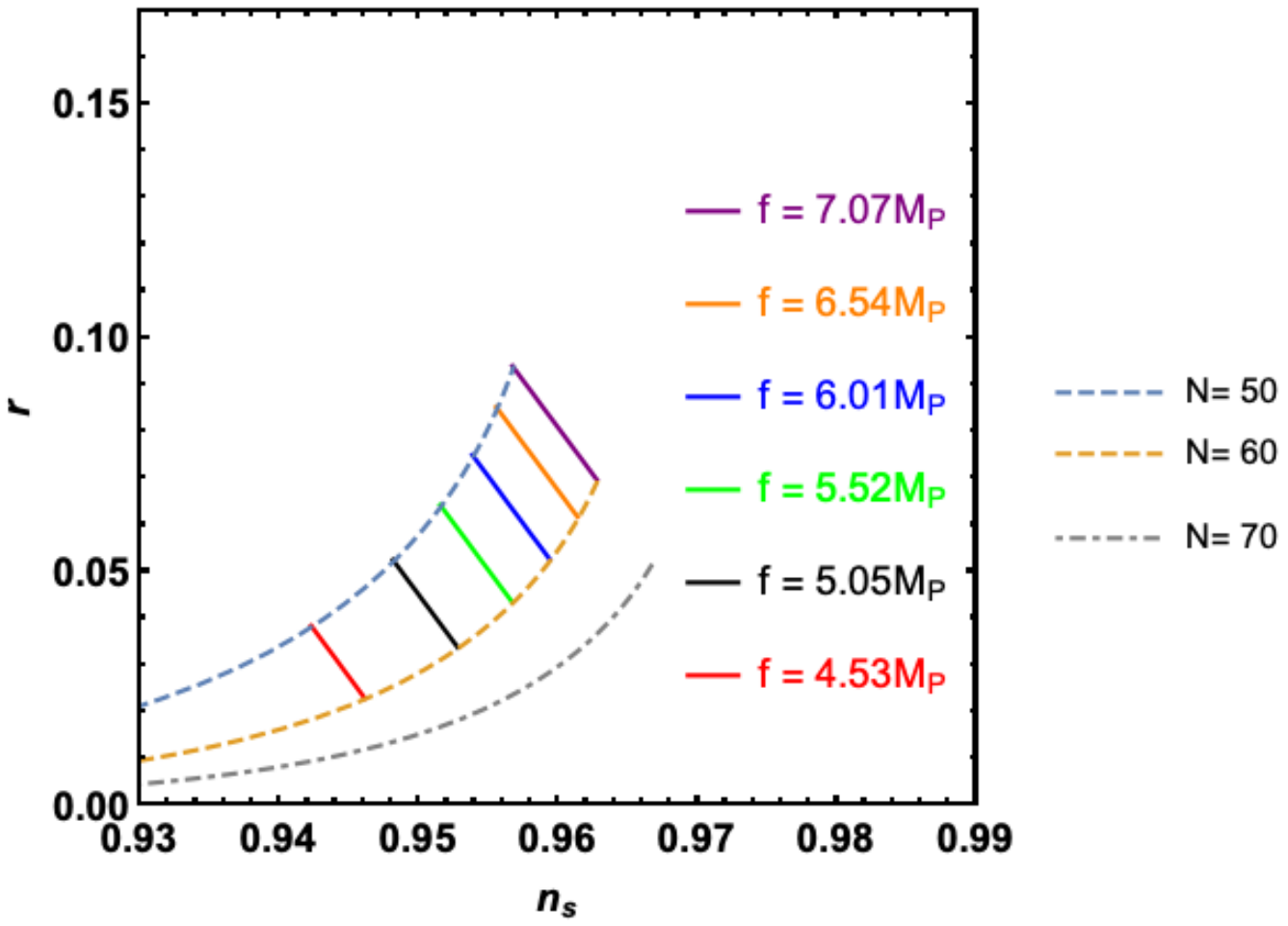

A Maharana, I Zavala PhysRevD 2018

Cosmological prediction

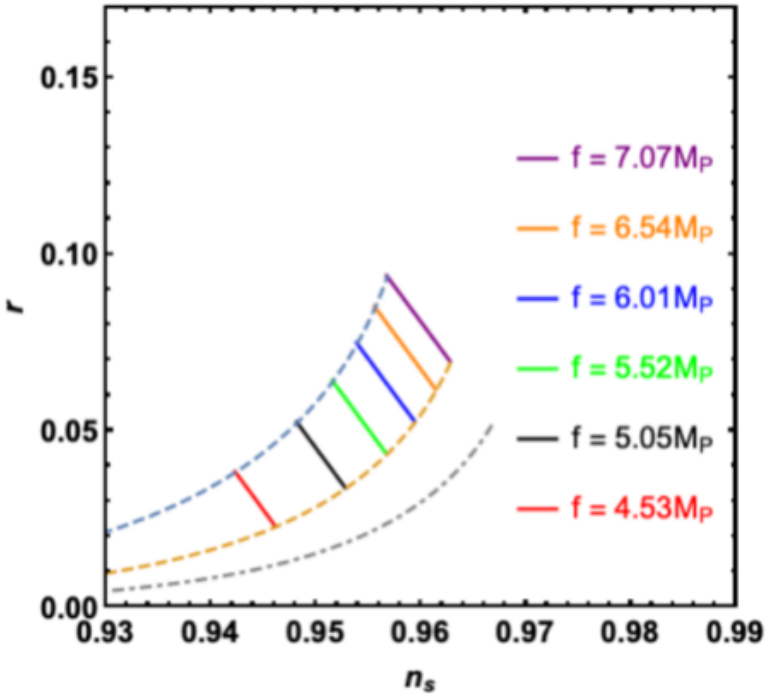

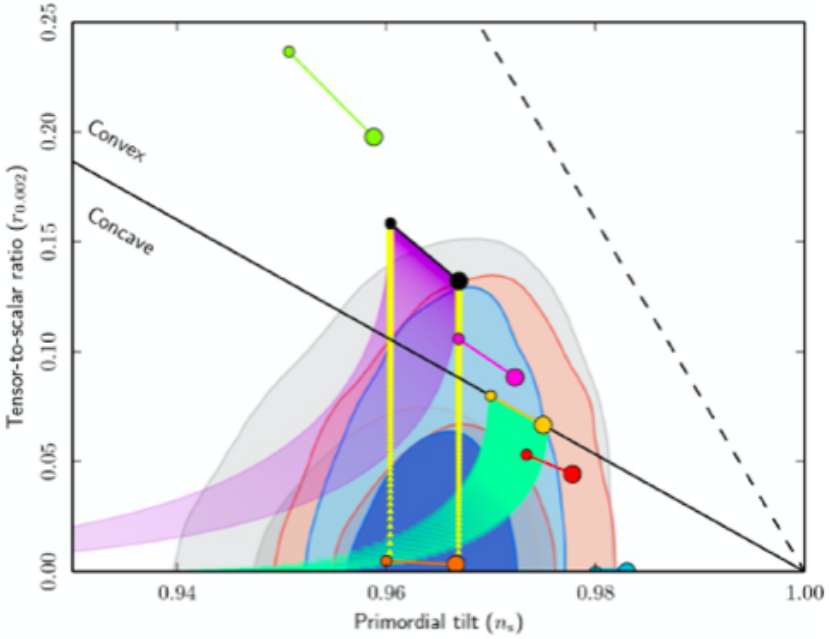

Planck 2018 results. X. Constraints on inflation 2018

Local Non-gaussianianity f_{NL}^{local}

Covariant formalism

$$f_{NL} = -\frac{5}{6}\frac{N^{,A}N^{,B}\mathcal{D}_A\mathcal{D}_B N}{(N_{,I}N^{,I})^2}$$

$$N_{,r} = \frac{N(r+\Delta r,\theta) - N(r-\Delta r,\theta)}{2\Delta r}$$

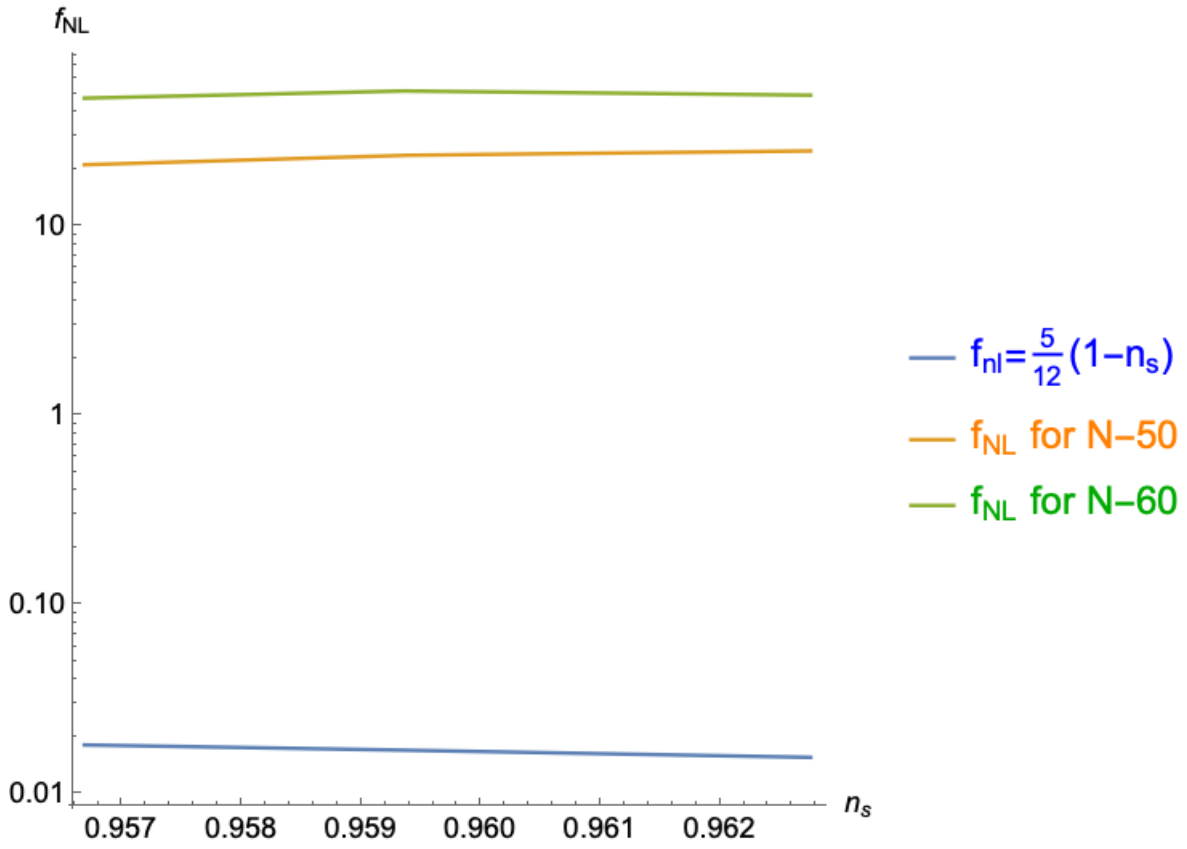

David I. Kaiser, Edward A. Mazenc, Evangelos I. Sfakianakis PhysRevD. 2013

Outside throat Double D-brane inflation

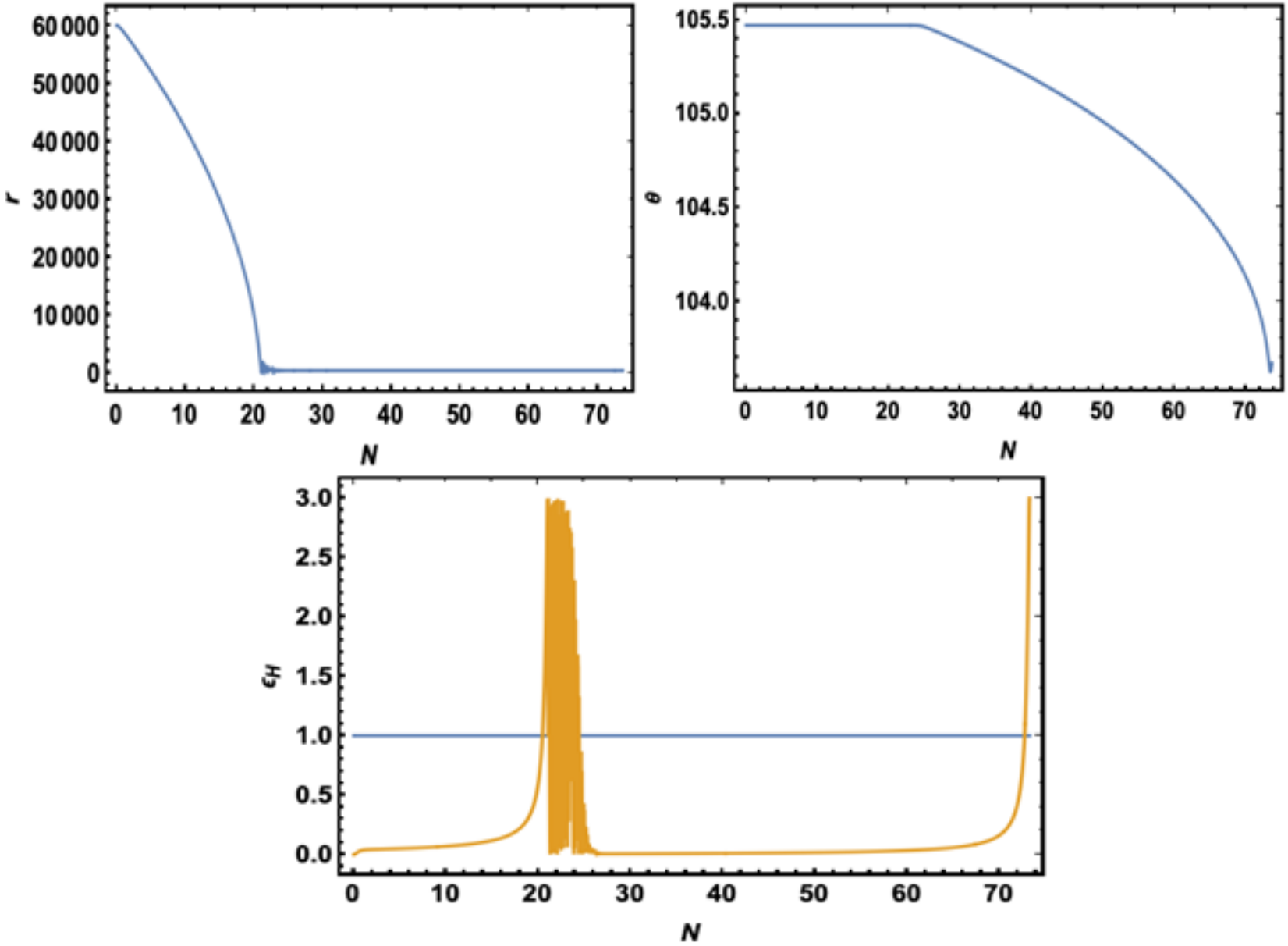

Turn rate

This multifield behaviour can be characterised using the following unit vectors, along and orthogonal, to the inflationary trajectory,

$$T^a \equiv \frac{\phi'^a}{|\phi'|}, \qquad N^a \equiv -\frac{T'^a}{|T'|}$$

together with the turning rate $\eta_\perp$, defined by

$$\eta_\perp = |T'^a|$$

A Achucarro, V Atal, M Kawasaki, F Takahashi 2015, A AChucarro, G Palma 2019

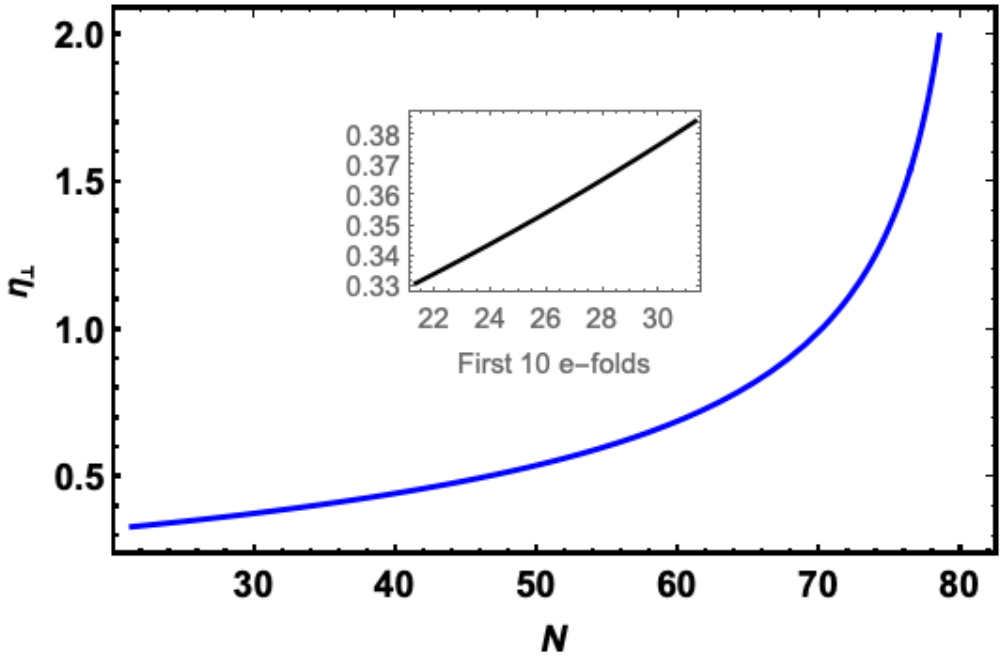

Figure: For $f = 7.07 M_{Pl}$

$\mathcal{R}$ of the field manifold

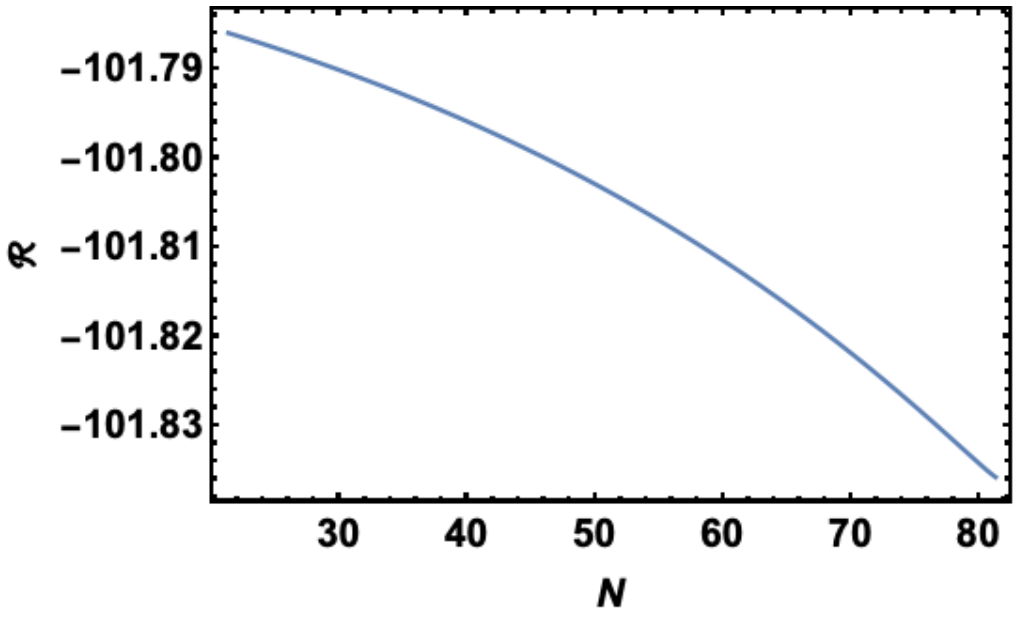

Figure: For $f = 7.07 M_{Pl}$

- **Effective mass-squared** of the **isocurvature** perturbation is given by,

$$m_{eff}^2 = N^a N^b \nabla_a \nabla_b V - 3\Omega^2 + \epsilon H^2 \mathcal{R}$$

- For $R < 0$ may give rise to geometrical destabilisation during inflation if $m_{eff}^2 < 0$

$\mathcal{R}$ of the field manifold

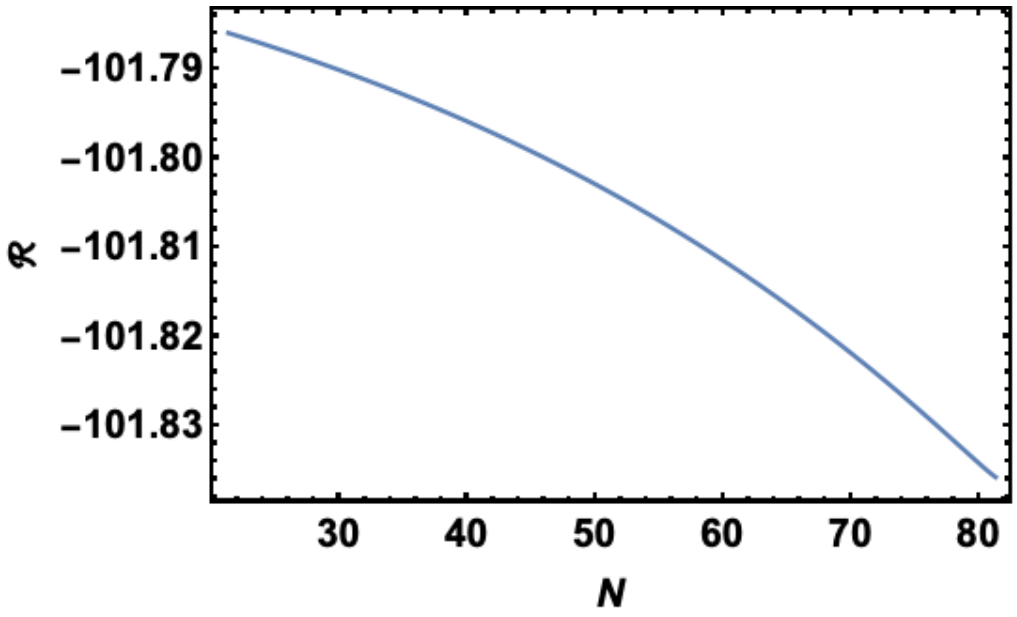

Figure: For $f = 7.07 M_{Pl}$

- **Effective mass-squared** of the **isocurvature** perturbation is given by,

$$m_{eff}^2 = N^a N^b \nabla_a \nabla_b V - 3\Omega^2 + \epsilon H^2 \mathcal{R}$$

- For $R < 0$ may give rise to geometrical destabilisation during inflation if $m_{eff}^2 < 0$, **but we don't have that!**

SR Petel, K Turzyński Phys. Rev. Lett. 2016

Conclusion:

- Inflation type: **Monomial like**, **Natural inflation**, **Double D-brane**
- **Warping**, brane flux q as well as **wrapping** helps to obtain **super-Planckian** decay constant f where having control over backreaction.
- We confirm that multifield behaviour is certain in our model contrary to **KT**


Thank you

Appendix 1:Moduli stabilisation

- This is an open string inflation, so we are assuming that all closed string moduli have been stabilised at their minima, decoupled form the WRC . They are not affecting the brane dynamics.
- RC has $h^{2,1} = 0$ and $h^{1,1} = 1$. The axio-dilaton can be stabilised by turning on $(3, 0)$-form fluxes which breaks $\mathcal{N} = 1$ SUSY.
- When the compact case is considered in RC, the bulk Calabi-Yau may have a different topology, allowing for $h^{2,1} > 0$, and so SUSY preserving primitive (2,1)-form fluxes may be turned on, stabilizing the additional complex-structure moduli and the axiodilaton.

Appendix 2: Backreaction of branes

- Ways to constrain the wrapping parameter p and brane flux q.

D5-brane can be used as a probe iff its contribution to the Einstein equation is much smaller than that of the stack of N D3-brane.

The traced Einstein equation is given by,

$$(T^m_m - T^\mu_\mu)^{\text{loc}} = (7-p)\, T_p \Delta^{(9-p)}(\Sigma_{p-3})$$

The condition of controlled backreaction using WRC metric is,

$$\frac{p}{2N}\frac{T_5}{T_3}\frac{\Delta^{(4)}(\Sigma_2)}{\Delta^{(6)}(\Sigma_0)} << 1 \quad \Rightarrow \quad p << \frac{12N(2\pi)^2\mathcal{H}^{-1/2}}{\sin\theta_1}\frac{l_s^2}{r^2}$$

K. Kooner, S. Parameshawaran, I Zavala Phys. Lett B 2016

- Backreaction due to D5 is smaller near the tip!

The constrain on q is,

$$\frac{T_5 \rho_3^{pq\ D5}}{T_3 \rho_3^{N\ D3}} << 1 \quad \Rightarrow \quad pq << \frac{T_3}{T_5}\frac{N}{\pi l_s^2 \sin\theta_1} = \frac{4\pi N}{\sin\theta_1}$$

- Large parameter space where these conditions can be satisfied, giving rise to a successful period of inflation.

S. Thomas, Z Kenton JHEP 2015

Appendix 3: Conifold

It is a cone over the base $T^{1,1} \sim S^2 \times S^3$, with singularity at the tip.

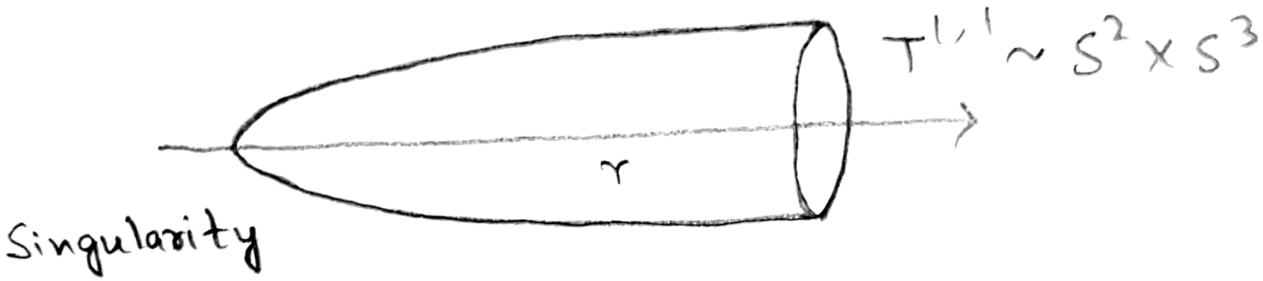

The resolved conifold is one of the two smooth versions of the non-compact Calabi-Yau three fold,