PARTICLENET:
Jet Tagging via Particle Clouds

Based on work with Loukas Gouskos
arXiv:1902.08570

Code available at https://github.com/hqucms/ParticleNet

BOOSTON 2019

Huilin Qu
UC Santa Barbara
July 23, 2019

Introduction

- Jet is one of the most ubiquitous objects at the LHC
  - probably also the most diverse and therefore fascinating one...
- Jet tagging: powerful tool for many new physics searches and standard model measurements
  - heavy flavour tagging (bottom/charm)
  - heavy resonance tagging (top/W/Z/Higgs)
  - quark/gluon tagging
  - ...
- The rise of machine learning (ML) has brought lots of new progresses to jet tagging
  - many new approaches and techniques has been proposed in the past few years, leading to significant improvement in performance and deeper insights into jet physics
- Still: *How to better represent a jet for ML?*

As Images…

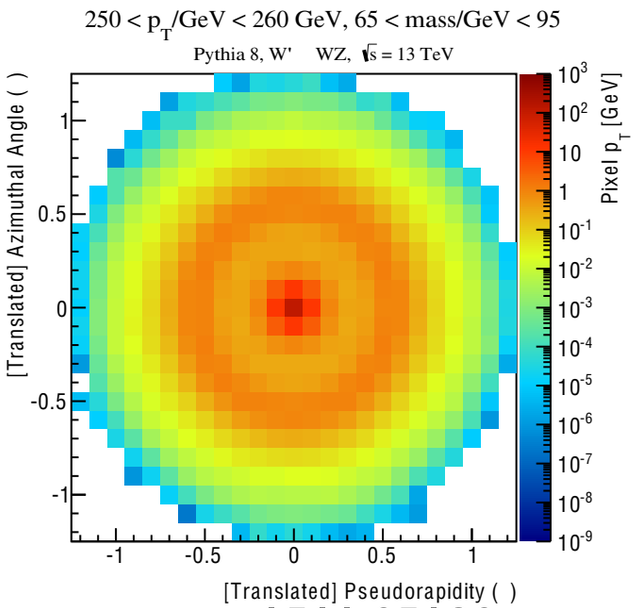

1511.05190

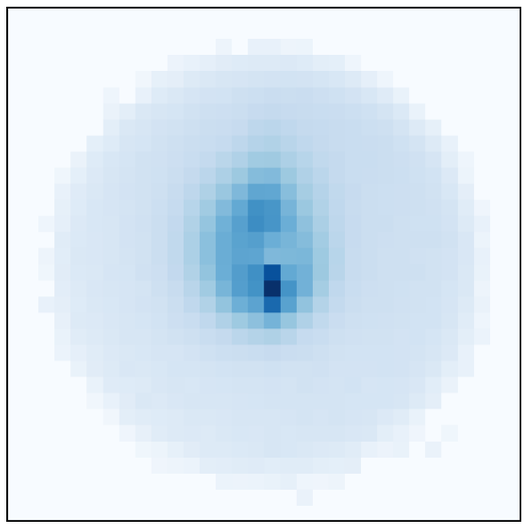

1603.09349

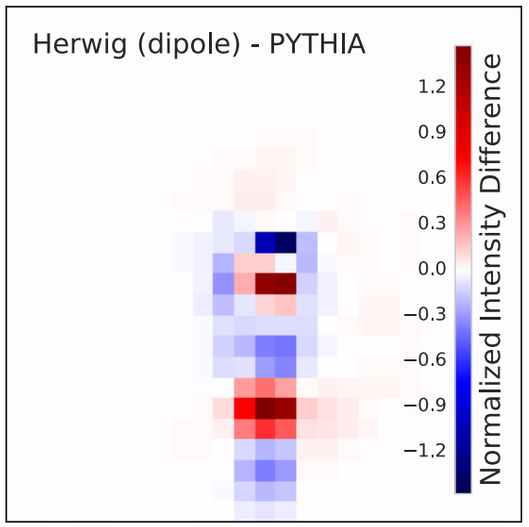

1609.00607

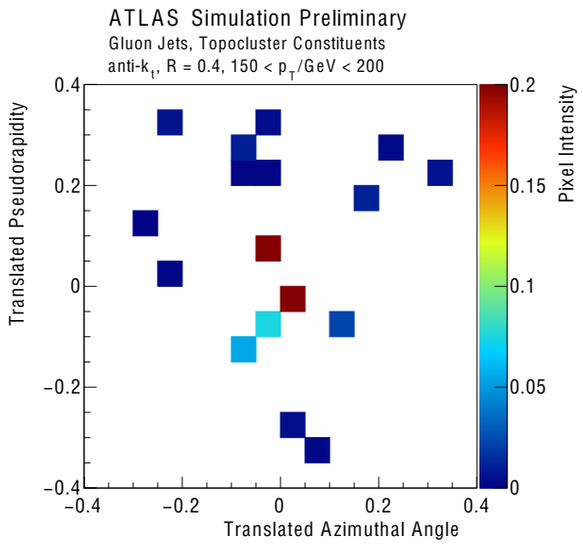

ATL-PHYS-PUB-2017-017

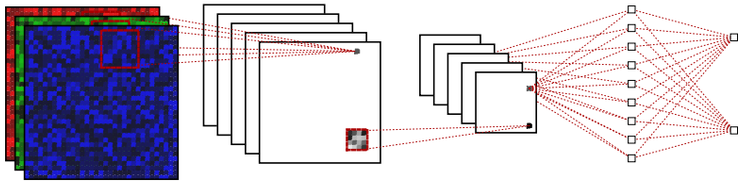

red = transverse momenta of charged particles

green = the transverse momenta of neutral particles

blue = charged particle multiplicity

1612.01551

1701.08784

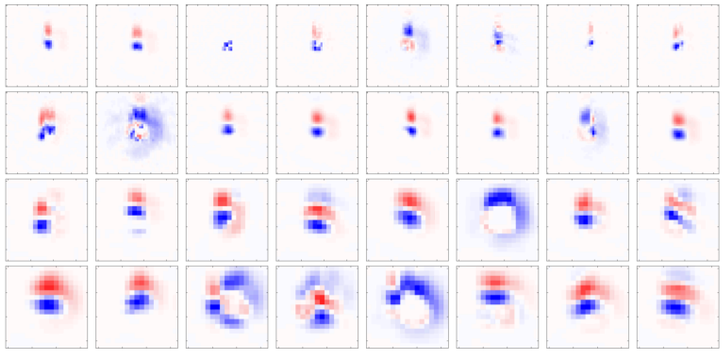

1803.00107

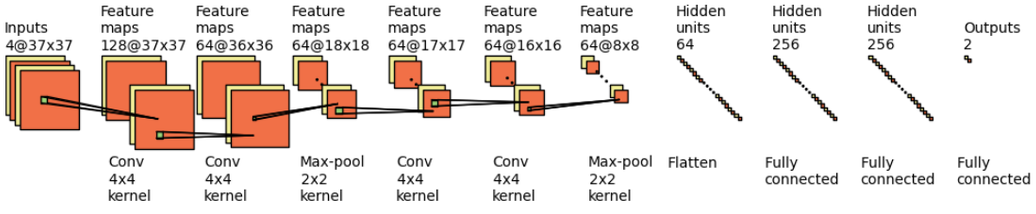

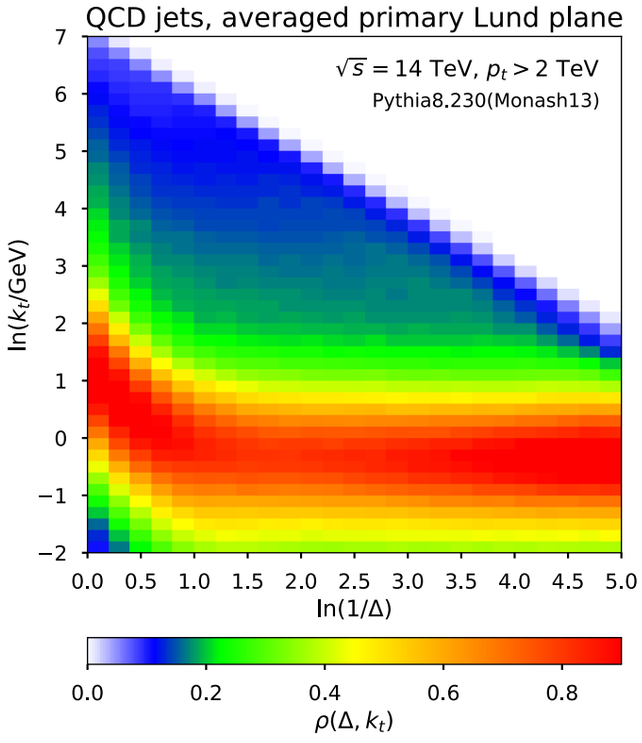

1807.04758

And more…

As Collections of Particles…

1607.08633

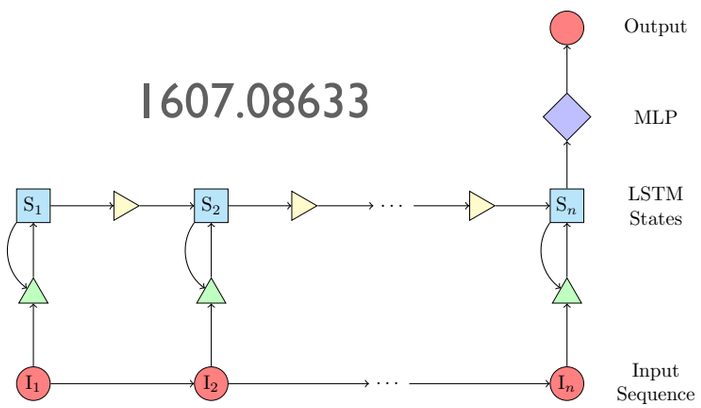

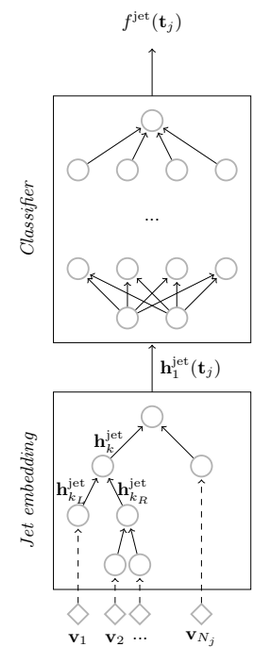

1702.00748

"DeepAK8"
CMS-PAS-JME-18-002

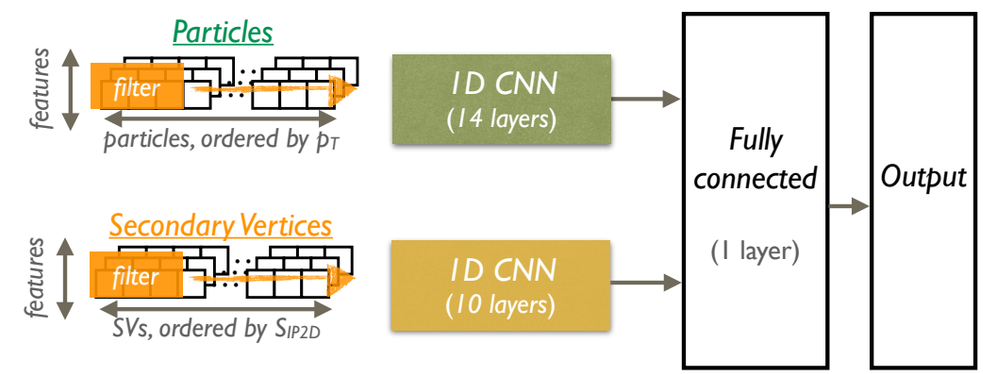

1711.09059

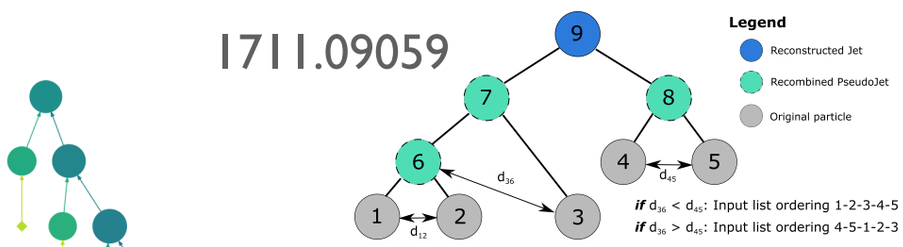

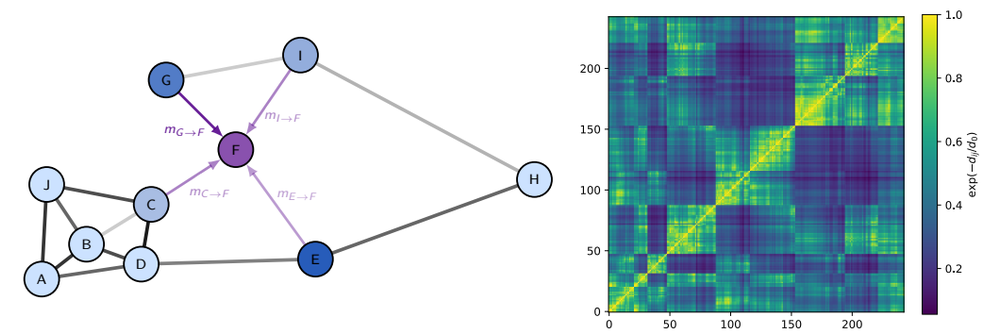

NIPS2017 workshop [http://bit.ly/2AkwYRG]

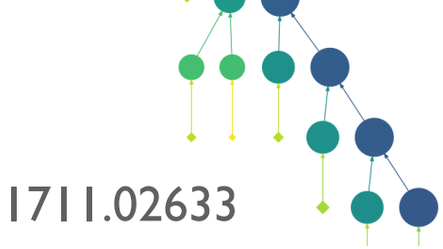

1711.02633

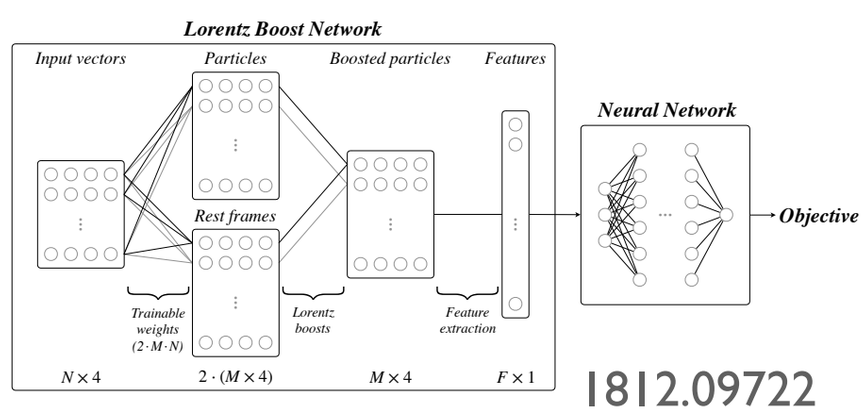

1812.09722

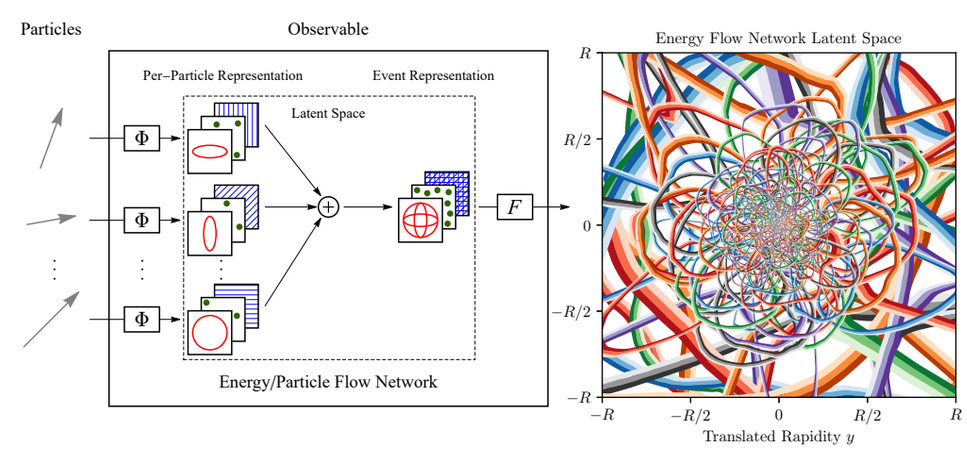

1810.05165

$$k_{\mu,i} \xrightarrow{\text{CoLa}} \tilde{k}_{\mu,j} = k_{\mu,i}\, C_{ij}$$

$$\text{with} \quad C = \begin{pmatrix} 1 & 1 & \cdots & 0 & \chi_1 & \cdots & 0 & C_{1,N+2} & \cdots & C_{1,M} \\ \vdots & & \ddots & & & \ddots & & \vdots & \ddots & \vdots \\ 1 & 0 & \cdots & 1 & 0 & \cdots & \chi_N & C_{N,N+2} & \cdots & C_{N,M} \end{pmatrix} . \quad \tilde{k}_j \xrightarrow{\text{LoLa}} \hat{k}_j = \begin{pmatrix} m^2(\tilde{k}_j) \\ p_T(\tilde{k}_j) \\ p_T(\tilde{k}_j)\Delta R_{j,\text{jet}} \\ w^{(E)}_{jm}\, E(\tilde{k}_m) \\ w^{(d)}_{jm}\, d^2_{jm} \\ E_T(\tilde{k}_j)E_T(\tilde{k}_m)(\Delta R_{jm})^{0.2} \end{pmatrix},$$

1707.08966, 1812.09223

And more…

As… Point Clouds?

Image from https://news.voyage.auto/an-introduction-to-lidar-the-key-self-driving-car-sensor-a7e405590cff

As… Point Clouds?

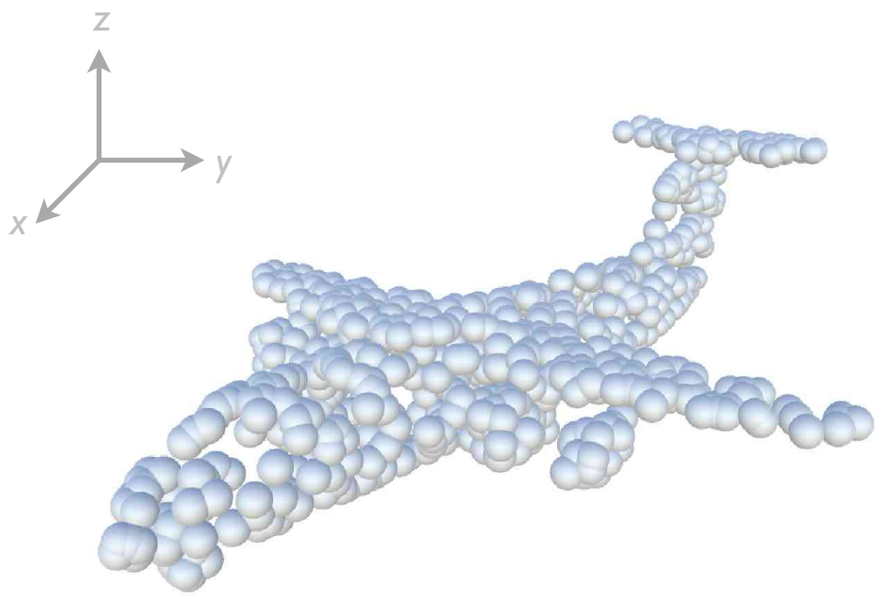

Point cloud

From Wikipedia, the free encyclopedia

A **point cloud** is a set of data points in space. Point clouds are generally produced by 3D scanners, which measure a large number of points on the external surfaces of objects around them.

As… Point Clouds?

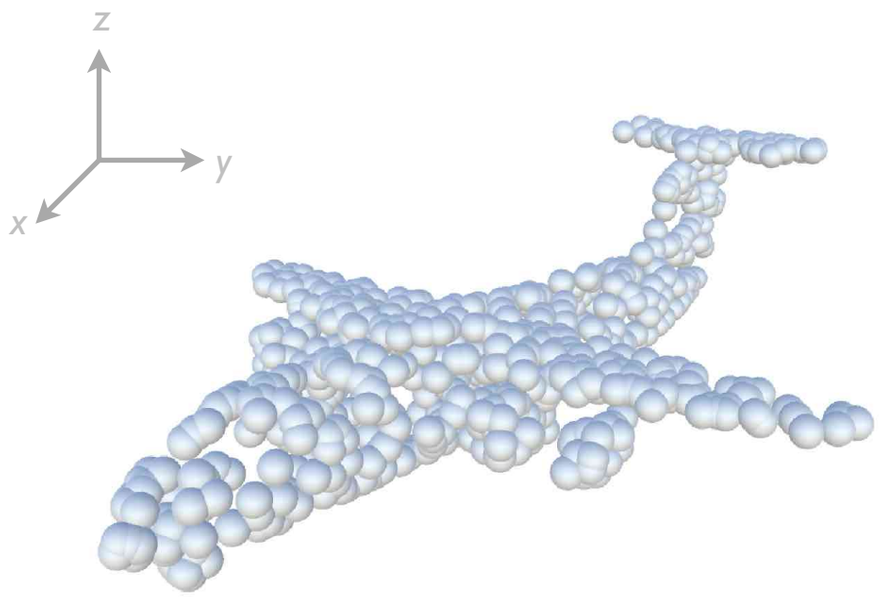

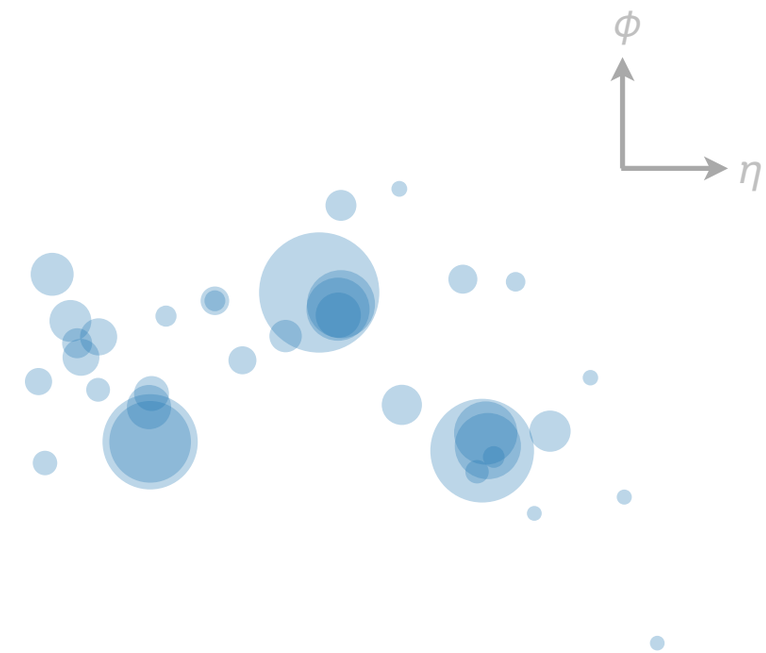

Point cloud

From Wikipedia, the free encyclopedia

A **point cloud** is a set of data points in space. Point clouds are generally produced by 3D scanners, which measure a large number of points on the external surfaces of objects around them.

Jet (Particle cloud)

From Wikipedia, the free encyclopedia

A **jet (particle cloud)** is a set of particles in space. Particle clouds are generally created by clustering a large number of particles measured by particle detectors, e.g., ATLAS EXPERIMENT and CMS.

Point vs Particle Clouds

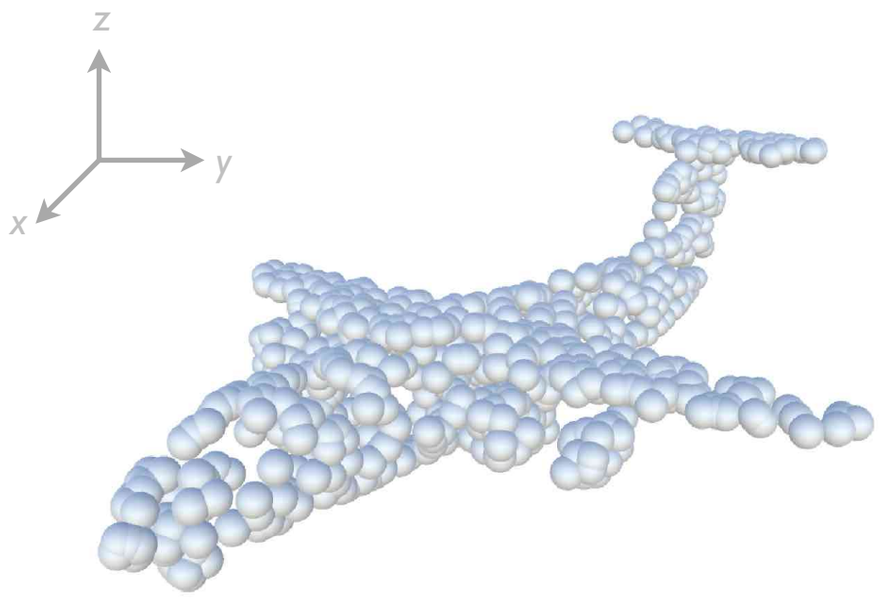

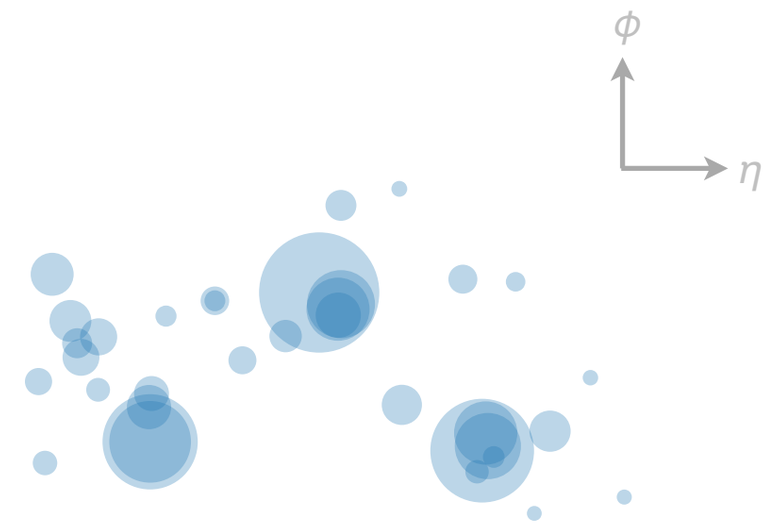

- Point cloud
  - points are intrinsically *unordered*
  - primary information:
    - 3D coordinates in the xyz space

- Particle cloud
  - particles are intrinsically *unordered*
  - primary information:
    - 2D coordinates in the η-ϕ space
  - *but also many additional features!*
    - energy/momenta
    - charge/particle ID
    - track quality/impact parameters/etc.

Why Particle Cloud?

- Image-based approaches
  - natural idea for calorimeters
  - powerful performance using convolutional neural networks (CNNs)
  - projecting particles into pixels leads to high sparsity and loss of information
  - difficult to include non-additive features (e.g., particle ID, track impact parameters)
- Particle-based approaches
  - preserves full granularity - no loss of information from pixelation
  - straightforward to include any kind of features for each particle
  - constituent particles of a jet are intrinsically unordered — permutation symmetry!
  - however, most particle-based approaches (RNN/TreeNN/1D CNN) failed to exploit this symmetry
- The particle cloud approach
  - also particle-based
  - builds on permutation symmetry from the beginning

Learning from Particle Clouds

- Learning from point clouds
  - active research area in the ML community, mainly due to the rise of interest in autonomous driving
  - methods for point clouds can be imported and improved for particle clouds
- The key is to exploit the permutation symmetry
  - one approach: Energy Flow Network / Particle Flow Network [arXiv:1810.05165]
    - per-particle transformations + symmetric global function

$$\mathcal{O}(\{p_1, \ldots, p_M\}) = F\left(\sum_{i=1}^{M} \Phi(p_i)\right),$$

    - generally, any permutation-invariant functions can be approximated with this form [Deep Sets, arXiv:1703.06114]
    - not explicitly exploiting the local structure of particle clouds
  - our approach:
    - exploit both the local and global structures of particle clouds explicitly
      - convolution operation is the best candidate
    - use permutation-invariant convolution designed for point clouds

Convolution on Point Clouds

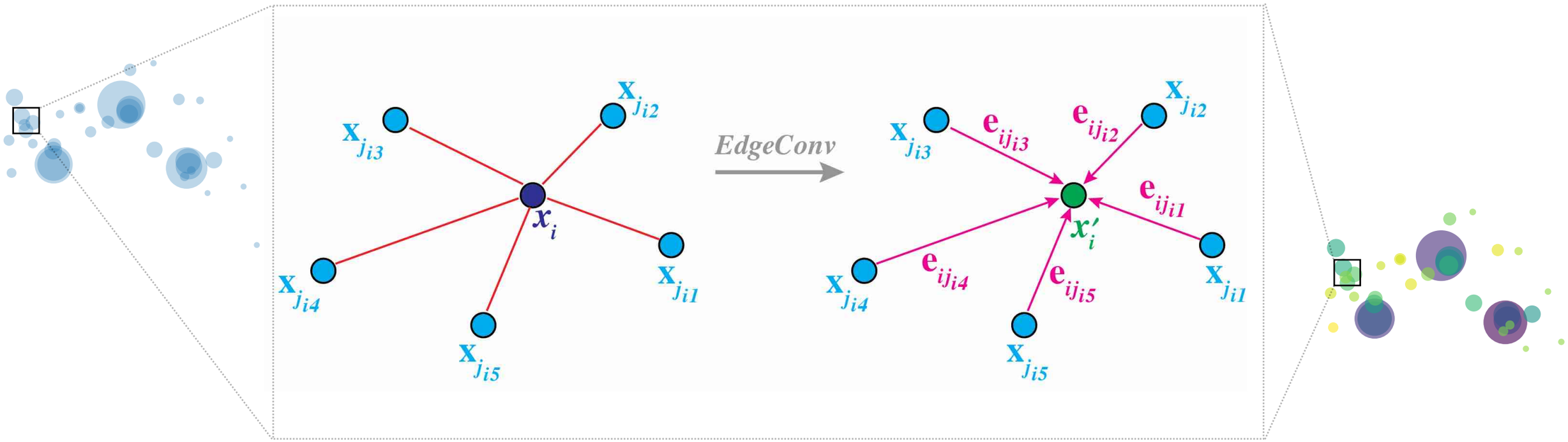

- Convolution on point clouds: *EdgeConv* [arXiv:1801.07829]
  - treating a point cloud as a graph: each point is a vertex
  - for each point, a local patch is defined by finding its k-nearest neighbors
  - designing a symmetric "convolution" function
    - define "edge feature" for each center-neighbor pair: $e_{ij} = h_\Theta(x_i, x_j)$
      - same h_Θ for all neighbor points, and all center points, for symmetry
    - aggregate the edge features in a symmetric way: $x_i' = \mathrm{mean}_j\, e_{ij}$

Dynamic Graph CNN

- *EdgeConv* shares many nice properties of regular CNNs
  - incorporates local neighborhood information
  - EdgeConv layers can be stacked to allow the network to learn both the local and global structures in a hierarchical manner
- Dynamic Graph CNN (DGCNN) [arXiv:1801.07829]
  - an EdgeConv operation outputs a set of learned features for each point
  - these features can also be interpreted as "coordinates" for each point (in a high-dim latent space)
  - such an interpretation enables us to recompute the "distances" between points and therefore dynamically update the k-nearest neighbor relations as going from one EdgeConv layer to another
  - found to be beneficial in the original paper

THE PARTICLENET ARCHITECTURE

- Based on EdgeConv and DGCNN, we developed ParticleNet, a customized architecture for jet tagging on particle clouds

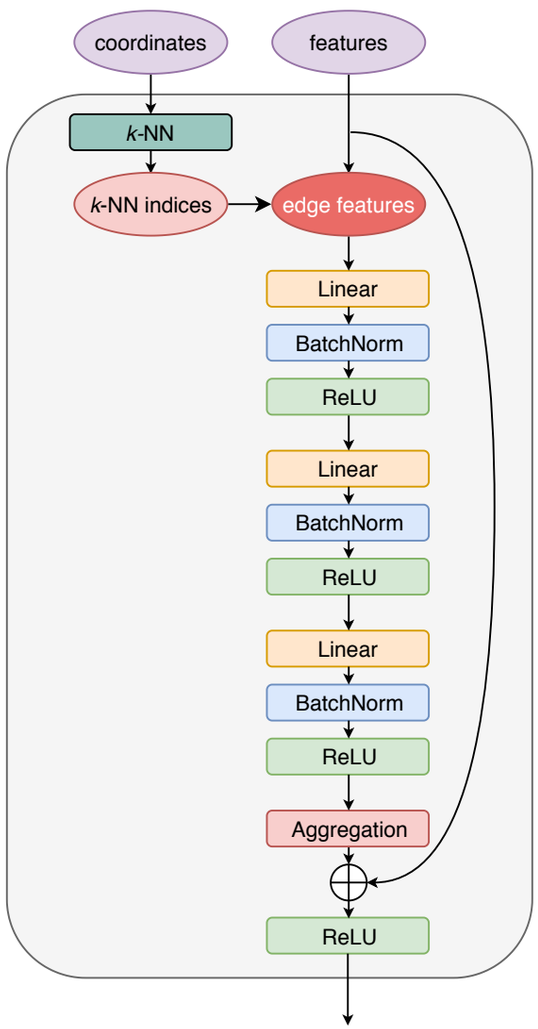

EdgeConv block

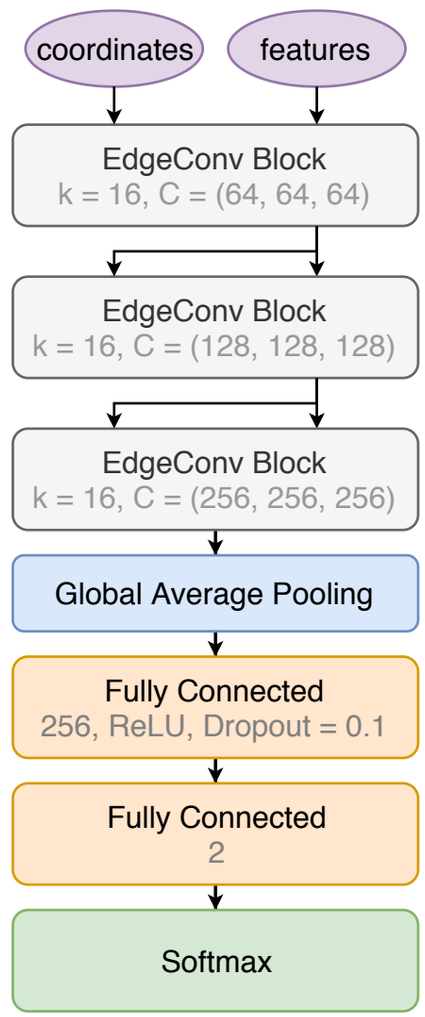

ParticleNet architecture

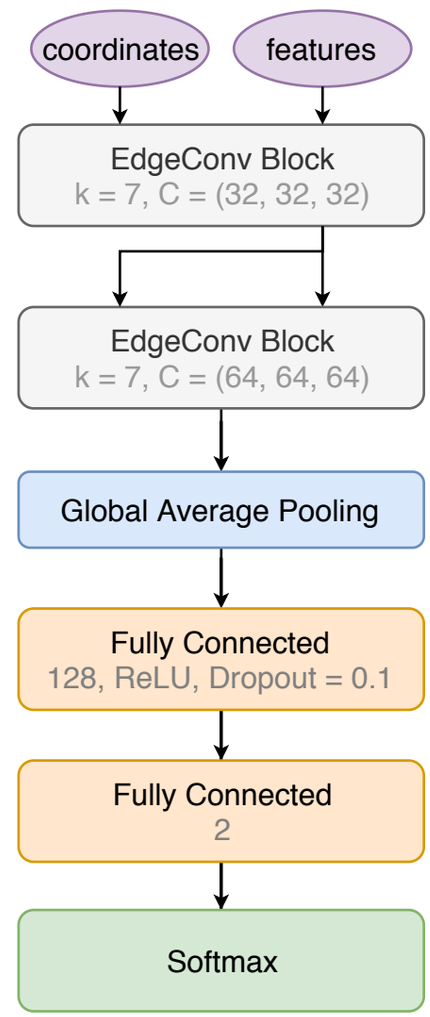

ParticleNet-Lite

Performance Comparison

- The performance of ParticleNet is benchmarked on two jet tagging tasks using public datasets:
  - top tagging dataset: A. Butter, G. Kasieczka, T. Plehn and M. Russell [arXiv:1707.08966, link]
  - quark/gluon tagging dataset: P. T. Komiske, E. M. Metodiev and J. Thaler [arXiv:1810.05165, link]
- Results compared with a few alternative algorithms
  - 1D CNN over particle sequence (P-CNN)
    - i.e., the CMS "DeepAK8" architecture [CMS-PAS-JME-18-002]
    - but using only information available in the datasets (e.g., no tracking)
  - 2D CNN over 64x64 jet image
    - state-of-the-art model for image recognition: ResNeXt-50 [arXiv:1611.05431]
    - #filters reduced by a factor or 4 to avoid overfitting and also to speed up training
  - Particle Flow Network (PFN) [arXiv:1810.05165]
    - not retrained — results are the ones reported in the original paper

PERFORMANCE: TOP TAGGING

- Top tagging:
  - only four-momenta of the particles available in this dataset
- Metrics:
  - accuracy / area under the ROC curve (AUC)
  - background rejection ($1/\varepsilon_b$) at signal efficiency of 30% and 50%
    - more relevant to physics analysis
- Results:
  - substantial improvement over P-CNN/PFN
    - ~2x background rejection
  - >40% better than ResNeXt-50

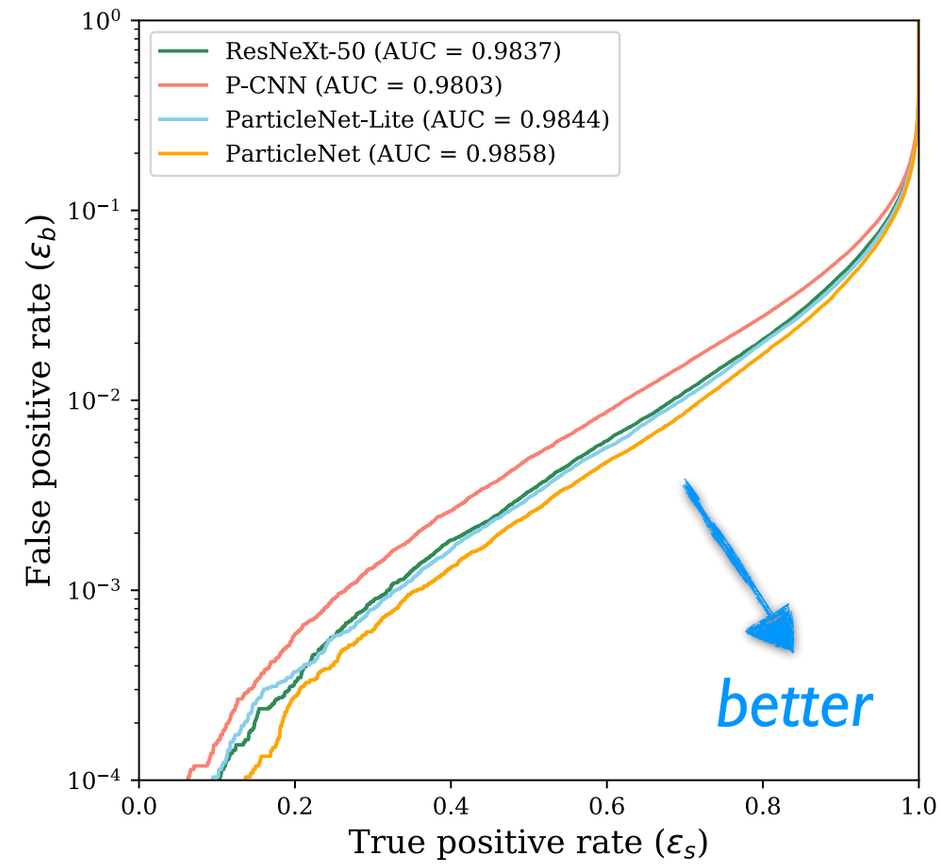

	Accuracy	AUC	$1/\varepsilon_b$ at $\varepsilon_s = 50\%$	$1/\varepsilon_b$ at $\varepsilon_s = 30\%$
ResNeXt-50	0.936	0.9837	302 ± 5	1147 ± 58
P-CNN	0.930	0.9803	201 ± 4	759 ± 24
PFN	-	0.9819	247 ± 3	888 ± 17
ParticleNet-Lite	0.937	0.9844	325 ± 5	1262 ± 49
ParticleNet	**0.940**	**0.9858**	$\mathbf{397 \pm 7}$	$\mathbf{1615 \pm 93}$

Top Tagging Comparison

- First direct comparison of a large number of ML algorithms on jet tagging, thanks to the public dataset prepared by G. Kasieczka et al.

More in S. Macaluso's talk

	AUC	Acc	$1/\epsilon_B$ ($\epsilon_S = 0.3$) single	mean	median	#Param
CNN [16]	0.981	0.930	914±14	995±15	975±18	610k
ResNeXt [30]	0.984	0.936	1122±47	1270±28	1286±31	1.46M
TopoDNN [18]	0.972	0.916	295±5	382± 5	378 ± 8	59k
Multi-body N-subjettiness 6 [24]	0.979	0.922	792±18	798±12	808±13	57k
Multi-body N-subjettiness 8 [24]	0.981	0.929	867±15	918±20	926±18	58k
TreeNiN [43]	0.982	0.933	1025±11	1202±23	1188±24	34k
P-CNN	0.980	0.930	732±24	845±13	834±14	348k
v1 ParticleNet [47]	0.985	0.938	1298±46	1412±45	1393±41	498k
LBN [19]	0.981	0.931	836±17	859±67	966±20	705k
LoLa [22]	0.980	0.929	722±17	768±11	765±11	127k
Energy Flow Polynomials [21]	0.980	0.932	384			1k
Energy Flow Network [23]	0.979	0.927	633±31	729±13	726±11	82k
Particle Flow Network [23]	0.982	0.932	891±18	1063±21	1052±29	82k
GoaT	0.985	0.939	1368±140		1549±208	35k
New *ParticleNet-Lite*	0.984	0.937	1262±49			26k
New *ParticleNet*	0.986	0.940	1615±93			366k

Ensemble of all taggers

arXiv:1902.09914

PERFORMANCE: QUARK/GLUON TAGGING

- Quark/gluon tagging
  - two versions with different information:
    - 4-momentum only
    - 4-momentum + particle ID
- Results
  - best performance obtained with ParticleNet in both cases (w/ and w/o PID)
  - addition of PID inputs has a large impact on the performance

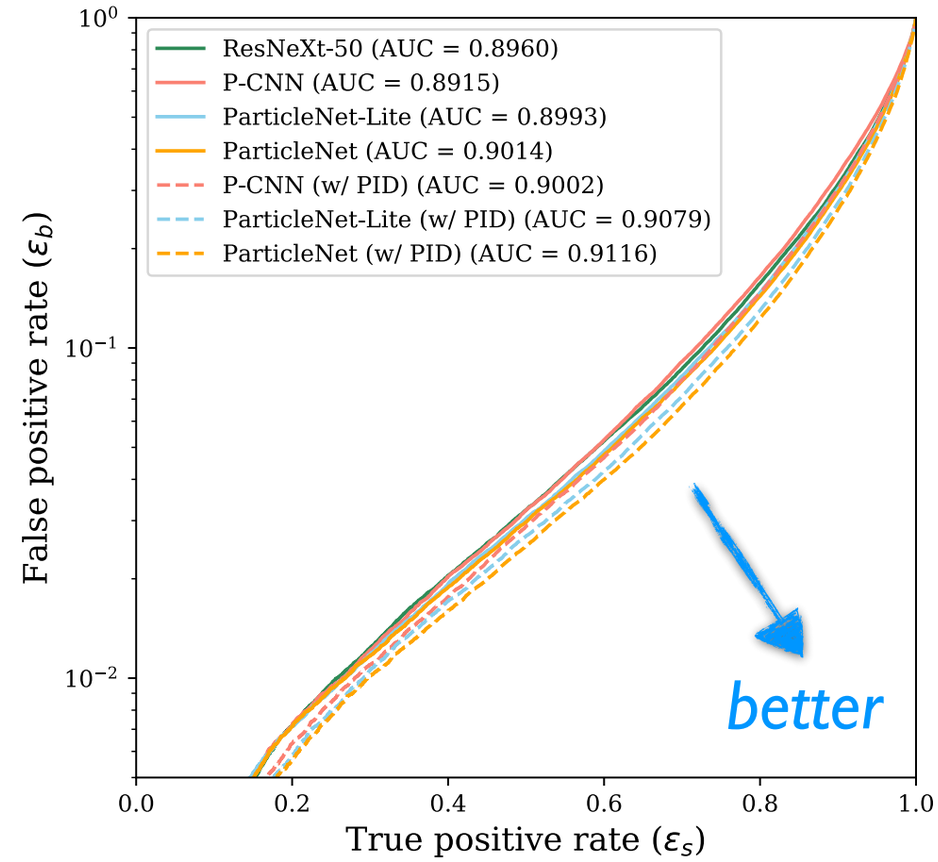

	Accuracy	AUC	$1/\varepsilon_b$ at $\varepsilon_s = 50\%$	$1/\varepsilon_b$ at $\varepsilon_s = 30\%$
ResNeXt-50	0.821	0.8960	30.9	80.8
P-CNN	0.818	0.8915	31.0	82.3
PFN	-	0.8911 ± 0.0008	30.8 ± 0.4	-
ParticleNet-Lite	0.826	0.8993	32.8	84.6
ParticleNet	0.828	0.9014	33.7	85.4
P-CNN (w/ PID)	0.827	0.9002	34.7	91.0
PFN-Ex (w/ PID)	-	0.9005 ± 0.0003	34.7 ± 0.4	-
ParticleNet-Lite (w/ PID)	0.835	0.9079	37.1	94.5
ParticleNet (w/ PID)	**0.840**	**0.9116**	$\mathbf{39.8 \pm 0.2}$	$\mathbf{98.6 \pm 1.3}$

Model Complexity

- Another aspect of machine learning models is the complexity
  - number of parameters
  - computational cost (e.g., inference time)
- The high performance of ParticleNet comes at the cost of speed
  - ~10x slower than P-CNN/PFN — but not prohibitively slow
  - also: current implementation of EdgeConv not as optimized as regular convolutions
- Good balance between performance and speed for ParticleNet-Lite
  - 40% improvement in performance
  - only a few times slower than P-CNN/PFN
- PFN: extremely fast and still good performing
  - suitable for extremely time critical tasks

	Parameters	Time (CPU) [ms]	Time (GPU) [ms]	$1/\varepsilon_b$ at $\varepsilon_s = 30\%$
ResNeXt-50	1.46M	7.4	0.22	1147 ± 58
P-CNN	348k	1.6	0.020	759 ± 24
PFN	82k	**0.8**	**0.018**	888 ± 17
ParticleNet-Lite	**26k**	2.4	0.084	1262 ± 49
ParticleNet	366k	23	0.92	$\mathbf{1615 \pm 93}$

SUMMARY

- Particle cloud: new approach to represent jets for ML
  - inspired by point clouds, a jet can be viewed as a cloud of particles, with manifest permutation symmetry
- ParticleNet: custom neural network architecture for jet tagging using particle clouds
  - significantly improved performance compared to existing ML approaches
- Particle cloud provides a natural and flexible representation for jets as well as the whole collision events, with a lot of potential yet to be fully explored
  - particle cloud classification (labelling the whole cloud) -> jet tagging
  - particle cloud segmentation (labelling each point) -> jet grooming / pileup identification?
  - and more... ?

Backups

Comparison with V1

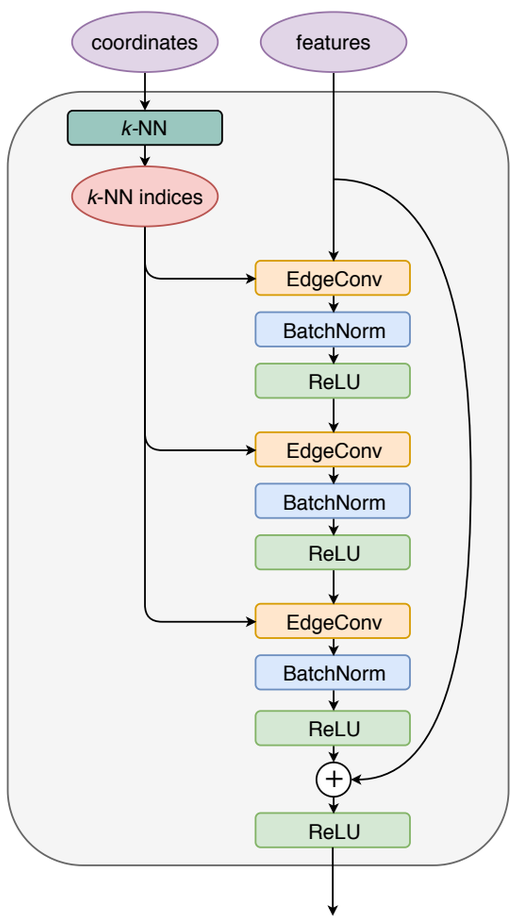

v1

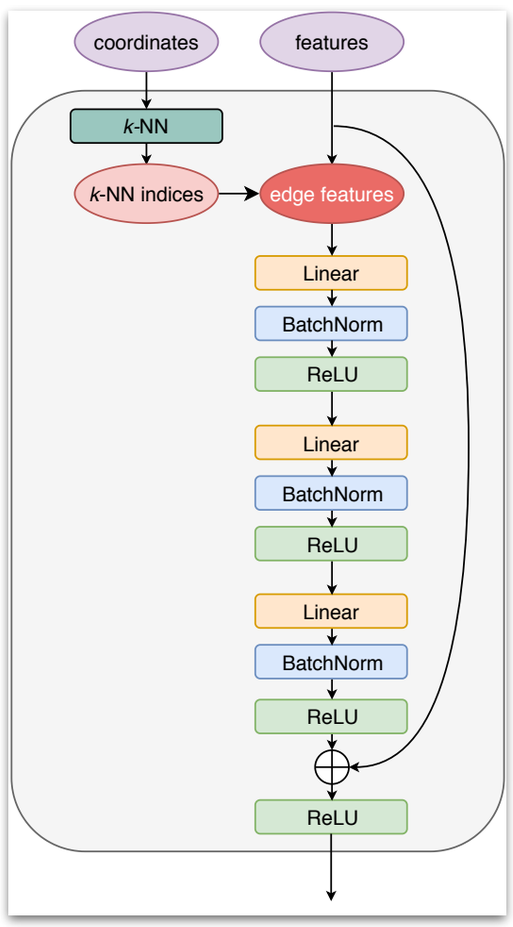

v2

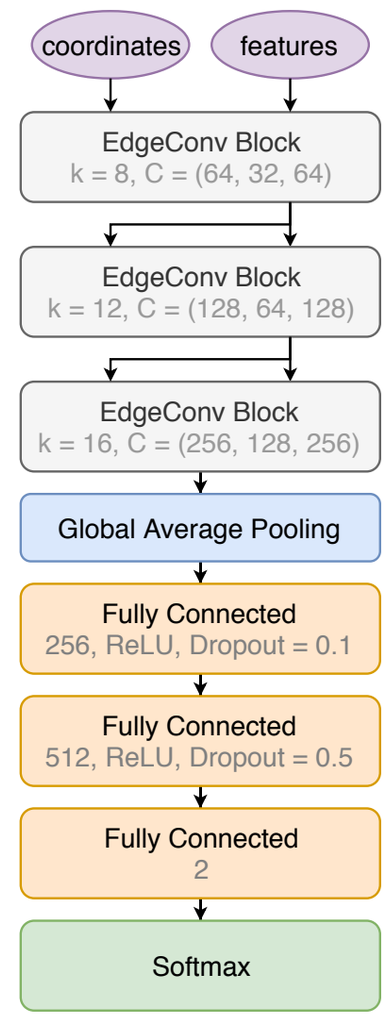

v1

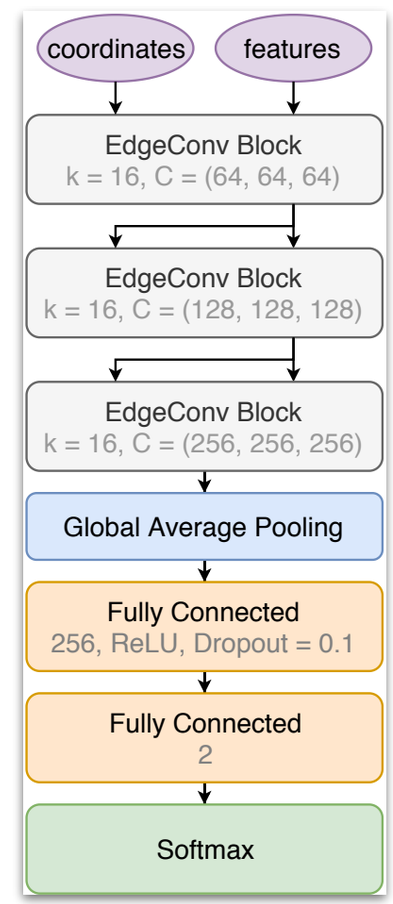

v2

DGCNN

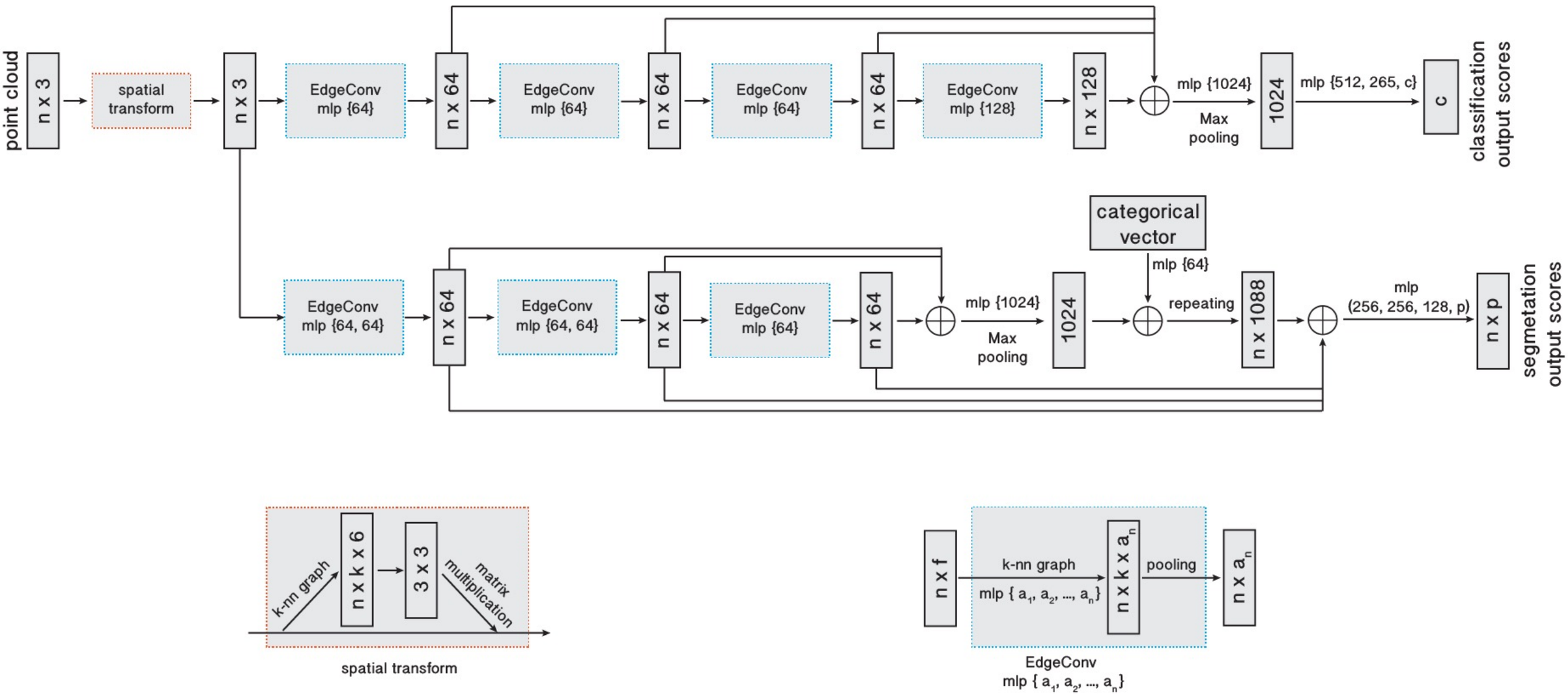

ParticleNet: Je

Input Variables

Variable	Definition	TOP	QG	QG-PID
$\Delta\eta$	difference in pseudorapidity between the particle and the jet axis	x	x	x
$\Delta\phi$	difference in azimuthal angle between the particle and the jet axis	x	x	x
$\log p_T$	logarithm of the particle's p_T	x	x	x
$\log E$	logarithm of the particle's energy	x	x	x
$\log \frac{p_T}{p_T(\text{jet})}$	logarithm of the particle's p_T relative to the jet p_T	x	x	x
$\log \frac{E}{E(\text{jet})}$	logarithm of the particle's energy relative to the jet energy	x	x	x
ΔR	angular separation between the particle and the jet axis ($\sqrt{(\Delta\eta)^2 + (\Delta\phi)^2}$)	x	x	x
q	electric charge of the particle			x
`isElectron`	if the particle is an electron			x
`isMuon`	if the particle is a muon			x
`isChargedHadron`	if the particle is a charged hadron			x
`isNeutralHadron`	if the particle is a neutral hadron			x
`isPhoton`	if the particle is a photon			x

Convolution on Regular Grids

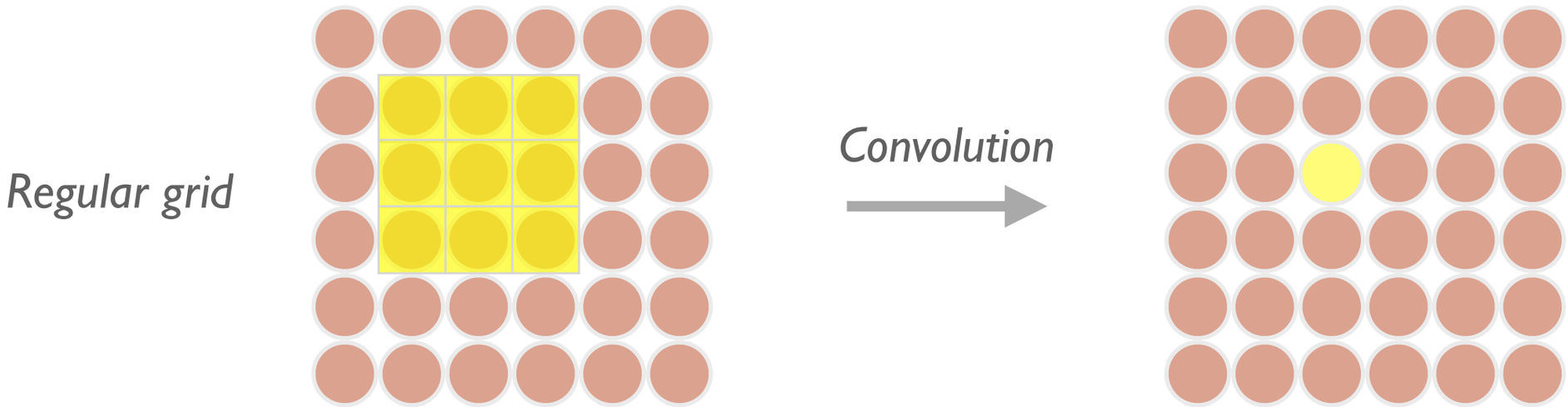

- Conventional convolution only operates on regular grids and cannot be applied on point clouds
  - point clouds are irregular
    - how to define a "local" patch?
  - point clouds are unordered
    - conventional convolution operation ($\Sigma_i K_i x_i$) is not invariant under permutation of the points (x_i)