Session 5

Application Oriented Research High Average Current

Review of requirements and challenges

C. Hernandez-Garcia, S. Benson, R. Suleiman

Jefferson Lab, Newport News, VA 23606, USA

E. Wang, J. Smedley

Brookhaven National Laboratory, Upton, NY 11973, USA

CERNCOURIER | International journal of high-energy physics

FEATURE

Electron–ion collider on the horizon

28 September 2018

The National Academy of Sciences in the US finds a compelling scientific case for an advanced collider that would reveal how visible matter emerges from fundamental quarks and gluons.

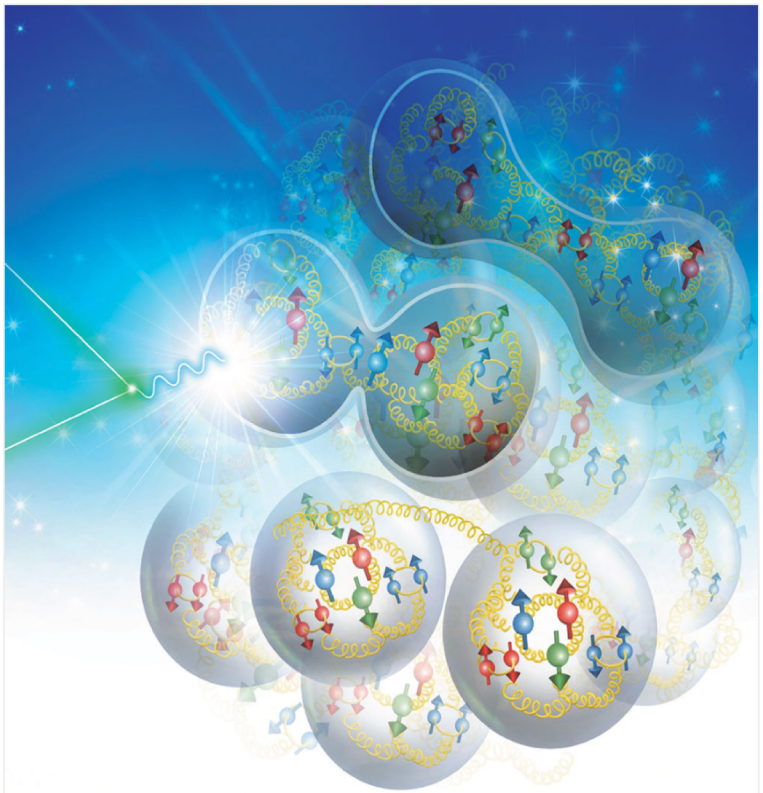

Protons and neutrons, the building blocks of nuclear matter, constitute about 99.9% of the mass of all visible matter in the universe. In contrast to more familiar atomic and molecular matter, nuclear matter is also inherently complex because the interactions and structures in nuclear matter are inextricably mixed up: its constituent quarks are bound by gluons that also bind themselves. Consequently, the observed properties of nucleons and nuclei, such as their mass and spin, emerge from a complex, dynamical system governed by quantum chromodynamics (QCD). The quark masses, generated via the Higgs mechanism, only account for a tiny fraction of the mass of a proton, leaving fundamental questions about the role of

Gold Suppliers

Latest Articles

Two proposed machine designs for an EIC build on existing U.S. accelerator facilities with some of the required elements in place.

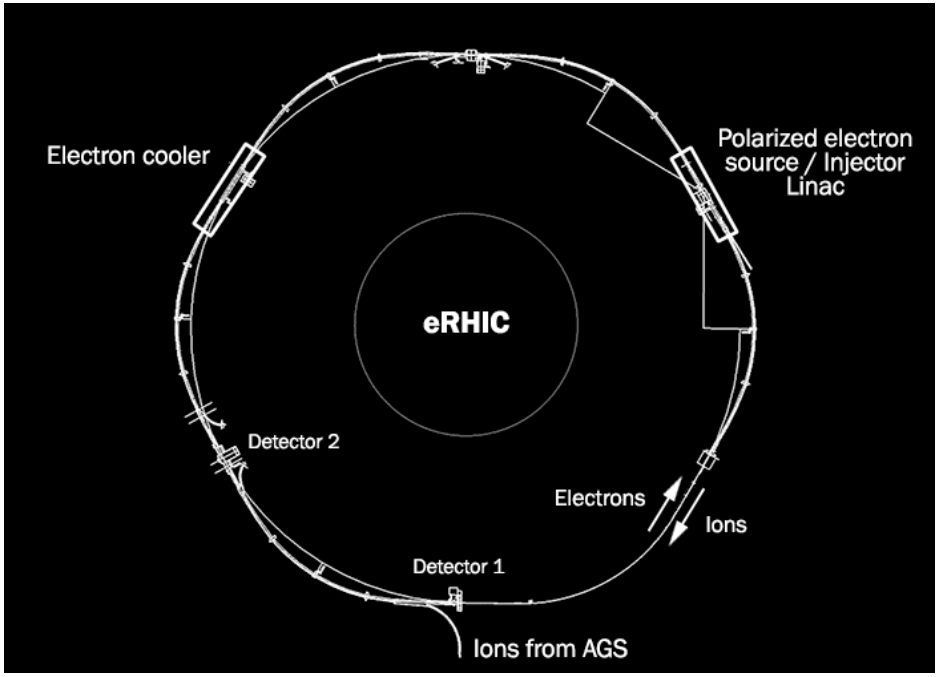

BNL

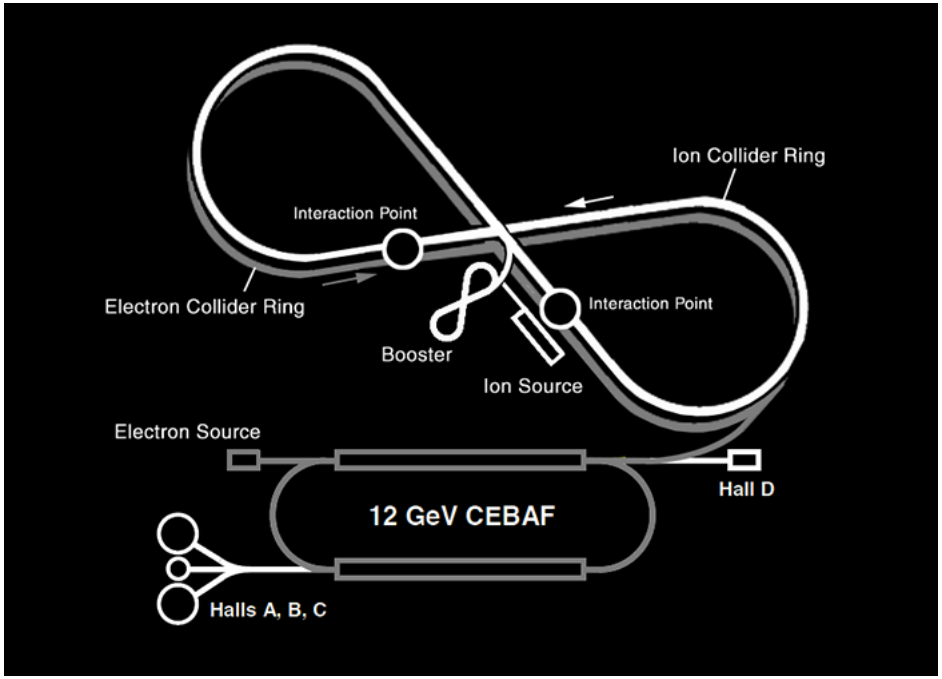

JLab

BNL Low Energy RHIC electron Cooling (LEReC)

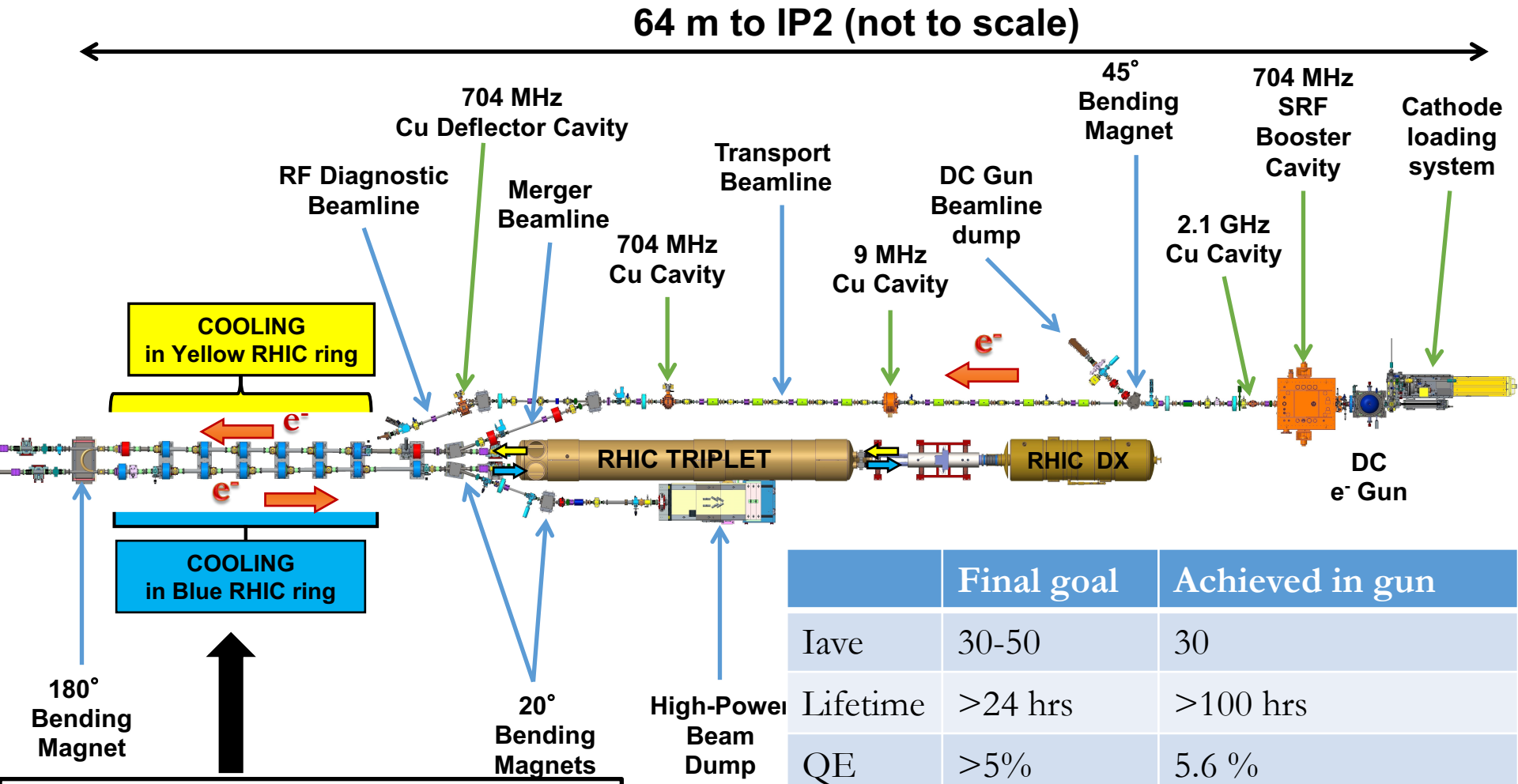

Energies E	: 1.6, 2.0 MeV
Luminosity gain	: 4×

	Final goal	Achieved in gun
Iave	30-50	30
Lifetime	>24 hrs	>100 hrs
QE	>5%	5.6 %
$\delta p/p$	$< 1.5\times10^{-3}$	1.0×10^{-3}
εn	<3.5 μrad	Hor = 1.7 μrad; Ver = 1.7 μrad

1st bunched beam electron cooler

Courtesy of Erdong Wang

BNL Coherence electron cooling-Pop

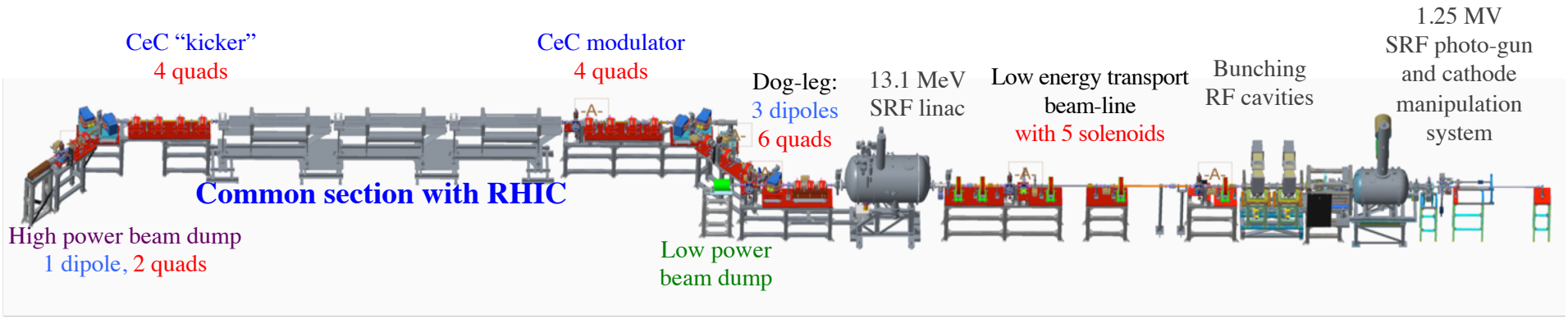

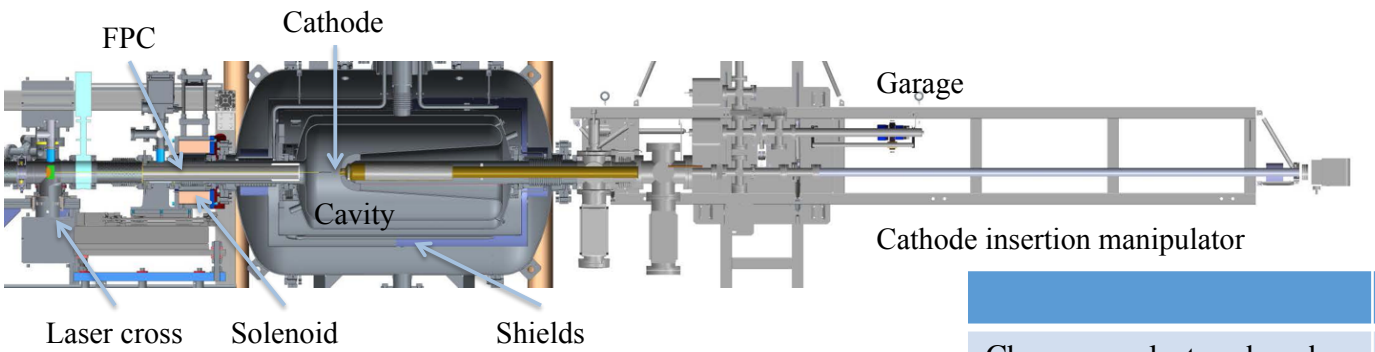

SRF 113MHz electron gun

	Design Goal	Achieved
Charge per electron bunch	0.5-5 nC	0.1- 10.7 nC
Peak current	100 A	50 -100A
Bunch duration, psec	10-50	12
Normalized beam emittance	< 5 mm mrad	3 - 5 mm mrad
FEL wavelength	13 μm	31 μm
Repetition rate	78.17 kHz	78.17 kHz
CW beam	<400 μA	150 μA

Courtesy of Erdong Wang

JLEIC Baseline: strong cooling

ERL cooler
(20-55 MeV) +
Multi-turn circulator ring

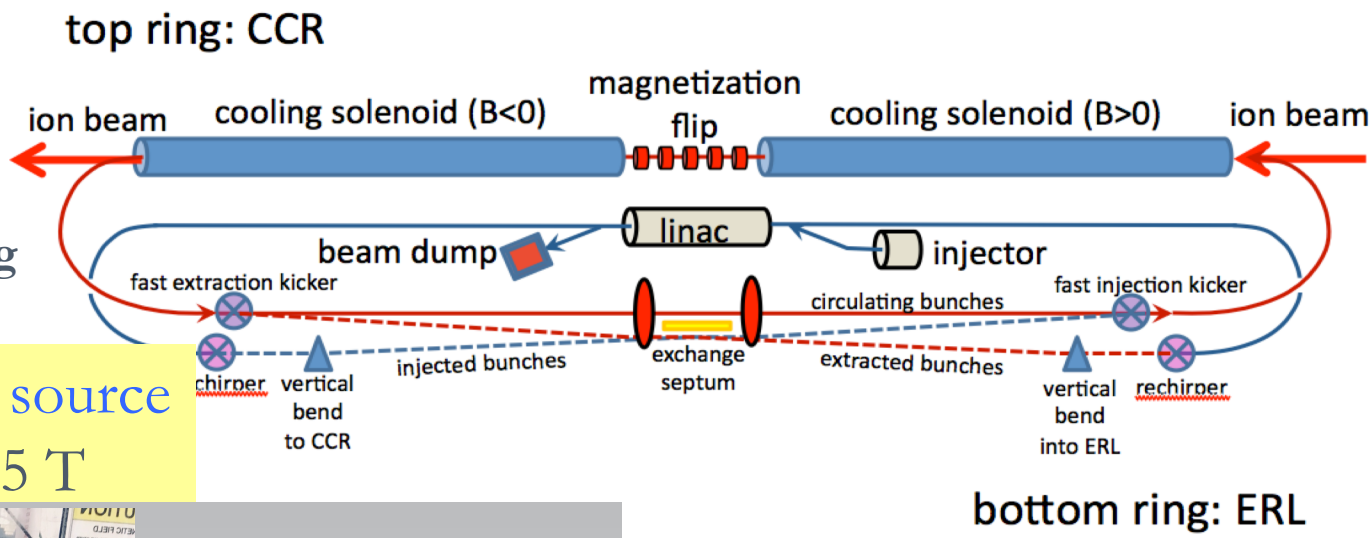

(400kV) Magnetized source
Cathode field 0.05 T

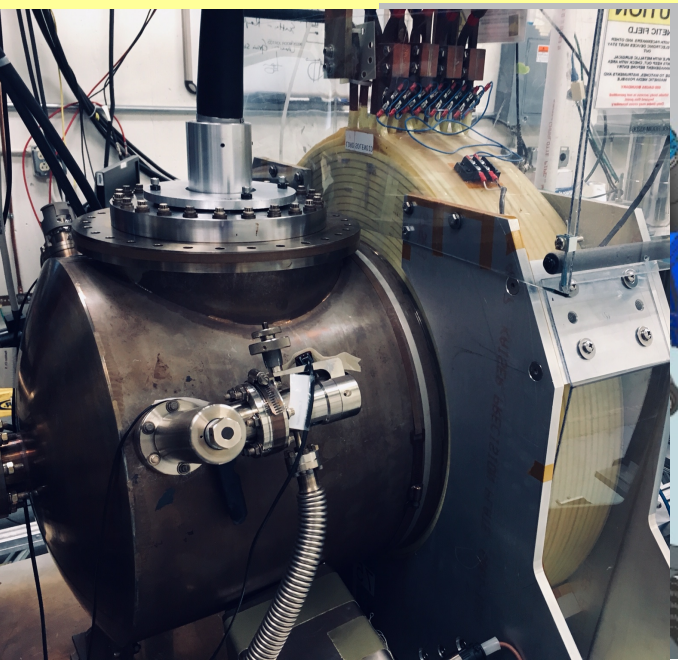

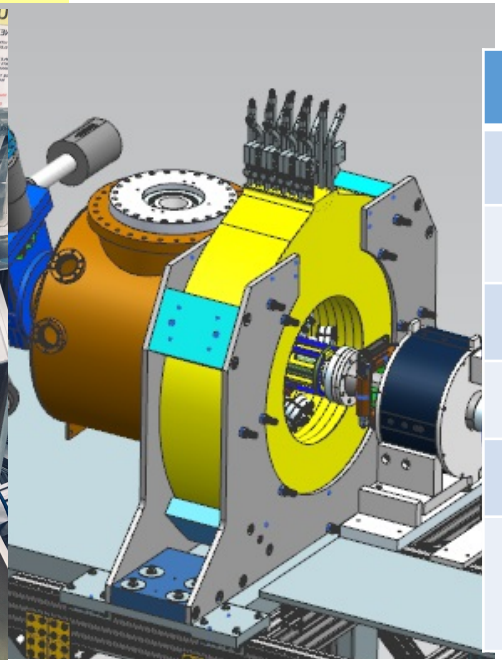

Parameter	Design
Bunch charge	3.2 nC
Repetition rate	43.3 MHz
I ave	140 mA
Bunch length	24 ps rms
Energy spread p-p	6×10^{-4}
Normalized emittance (uncorrelated)	10 mm-mrad

Electron beam is being used inside cooling solenoid where it suffers an azimuthal kick when it enters. This kick is cancelled by an earlier kick at exit of cathode solenoid

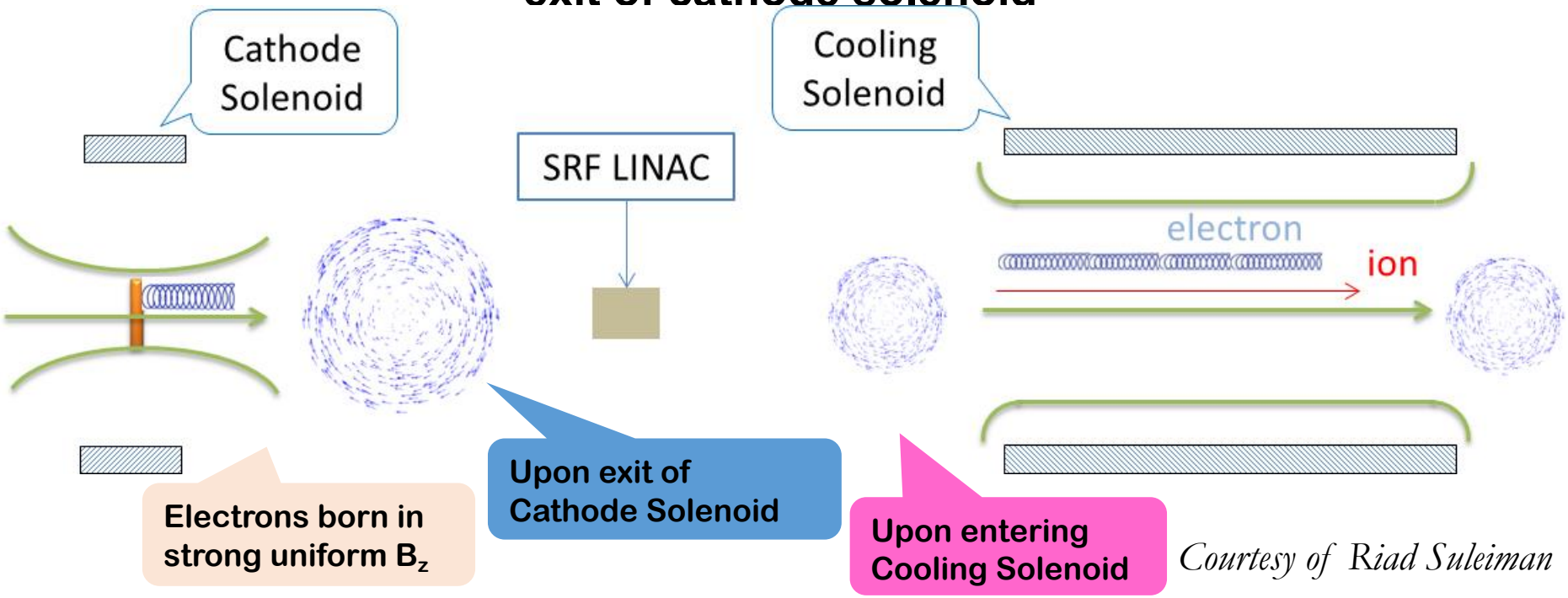

Courtesy of Riad Suleiman

Cartoon of the proposed JLEIC magnetized beam injector

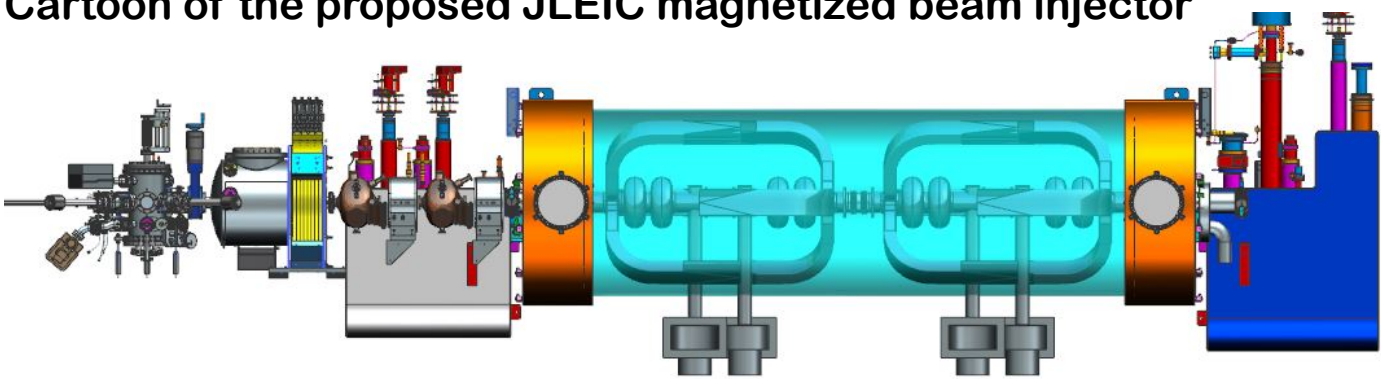

Courtesy of Steve Benson

Some of the challenges for the electron source required by proposed cooling schemes

conventional (magnetized beam)
coherent (FEL-based)
micro-bunching

Beam challenges

- Bunch charge ~ 1 to 5 nC
- Average current ~ 10 to 100 mA CW
- Energy spread < 10^4 p-p
- Top-hat longitudinal bunch shape

Gun operability challenges

- Photocathode lifetime ~ 10 kC / cathode
- One cathode per day, changeout in a few minutes
- Cathode gradient ~ 10 MV/m

The quest for robust high current photocathodes

Synthesis and x-ray characterization of Cesium Telluride photocathodes

Mengjia Gaowei

Collider-Accelerator Department, Brookhaven National Laboratory

BROOKHAVEN NATIONAL LABORATORY

Contributors: D. Strom, J. Sinsheimer, J. Xie, F. Liu, V. Pavlenko, J. Walsh, E. Muller, J. Smedley

U.S. DEPARTMENT OF ENERGY

Finding the perfect balance between lifetime and QE

Thermal Degradation of Alkali Antimonide Cathodes

Zihao Ding,[1] Siddharth Karkare,[2] Jun Feng,[2] Daniele Filippetto,[2] Matthew Johnson,[2] Steve Virostek,[2] Fernando Sannibale,[2] James Nasiatka,[2] Mengjia Gaowei,[3] John Sinsheimer,[3] Erik Muller,[1] John Smedley,[3] and Howard Padmore[2]

[1]*Department of Materials Science and Engineering, Stony Brook University, Stony Brook, New York 11794, USA*

[2]*Lawrence Berkeley National Laboratory, Berkeley, California 94720, USA*

[3]*Brookhaven National Laboratory, Upton, New York 11973, USA*

Apex photoinjector

Encapsulated Cathode!

RMD
A Dynasil Company

Oct 16th, 2018

Manufacturing and Packaging of Reliable Bialkali Photocathodes via Sputtering

- Dr. Harish Bhandari

Contributors: Dr. V. Nagarkar, Dr. J. Smedley, Dr. M. Gaowei, Dr. K. Attenkofer, Dr. J. DeFazio, Dr. H. Frisch, Dr. L. Cultrera, and Dr. I. Bazarov,