Experiences during Design, Fabrication, Assembly and Factory Acceptance Test of ITER Cryoplant Termination Cold Box

P Patel[1], H Vaghela[1], S Muralidhara[1], V Shukla[1], A Garg[1], J Das[1], B Dash[1], S Madeenavalli[1], H-S Chang[2], D Grillot[2], B Sarkar[2], M Cursan[2], K Oppolzer[3], F Sander[3], E Adler[3]

[1]**ITER-India, Institute for Plasma Research**, Block-A Sangath Skyz, 380 005, Ahmedabad, India

[2]ITER Organization, Route de Vinon-sur-Verdon, CS 90 046, 13067 St. Paul Lez Durance Cedex, France

[3]Linde Kryotechnik AG, Daettlikonerstrasse 5, 8422 Pfungen, Switzerland

Author: Pratik Patel

OUTLINE

- Introduction
- Overall methodology for execution of CTCB from design to factory acceptance test
- Description of Design, manufacturing and FAT
- Outcome of Factory acceptance test
- Challenges involved during design, fabrication, assembly and FAT
- Conclusion

INTRODUCTION

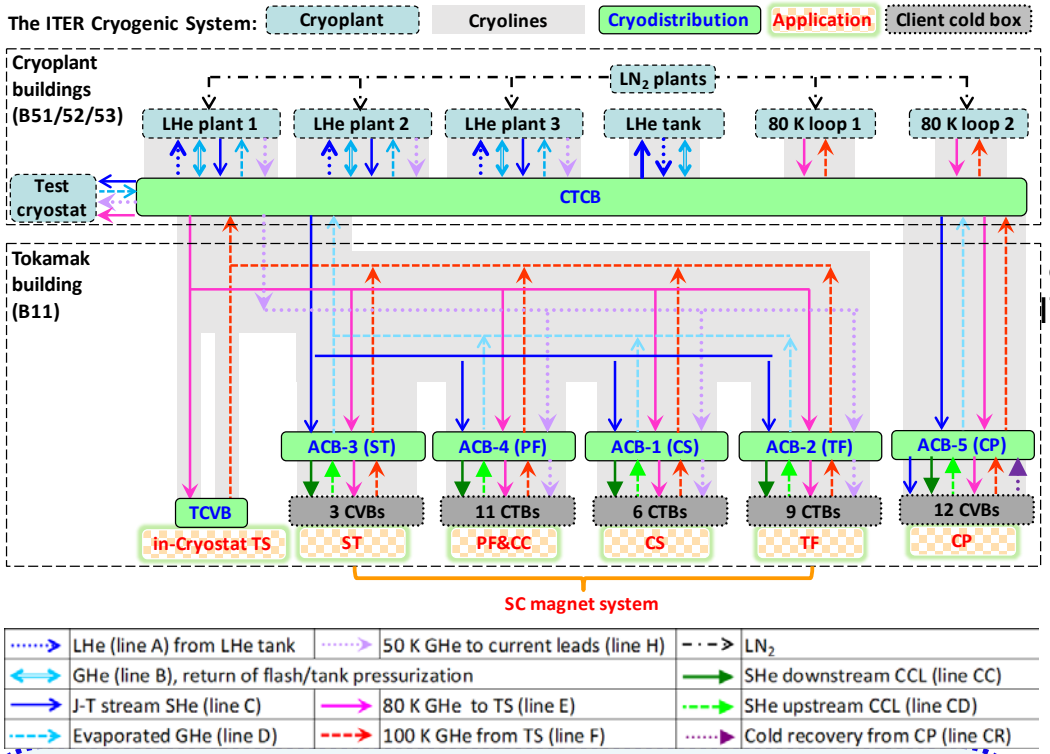

Simplified architecture of ITER cryogenic system

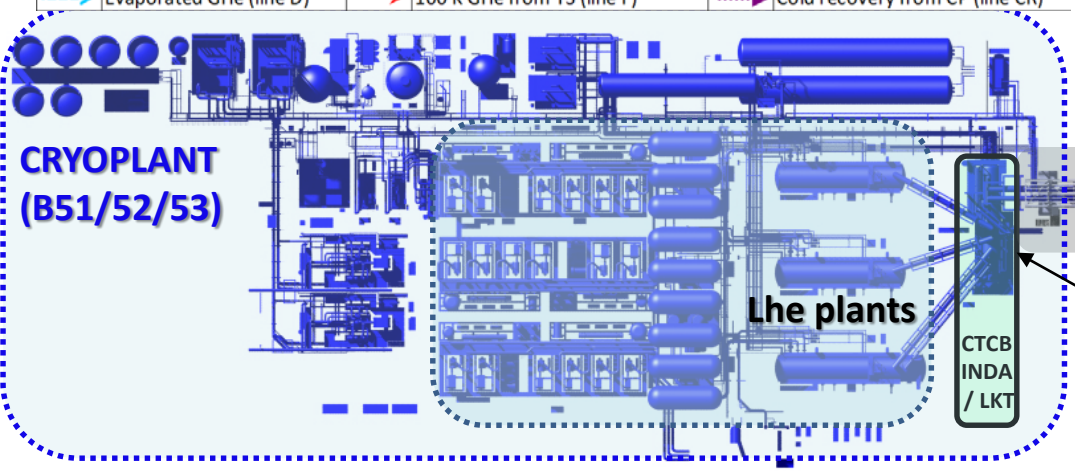

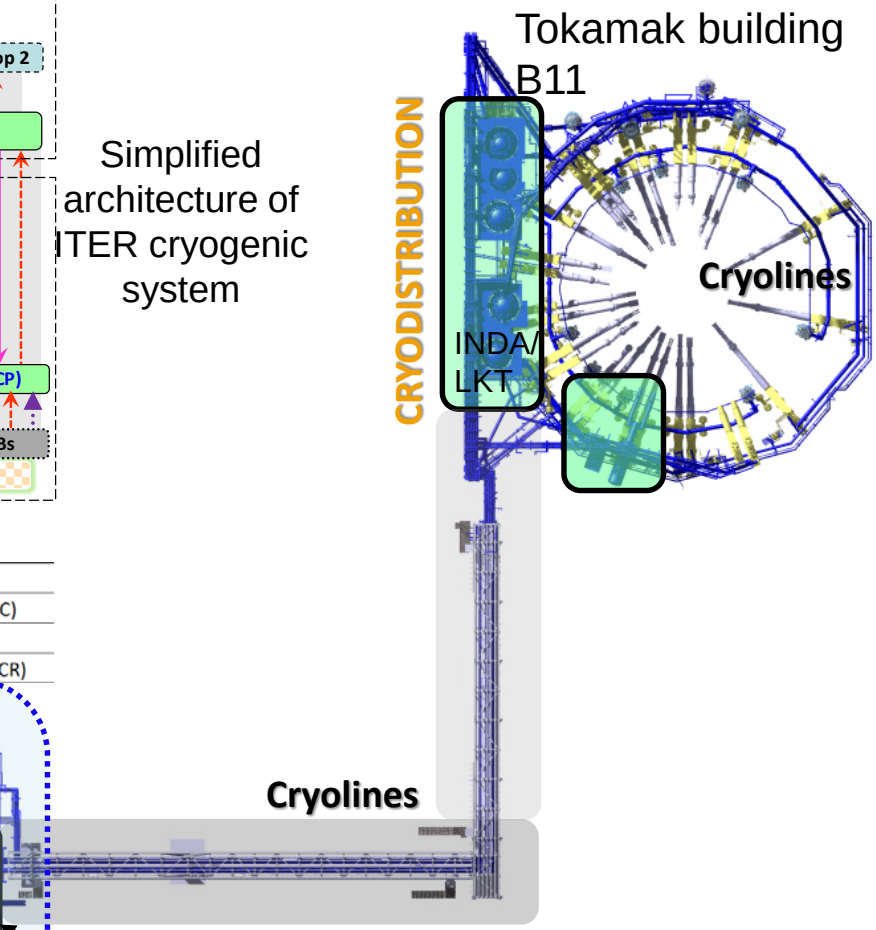

The CTCB, of 20 m length, 3.5 m diameter and ~70 tons of weight, has nine interfaces with Cryolines

Introduction cont….

- The CTCB is responsible to distribute the cold power to the applications and cryoplant as per functional requirements at various temperature level i.e. 4 K, 50 K and 80 K
- Functions:
  - The parallel operation of the three LHe plant
  - In case of failure of any single LHe plant, the CTCB redistributes cold power of the other two LHe plant
  - For Commissioning of LHe plant
  - Heating of the Gaseous helium during warm up of the ITER superconducting magnets from 4 K to 300 K
  - Purging of the interfacing cryolines before initial cool-down
- The CTCB has been designed, manufactured and assembled with various components like cryogenic valves, internal piping, thermal shield, heaters, filters, vacuum system and I&C systems etc.
- The experiences gained during the CTCB manufacturing will be useful while designing and manufacturing of the other cold boxes of CD system.

Overall methodology for execution of CTCB from design to factory acceptance test

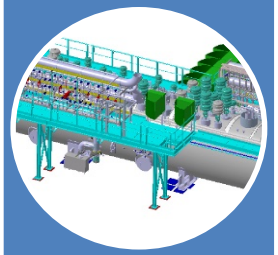

Design of CTCB with reviews at various stages

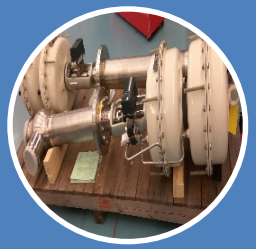

Procurement of long lead items e.g. cryogenic valves, outer vacuum jacket, sleeves etc

Manufacturing of CTCB and its components

Mechanical factory acceptance test (FAT) of CTCB e.g. Pressure test, helium leak test

1) Hardware FAT of control cubicles

2) Electrical FAT of heater cubicles

3) Software FAT

Integrated FAT of CTCB e.g. all instrumentation functional test

Design

- Developed process and instrumentation diagram as per functional process and different operation mode requirements, which also includes sizing and selection of components
- Outer shell of CTCB designed as per EN 13458 &13445
- Internal piping designed as per EN 13480-3

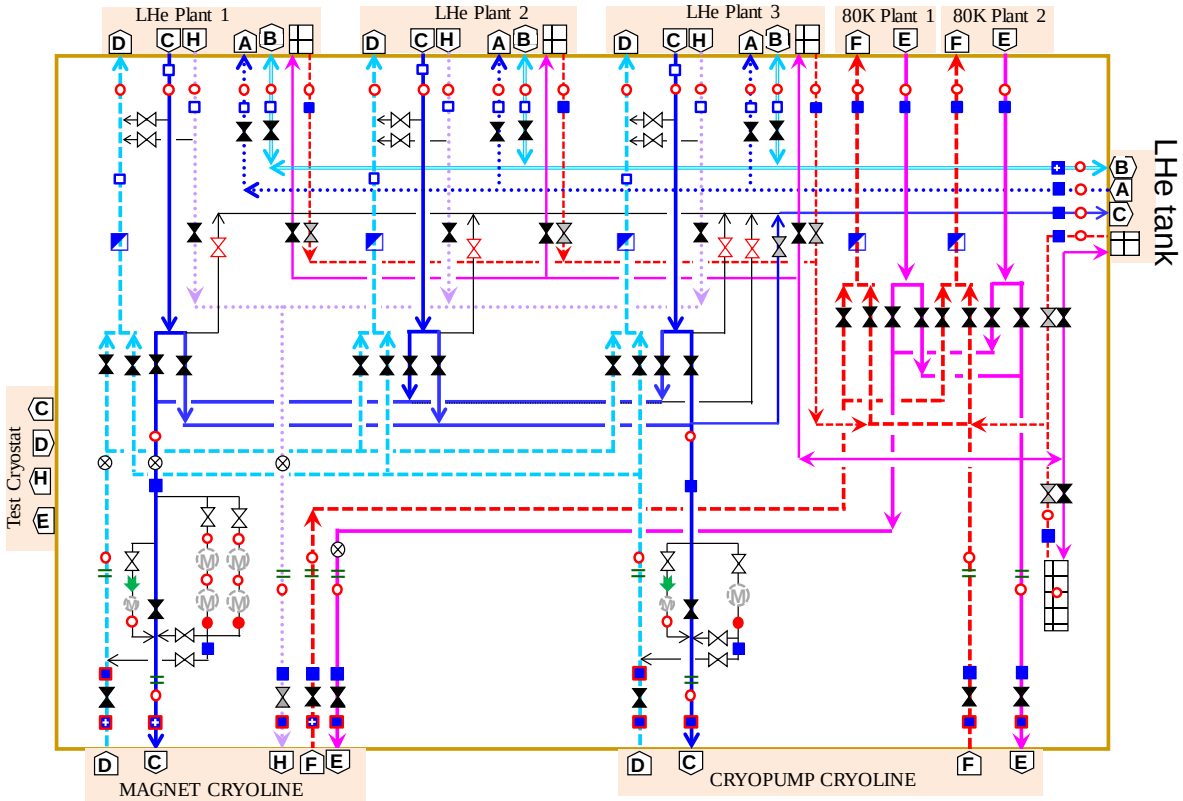

	LHe from LHe tank (line A)
	GHe return of flash/tank pressurization (line B)
	SHe (line C)
	LP GHe (line D)
	80 K GHe to TS (line E)
	100 K GHe from TS (line F)
	50 K GHe to HTS current leads (line H)
	valve 100 % open
	valve control opened
	valve closed
	valve locked close
	pressure safety valve
	3-way valve
	rupture disc
	temperature sensor element
	temperature sensor element (Cernox/PT100 set)
	temperature switch (PT100)
	pressure element
	SDU (no RD)
	SDU (with RD)
	SDU with recovery valve
	Venturi flow element (with $\Delta P/P$ element)
	Coriolis mass flow element
	(cryogenic) filter unit (with PSV and $\Delta P/P$ element)
	heater unit off
	heater unit on / operating
	connection to test cryostat (no flow)
	connection to test cryostat (with flow)
	Cryolines interfacing Cryodistribution

Simplified Process flow diagram of CTCB

Cont..

- The CTCB has interfaces with nine CLs of size up to DN1000
- The CTCB has been designed and analyzed considering several load cases and its combinations including the severe interface loads from CLs
- The CTCB is designed with many load combinations as mentioned below.

Sleeves	Line	Axial Force (N) (along CL direction)	Radial Force (N) (in the main CL direction from top)	Twist (N) (along CL direction)	Bending Moment (Nm) (in the main CL direction)
34.2C.M0	C	54640	892	1	241
	D	46724	2827	7	1166
	H	7951	255	1	65
	E	89552	2449	8	873
	F	88919	1396	2	471
	WL	-82972	67295	53601	194425
34.2C.U0	C	15061	28	0	3
	D	12496	40	0	4
	E	38308	291	0	68
	F	38039	100	0	20
	WL	-39355	27125	40448	93479

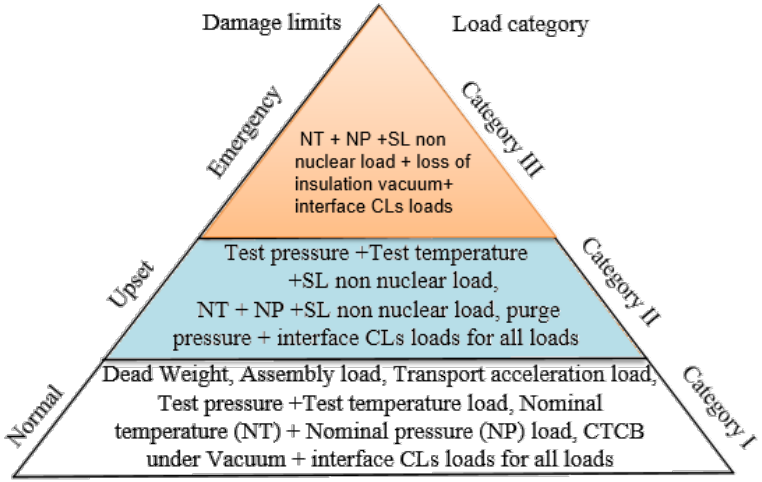

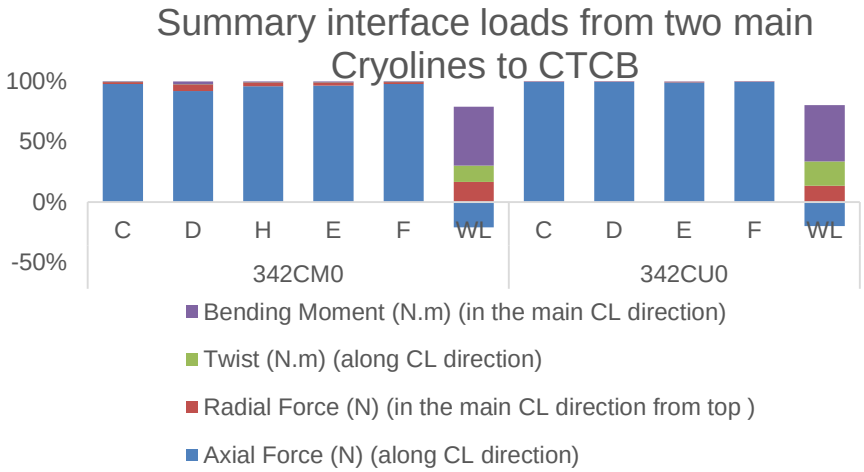

3D layout of CTCB and design

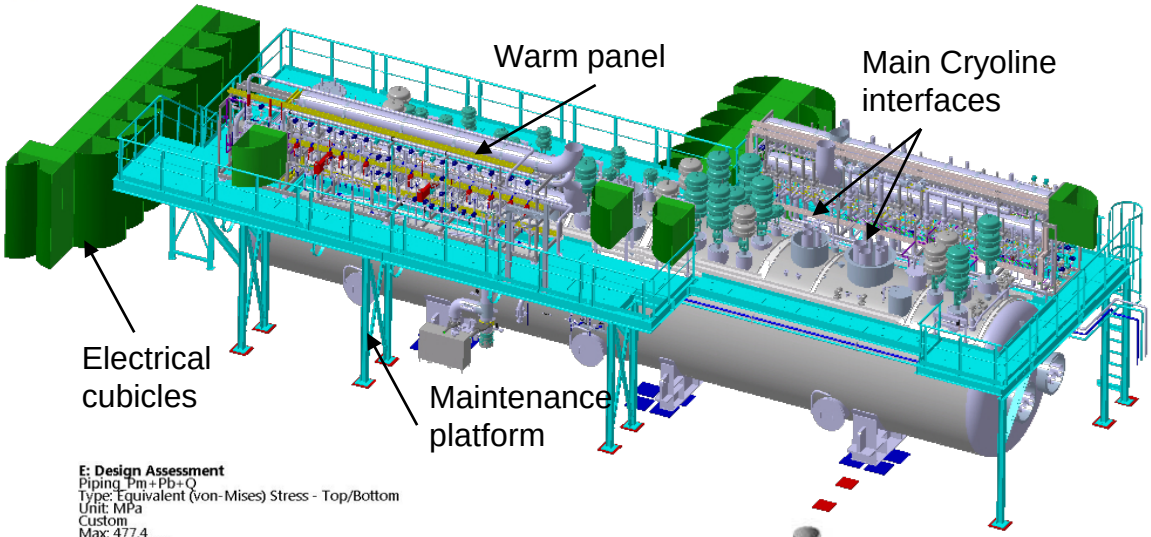

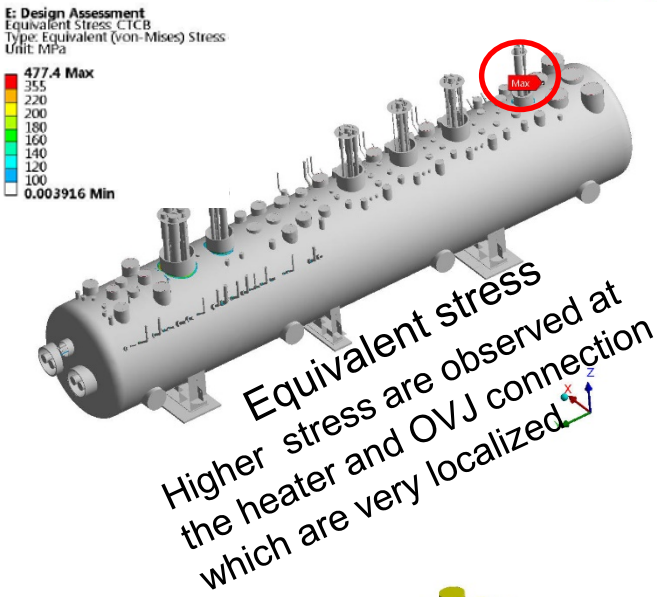

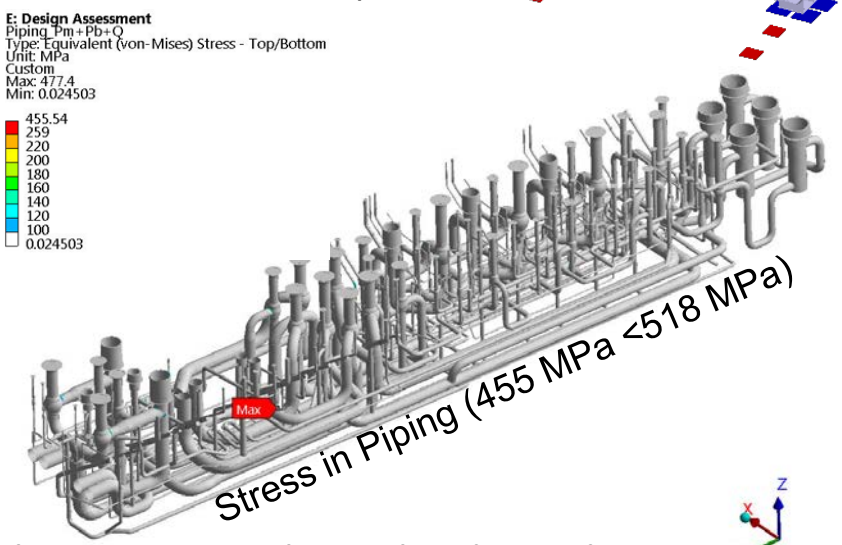

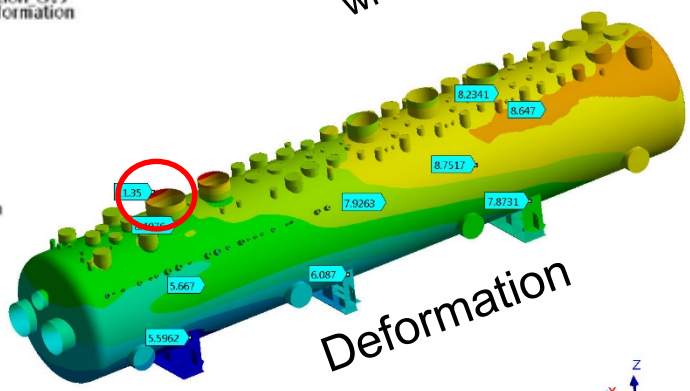

- There are total ten load combinations, out of total ten load combination, the worst load combination has been identified as "<u>normal operation + seismic load + loss of insulation vacuum + interfacing CLs loads"</u>
- The same load combination has been chosen to perform detailed analysis.

Manufacturing

- Multiple sub contractors working under instruction of single integrator for CTCB
- MRR conducted at various places in Europe and in India
- The CTCB has been manufactured under stringent criteria such as non-destructive tests of weld with 100% Radiographic Test as per requirement for QC1 components and inspection of compoents
- After, the prefabrication of all components integration took place at one location where the CTCB FAT is performed

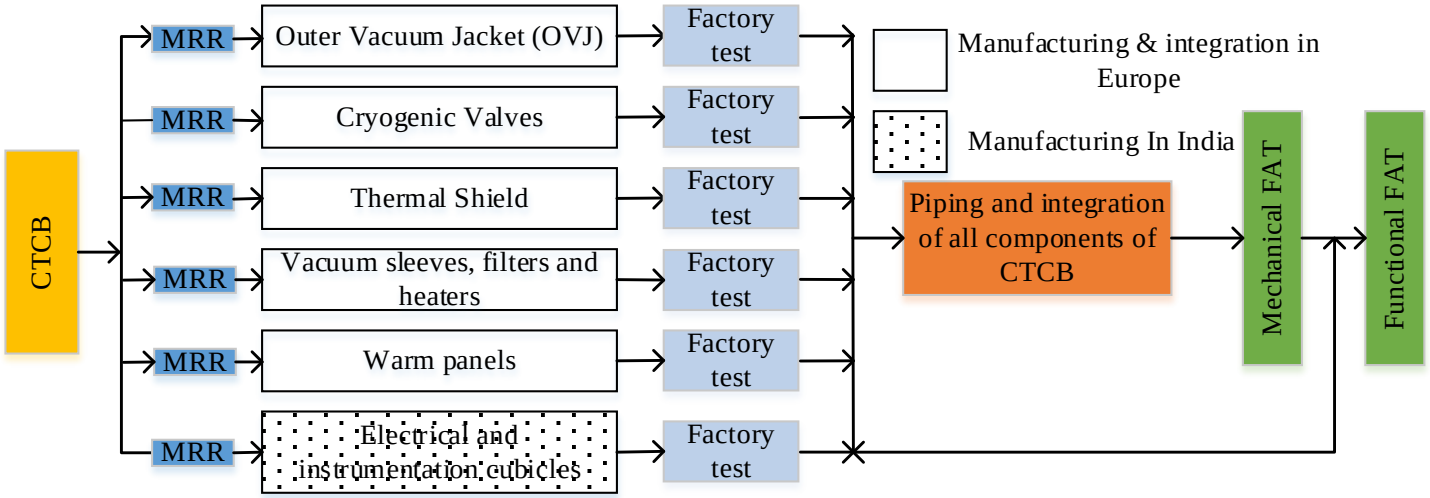

Factory acceptance test (FAT)

- The FAT is one of the vital steps before installation of components at the operation site
- The FAT is intended to validate the performance and functions of each CTCB components after their fabrication and final integration at the factory
- For simplicity FAT is divided in mechanical and functional FAT

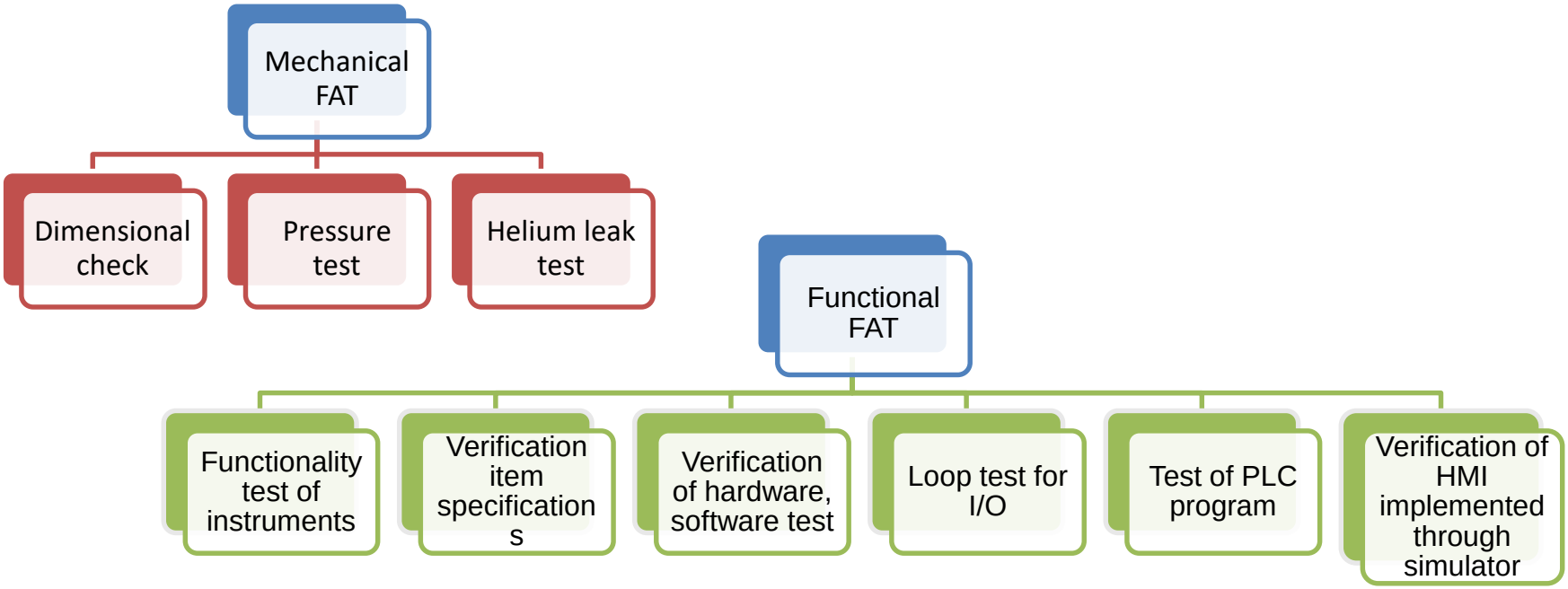

Outcome of Factory acceptance test

Mechanical FAT

Description	Test fluid/items	Observed results	Acceptance criteria
Overall dimensional check	Sleeve/OVJ/saddle support	As per approved manufacturing drawing	As per approved manufacturing drawing
Hydraulic continuity check	Process pipes	As per P&ID	As per P&ID
Pressure test (PT) -Line A,B,D,H (at 15.7 barg)	50% GN2 & 50% GHe	No permanent deformation, no pressure decrease	No permanent deformation, no pressure decrease
PT- Line C, E & F (at 30 barg)	50% GN2 & 50% GHe		
PT -TS (at 30 barg)	100% GN2		
PT-WP 1&2 (at 28.6 barg)	100% GN2		
Leak Test (LT) Global-Process to vacuum	Internal piping A,B,D,H & C,E,F	1.4×10^{-8} (mbar-l/s)	1×10^{-7} (mbar-l/s)
LT Atmosphere to Vacuum	Vacuum sleeves, feedthroughs	1.6×10^{-7} (mbar-l/s)	1×10^{-6} (mbar-l/s)
LT Global -Process to the atmosphere	All circuits (Warm panel 1&2)	2.1×10^{-6} (mbar-l/s)	1×10^{-5} (mbar-l/s)

Functional test

- The functional FAT has been performed with the CTCB and all cabinets as per comparable installation requirements at site.
- The hardware FAT has been conducted to check functionality of electrical cabinets
- The software FAT of the CTCB has been performed using PLC and simulator.
- All the instrumentations were successfully executed using PLC.
- Finalized HMI screens, checked of all alarm signals, control loops (17 nos.) and I/O signal (~500 nos.) test as per logic diagram in simulation mode etc.

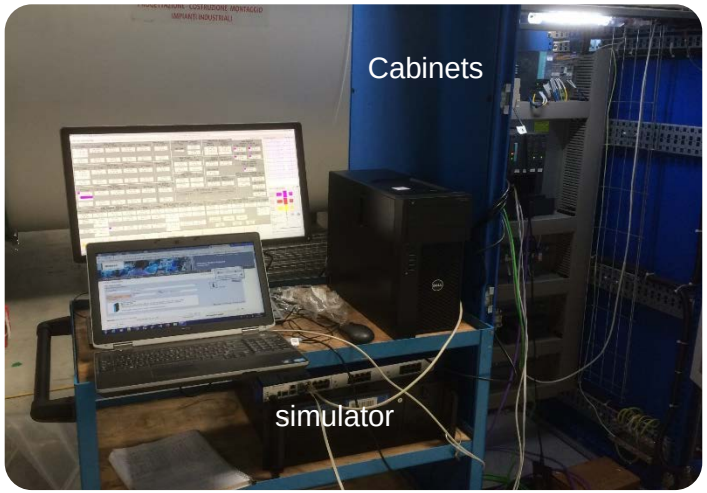

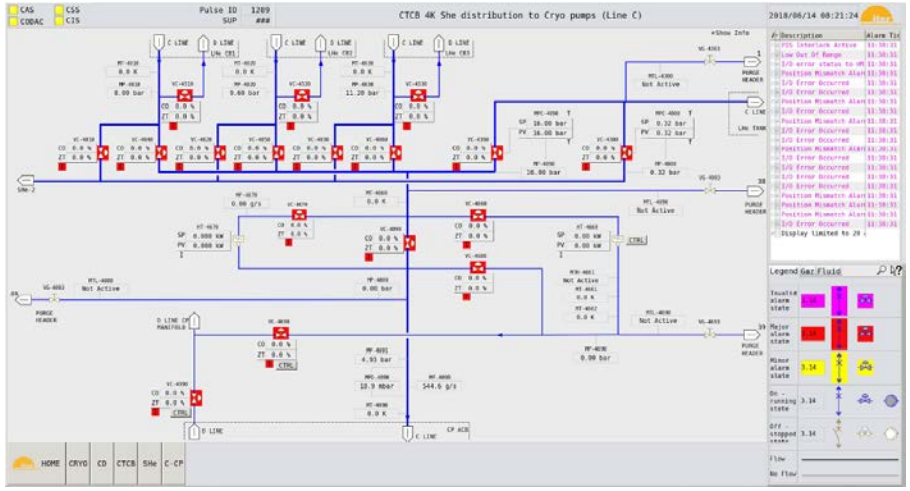

One of the CTCB HMI screen of line C

Challenges and its resolution steps

- For the ITER CD system, starting from the conceptual design of the CTCB to the factory acceptance test, it has encountered many challenges and summarises below

	Challenges	Resolution steps and lesson learnt
Mechanical Design	Meeting the balance between the interface tolerance of ±25 mm with CLs and the interface loads from CLs	Interface tolerances for CTCB has been reduced from ±25 mm to ±10 mm in order to reduce interface loads i.e., bending load. Interface should be frozen before final design, whenever feasible.
	Management and validation of interface coordinates between CLs and CTCB at design and manufacturing phase	Managed and validated proper interface coordinates between CLs and CTCB with exact available 3D model through design database platform (ENOVIA) which is very useful tool for complex interface management.
	Progressing in the cold box design of this big scale while interfaces are at a different level of maturity	Design with a higher safety margin for CLs interface load (conservative design) with provision to adopt additional stiffeners on CTCB OVJ. Saddle support design has been optimized for distributed load transfer to the ground. CL interface loads should be envisaged from the conceptual design phase and inherent line flexibility should be provided by proper layout.

cont….

	Challenges	Resolution steps and lesson learnt
Process	Recovery of helium through a common safety relief header line was not possible due to limited downstream mass flow rate handling capacity.	Recovery valves have been installed upstream safety relief valves (SRVs) in order to recover the helium prior to the opening of the SRVs in case of pressurization events. Helium recovery from large volumes are possible using the automatic recovery valves.
	Bigger size (>DN150) cryogenic valves to handle mass flow 4 kg/s were not readily available.	Cryogenic valves of DN200 which fulfil the process requirements were specified, designed, manufactured and factory tested. Opening and closing time of bigger valve sizes to be considered for integrated control system development and commissioning.
	Warm-up requirement of the Super Conducting magnets having cold mass of ~9,000 tons	Large capacity 600 kW electrical heater designed, manufactured and factory tested for functionality.
	Control system development for the parallel operation of LHe plants and disconnections with interface system.	Global level controls (where extensive signal exchange with CTCB is required) were assigned through cryogenic system master controller while process control within CTCB managed by CTCB control system

Challenges….cont….

- The CTCB Thermal Shield (TS) is made of hydro-formed bubble panels of total 48 elements connected in parallel/series configuration
- During the FAT, it was reported that the <u>helium leak inside the bubble panel</u> of the TS is higher than acceptable limit of 1 X 10^{-7} mbar l/ s.
- The final helium leak (<u>after bypassing the three elements</u>) is <u>2.9 X10^{-8} mbar l/s</u> and it is within the acceptable limits (1 X 10^{-7} mbar l/s).

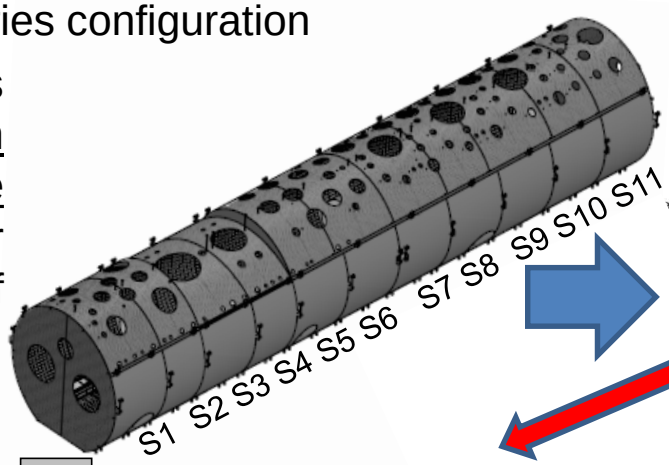

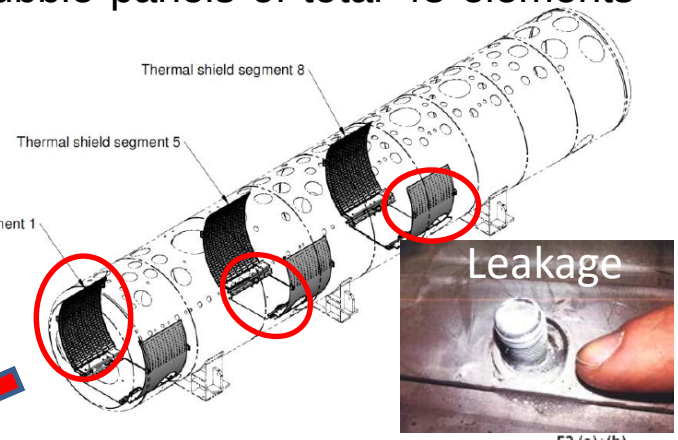

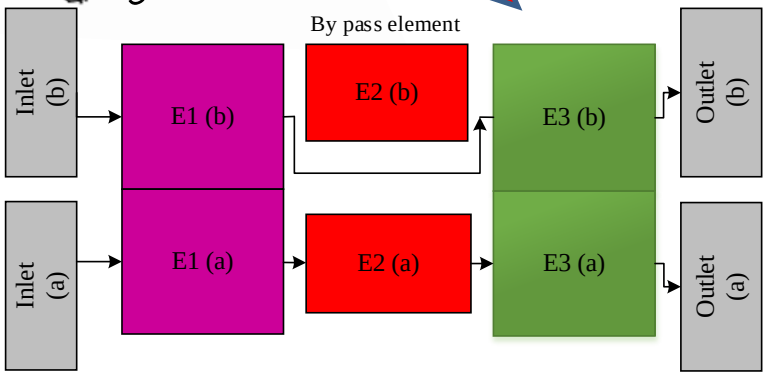

Flow paths in a segment 1 of thermal shield

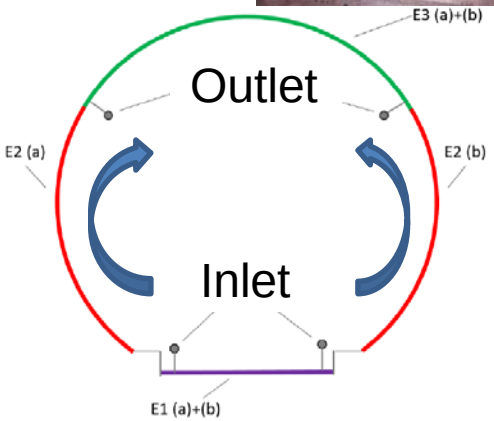

The elements of a segment

- Thermal and hydraulic analysis has been performed and investigated that heat load on the 80 K TS is almost unchanged and the average surface temperature is observed to be around 88 K, <u>which is below the given limit of 100 K</u>.
- The total heat load on the 4K surface after bypassing thermal shield elements is about **<u>211 W</u>** which is within the maximum allowed heat load of <u>275 W.</u>

Transportation and Status of CTCB

- After the successful completion of the FAT, the CTCB has been delivered from Switzerland to France via road and waterways to ITER Organization (IO)
- Presently, the CTCB is at temporary location of installation area

CONCLUSION

- The design, fabrication, assembly and factory test of CTCB has been successfully completed with fulfilling all the functional and technical requirements
- The CTCB and its components have been delivered to ITER Organization (IO) in February 2019
- The installation of the CTCB is planned in the last quarter of 2019 at ITER organization site to match the commissioning of the three LHe plants'.
- The performance of the CTCB in normal operation condition will be demonstrated during the site acceptance test at IO.
- The experiences observed and lessons learnt during the execution of the CTCB project will be implemented in other cold boxes of the ITER Cryodistribution system

ACKNOWLEDGMENTS

Acknowledgments

Authors would like to thank the colleagues in ITER-India and ITER Organization and as well as Linde Kryotechnik for their contribution to the ITER Cryodistribution project execution.

Disclaimers

The views and opinions expressed herein do not necessarily reflect those of ITER organization and ITER partners.


Thank you for your kind attention
welti-furrer
welti-furrer
welti-furrer