Thermodynamic Comparison of Small Liquid Nitrogen Generators driven by Mixed-refrigerant J-T refrigerators and Gas Expansion cycles

H.C. Wang [a, b], H. Guo [a, *], G.F. Chen [a], Q.L. Song [a, b], M.Q. Gong [a, b, **]

[a]Key Laboratory of Cryogenics, Technical Institute of Physics and Chemistry, Chinese Academy of Sciences, Beijing 100190, China

[b]University of Chinese Academy of Sciences, Beijing 100049, China

Abstract number: **656** (Category: CEC-01)

Technical Institute of Physics and Chemistry
CHINESE ACADEMY OF SCIENCES

1. Introduction

Small Liquid nitrogen (LN_2) generator is a convenient choice for field and remote users. Comparing with Stirling/G-M cryocoolers, mixed-refrigerant J-T (MRJT) refrigerators and feed gas expansion cycles (Kapitza cycle, etc.) can be employed in small liquefiers with higher cooling power utilization efficiency and lower construction cost. However, detailed comparison of MRJT and Kapitza types of LN_2 generators are rarely reported. Therefore, the performance of MRJT and Kapitza types are compared, as a reference for the design of small liquefiers.

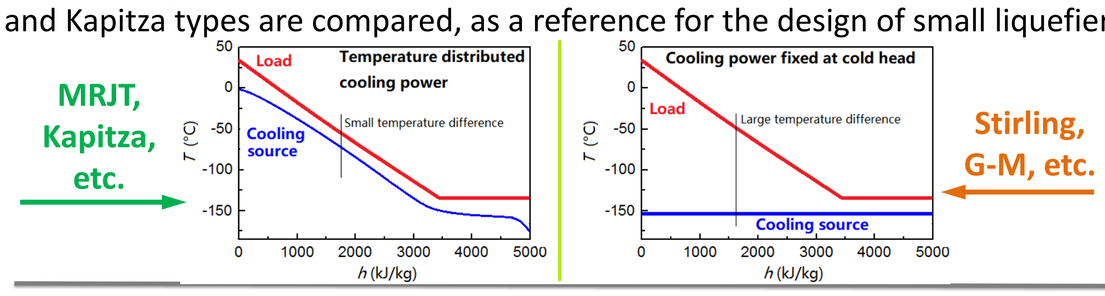

2. Process configuration

Both of the **MRJT type** and **Kapitza type** of LN_2 generators are employed for low-pressure (< 9.0 bar) pure N_2 liquefaction and air separation, respectively.

2.1 MRJT type LN_2 generator

- **Based on propane precooled single-stage MRJT separation cycles**
  - Driven by single-stage oil-lubricated compressors for normal refrigeration
- **Low pressure N_2 liquefaction and air separation.**
  - Closed N_2 cycle to deliver cooling power from flammable mixture to air
  - Cooling power for top condenser is supplied by throttled bottom liquid

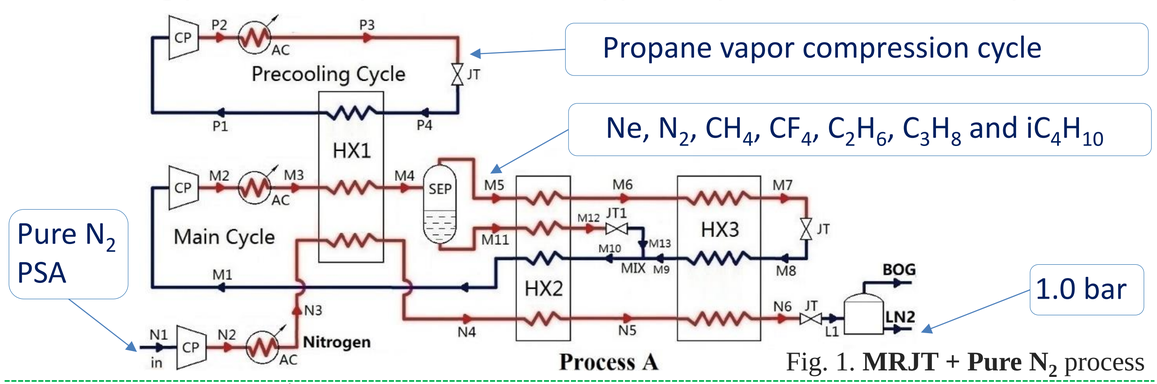

Fig. 1. **MRJT + Pure N_2** process

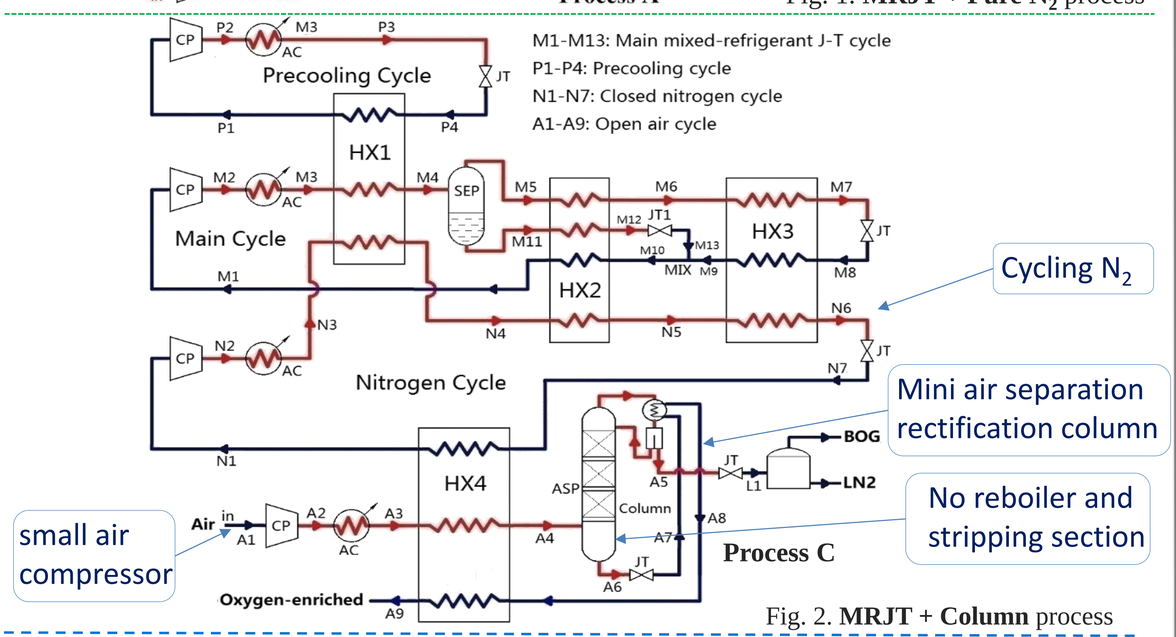

Fig. 2. **MRJT + Column** process

2.2 Kapitza type LN_2 generator

- **Based on R22 precooled single-stage Kapitza cycles**
  - Driven by small air compressors and precooled by nonflammable R22 cycles

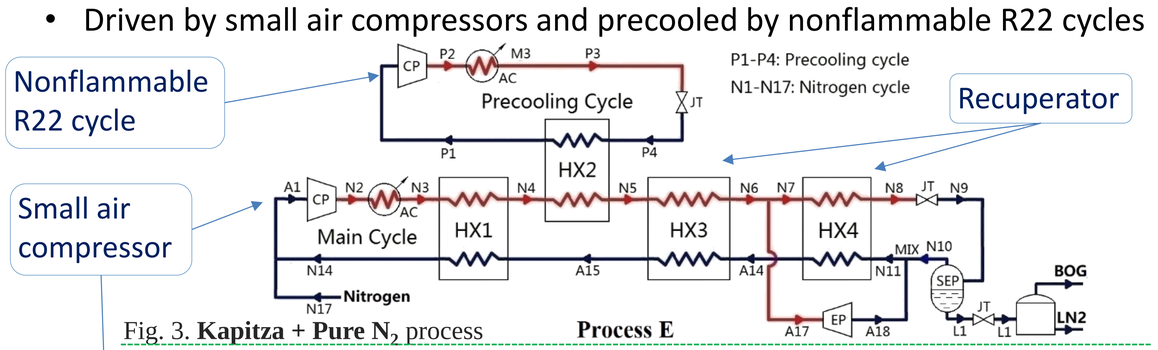

Fig. 3. **Kapitza + Pure N_2** process

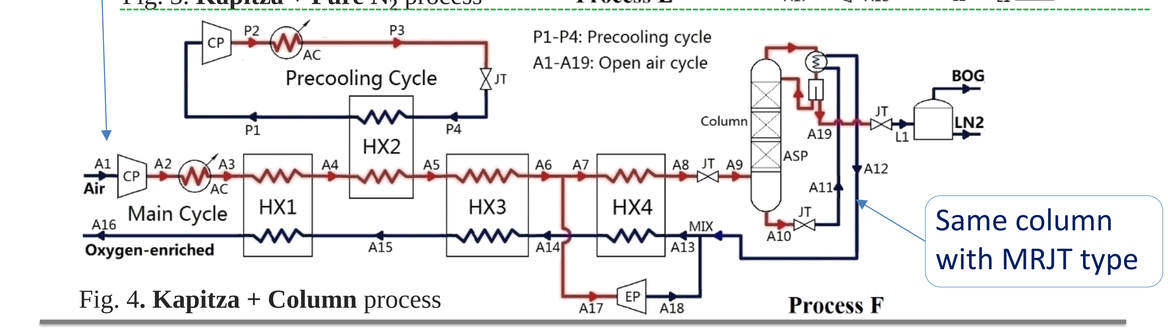

Fig. 4. **Kapitza + Column** process

4. Summary and discussion

Both for small scale low pressure (< 9.0 bar) N_2 liquefaction and air separation:

- **The efficiencies (*FOM*) of MRJT types are obviously superior to Kapitza types**
- **The total compressor displacements of MRJT types are smaller than Kapitza types**
- **Exergy losses in after cooler and nonideal expander are large in Kapitza types**

Therefore, MRJT types might be more favorable for small LN_2 generators

3. Thermodynamic analysis and comparison

3.1 Analysis methods and conditions

LN_2 output ($g_{v,LN2}$), specific power consumption (*SPC*) and figure of merit (*FOM*) are objectives:

$$SPC = \frac{g_{v,LN2}}{W_{CP,main} + W_{CP,precoolig} - W_{EP}} \qquad FOM = \frac{m_{LN2}(e_{LN2,out} - e_{feed,in})}{W_{CP,main} + W_{CP,precoolig} - W_{EP}}$$

Exergy losses:

$$I_j = \sum E_{in} - \sum E_{out} + \sum W_{input} - \sum W_{output} - \int_0^{Q_c} (T_0/T_c - 1)\delta Q_c \qquad \Pi_j = I_j / W_{total}$$

- Heat exchanger minimum approaches: 3 K.
- Maximum discharge temperature: 385.15 K.
- Compressor / expander adiabatic efficiency: 60% / 70%
- Outlet temperature of after cooler and feed gas temperature: 308.15 K
- The mixture composition shift and heat leak are ignored
- Ambient temperature: 300 K
- Maximum discharge pressure: 20 bar
- Pressure drops: 70 kPa
- **PR-vdW model**
- Expansion work 100% recovered

3.2 Performance of MRJT type LN_2 generators

Table 1. Key operating parameters in MRJT type LN_2 generators

Process	MRJT + Pure N_2 (A)		MRJT + Column (C)		
Cycle	Main	Precooling	Main	Precooling	Cycling N_2
Compressor suction pressure (bar)	3.50	2.20	3.50	2.20	4.70
Compressor discharge pressure (bar)	17.00	12.50	17.00	12.50	8.20
Temperature before throttling (K)	98.00	308.15	98.00	308.15	98.00
Temperature after throttling (K)	90.43	252.67	90.43	252.67	94.29
Mass flow rate (g s^{-1})	5.70	2.60	5.70	2.60	0.75

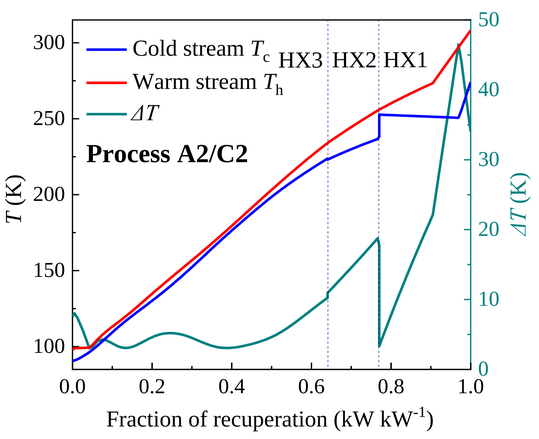

Fig. 5. *T-Q* diagram of MRJT refrigerator

Optimized mixture composition → Favorable T-Q → Higher-pressure liquefaction, Low-pressure separation → LOW SPC

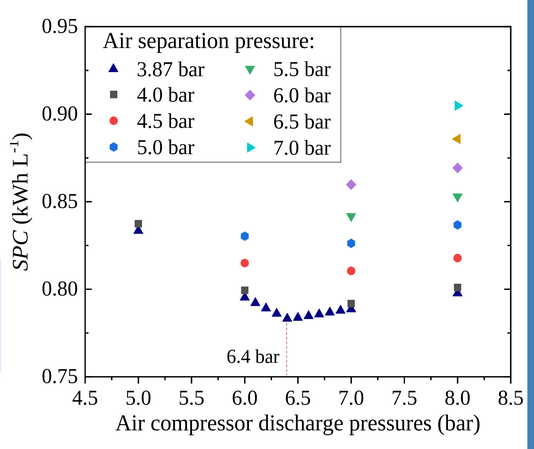

Fig. 8. performance of MRJT + Column

3.3 Performance of Kapitza type LN_2 generators

Table 2. Key operating parameters in Kapitza type LN_2 generators

Process	Kapitza + Pure N_2 (E)		Kapitza + Column (F)	
Cycle	Main	Precooling	Main	Precooling
Compressor suction pressure (bar)	3.50	2.20	3.50	2.20
Compressor discharge pressure (bar)	17.00	12.50	17.00	12.50
Temperature before throttling (K)	98.00	308.15	98.00	308.15
Temperature after throttling (K)	90.43	252.67	90.43	252.67
Mass flow rate (g s^{-1})	5.70	2.60	5.70	2.60

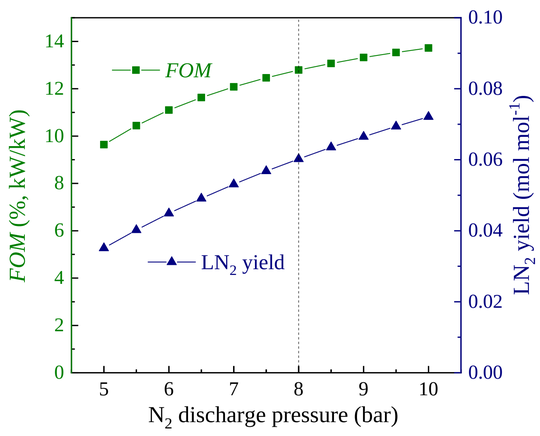

Fig. 7. performance of Kapitza + Pure N_2

High liquefaction pressure → High FOM ← Low separation pressure

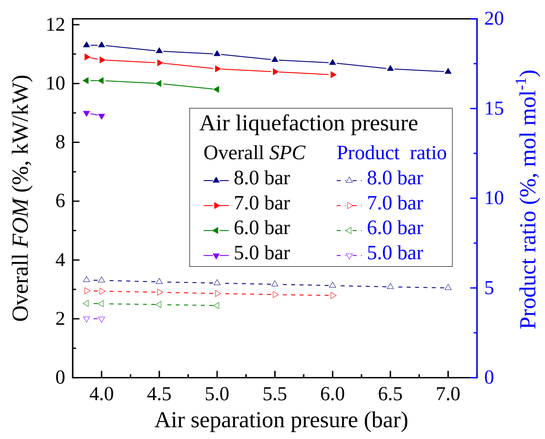

Fig. 8. performance of Kapitza + Column

3.4 Performance comparison of MRJT and Kapitza types of LN_2 generators

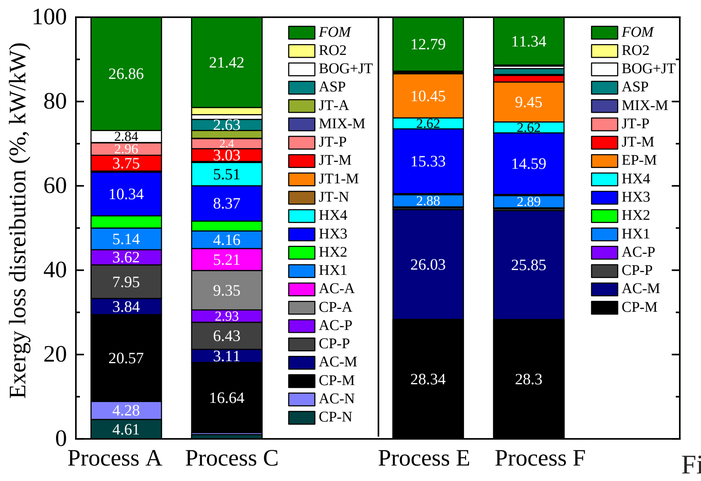

Fig. 9. Exergy loss distribution (Π_j)

MRJT type:
- Low losses in after coolers
- Favorable recuperation performance

Kapitza type:
- Large loss in after cooler due to the high discharge temperature
- Large loss in non-isentropic expansion, larger than throttling loss of MRJT
- Expansion exergy loss enlarged due to expansion work insufficient recovery

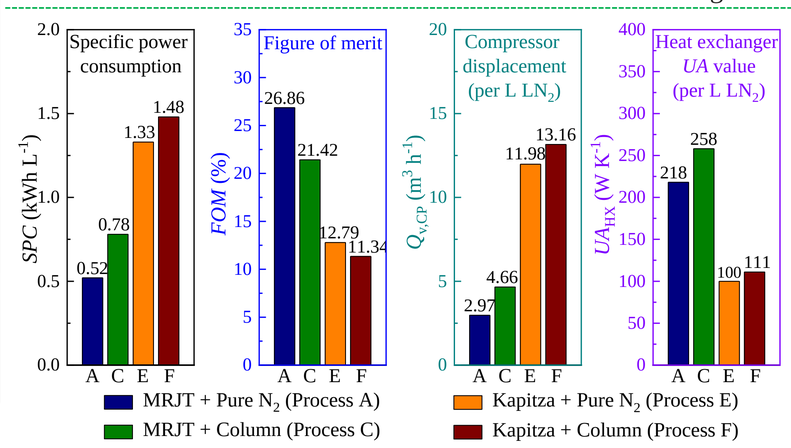

- **Higher efficiency of MRJT type than Kapitza type** → **MRJT: lower operating cost**
- **Smaller compressor size of MRJT type than Kapitza type** → **MRJT: lower construction cost**

Fig. 10. Key parameter comparison