Control and Commissioning of a Subcooled Helium Cryogenic Testing Platform with Cold Compressors

Z W Zhou, Q Y Zhang, A Y Cheng, P Zhu, S S Li and Z G Zhu*
Institute of Plasma Physics, Chinese Academy of Sciences, Hefei 230031, P.R. China
Email: zzw@ipp.ac.cn

ID:C2Po2A-04

1. Introduction

- The Experimental Advanced Superconducting Tokamak (EAST) has been successfully cooled down by 4.5 K supercritical helium (SHe) in fifteen experiments since 2006. Using subcooled helium as the coolant can reduce the coil temperature and improve the cryogenic stability of the superconducting coils, which will increase the magnetic fields and help to obtain higher plasma parameters in the fusion device.
- To improve the EAST subcooled helium system, a 700 W @3 K subcooled helium cryogenic testing platform with cold compressors has been designed and constructed to test the cold compression method for 3 K subcooled helium. The platform had a successful commissioning to get 3 K subcooled helium in the end of 2018 at CASIPP, and it is the first subcooled helium cryogenic system based on cryogenic decompression technique in China.

2. Description of subcooled helium system

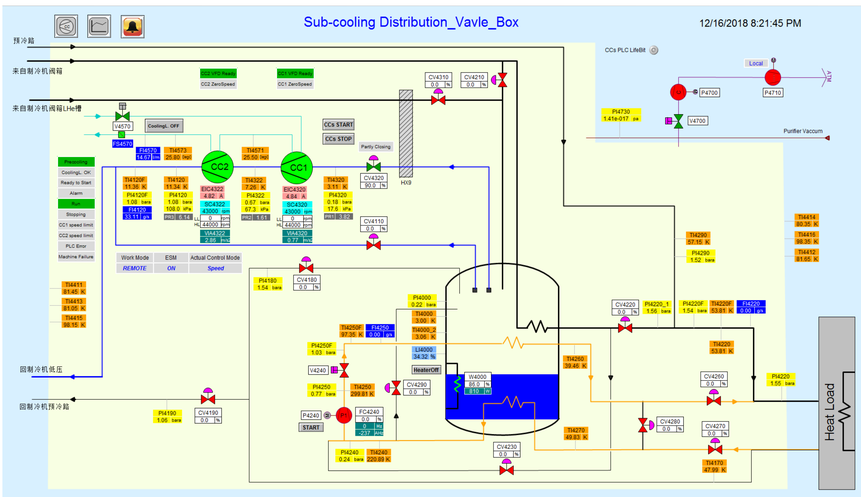

Figure 1. Process flow & Instrumentation diagram of subcooled distribution system in supervisory interface

- The subcooled helium cryogenic testing platform is comprised of a 2.5 kW@4.5 K refrigerator and a cryogenic distribution system to provide SHe by helium circulating pump and subcooled helium by cold compressors.
- Two centrifugal cold compressors with hybrid ceramic ball bearings are arranged in series to decompress the saturated helium at 1.2 barA in LHe vessel to sub-pressure at 0.23 barA for 3 K subcooled helium.
- An electrical heater of 1000 W was used in 2000 L Lhe vessel to simulate the heat load of the superconducting magnets by regulating power to control mass flow rate of CCs.

3. Control and operation of subcooled helium system with cold compressors

Table 1. Design parameters of two cold compressors (CCs)

Design Parameter	CC1	CC2
Helium mass flow rate (g/s)	32.8	32.8
Inlet total pressure (barA)	0.179	0.65
Outlet total pressure (barA)	0.69	1.3
Inlet total temperature (K)	3.865	7.5
Outlet total temperature (K)	7.446	11.1
Compression ratio	3.85	2
Isothermal efficiency (%)	>= 65	>= 65
Rotor Speed (rpm)	43000	43000
Wheel diameter (mm)	66	66

- The control system was designed and implemented on SIMATIC S7-300 PLC system. Two CCs are controlled by SIMATIC S7-1200 PLC on site, which communicates with higher control system by Profibus DP.
- The CCs driven by high speed motor controlled by 2 pieces of one-phase VFD. The bearing vibration are checked with vibration sensors for monitoring the bearing's mechanical status.

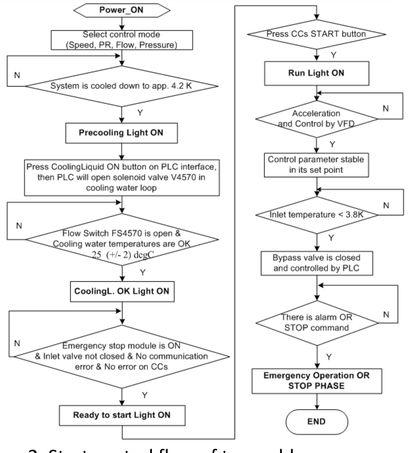

Figure 2. Start control flow of two cold compressors

Emergency operation and stop process of CCs

- Once any alarm occurs, PLC-CC will reduce the faulted CC speed automatically step by step till the alarms disappear.
- Five alarm categories according to their seriousness were defined, and each has its own priority. The speed of CC will be reduced with different steps according to different alarm category.
- The CCs will be stopped when its PLC receives the stop command. The power of all CC machines is disconnected and the CCs are freely run out during stopping. The inlet valve and bypass valve are fully opened in the stop process.

Figure 3. Subcooled helium distribution valve box and its top cover with two CCs

4. Commissioning Results of subcooled helium system with cold compressors

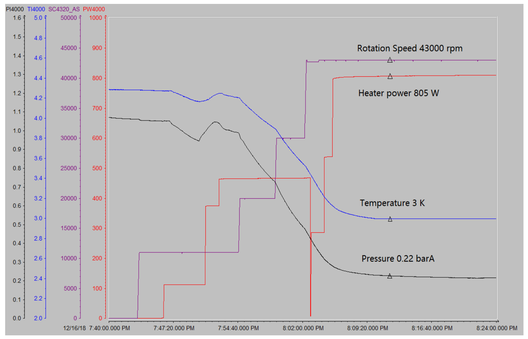

Figure 4. Temperature and pressure in saturated helium bath as well as the heater power during the operation of CCs

Table 2. Operation parameters of two cold compressors in steady state

Operation Parameter	CC1	CC2
Inlet total pressure (barA)	0.18	0.67
Outlet total pressure (barA)	0.67	1.08
Inlet total temperature (K)	3.12	7.26
Outlet total temperature (K)	7.26	11.34
Pressure Ratio (PR)	3.623	1.606
Corrected Mass Flow CMF (g/s)	28.79	31.44

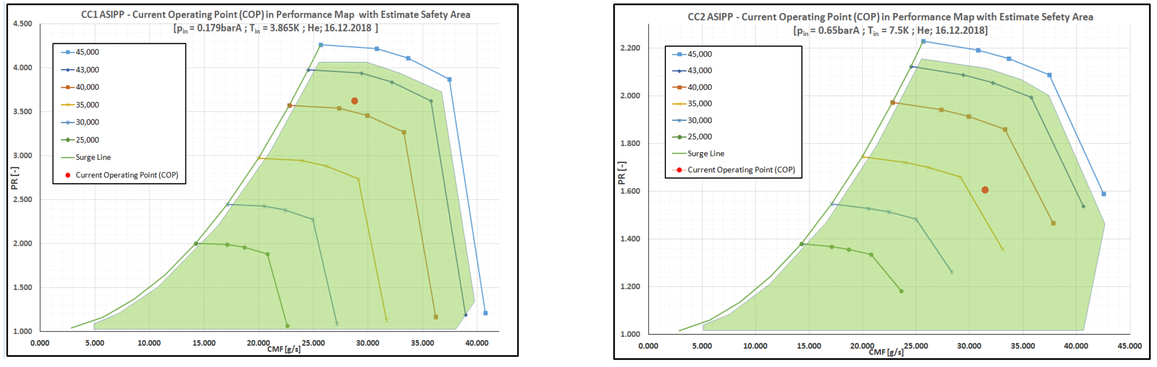

Figure 5. Actual operating point in performance maps of CC1 & CC2

5. Conclusion

- The commissioning results show that the subcooled helium system has a greater refrigeration capacity than design value, which achieve the expected target.
- The control programs of start and stop flow as well as emergency operation of two CCs have been tested. The performance maps with estimate safety area of two CCs were investigated, on which the actual operation parameters were in safe area and close to the design values.
- The control and commissioning experience can provide guidance to the future upgrading of EAST subcooled helium system.