Cryogenic system design for an electron-ion collider at Brookhaven National Laboratory

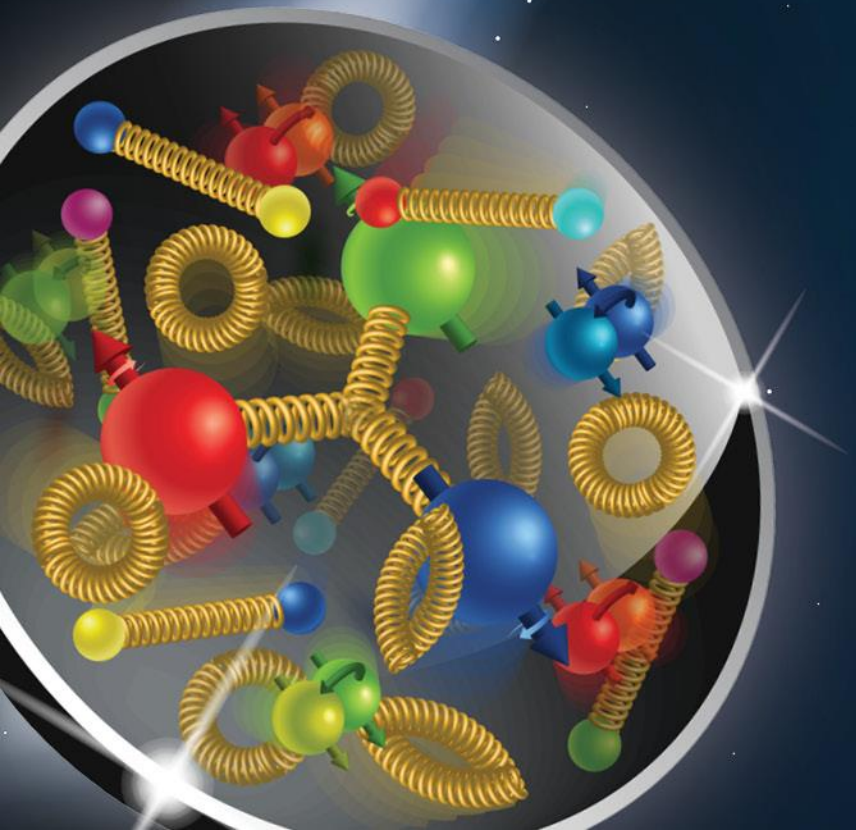

07/22/2019

Dhananjay Ravikumar

Electron Ion Collider – eRHIC

BROOKHAVEN NATIONAL LABORATORY
U.S. DEPARTMENT OF ENERGY | Office of Science

The Relativistic Heavy Ion Collider (RHIC)

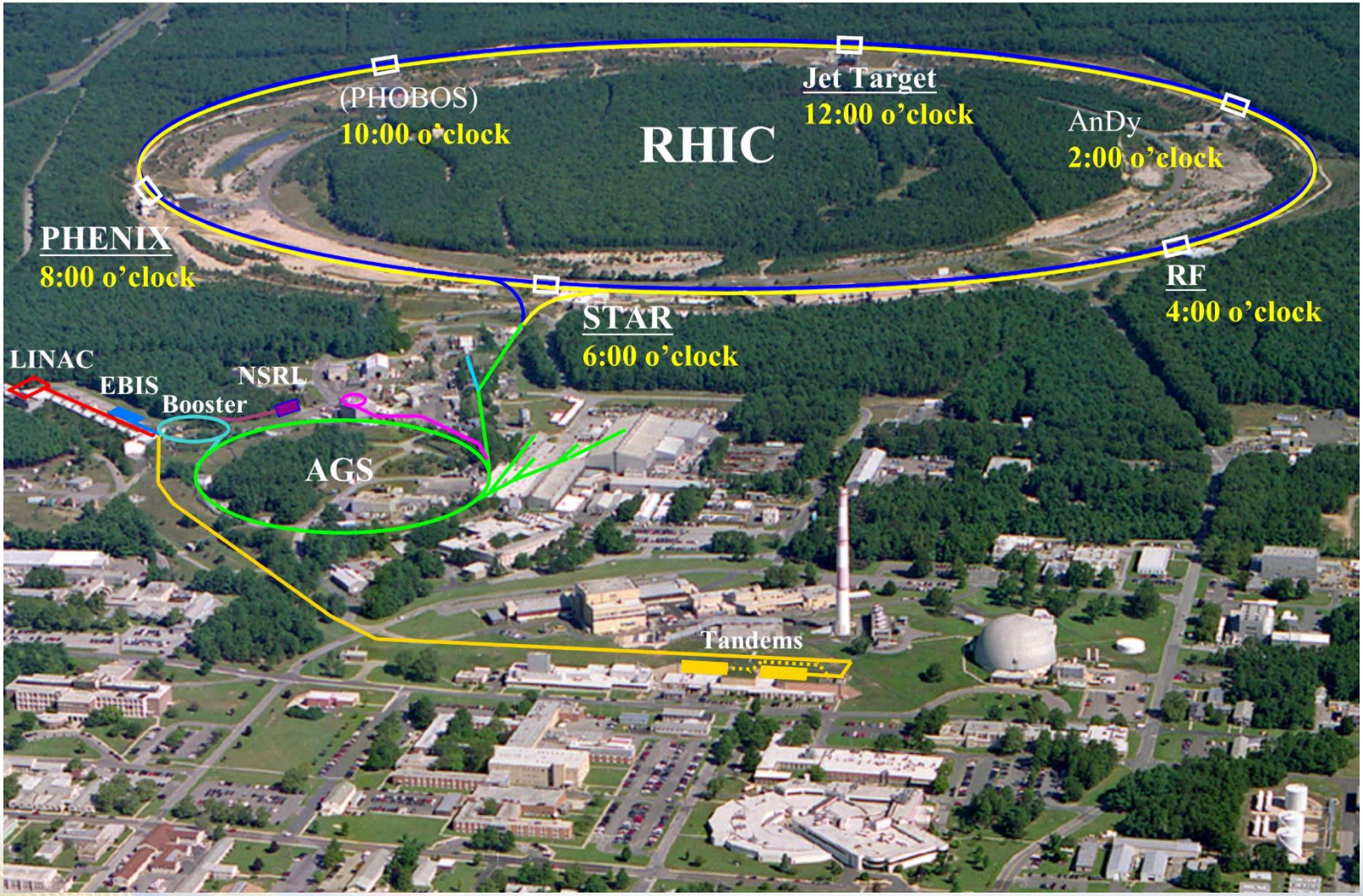

Upgrading the RHIC: eRHIC

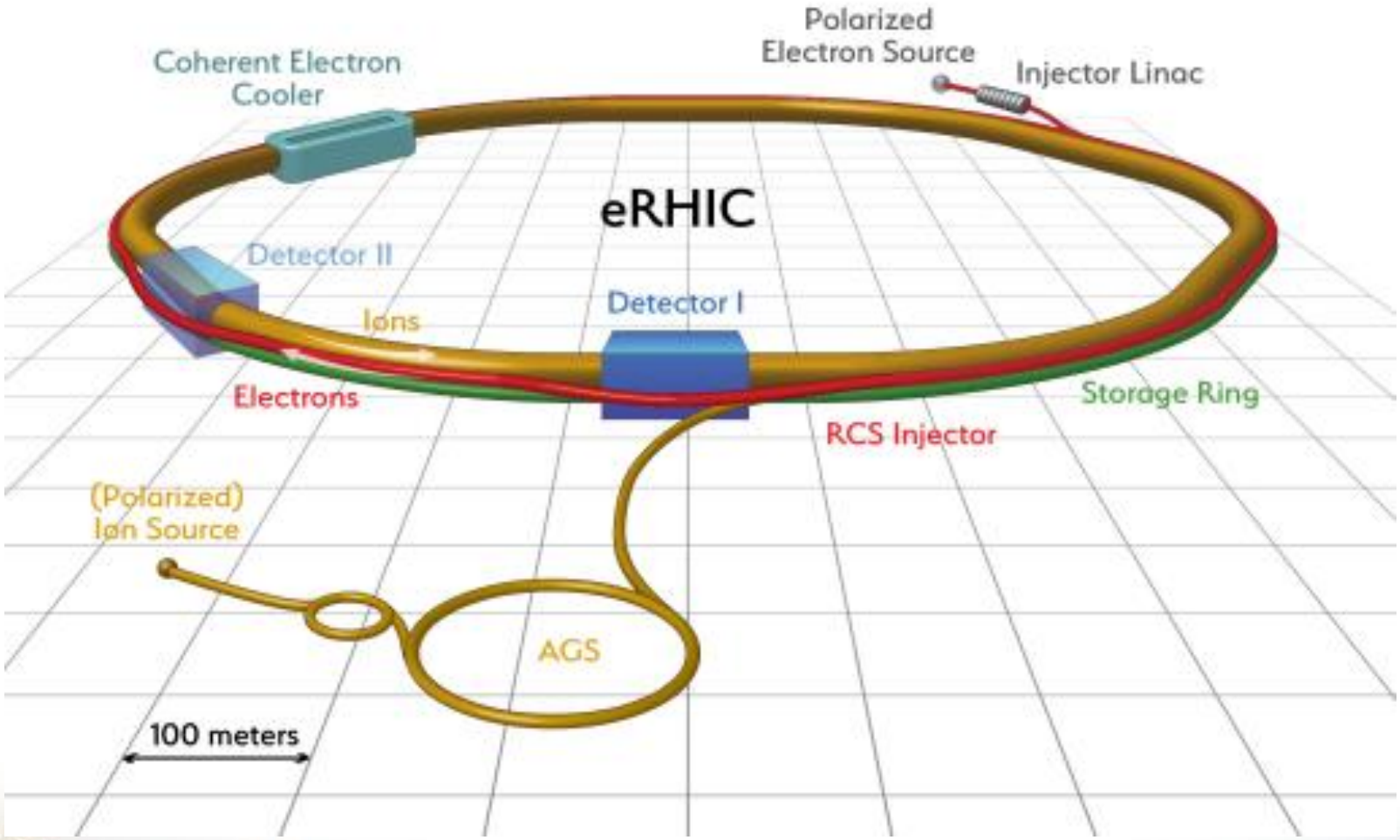

What needs to be done?

- New local cryogenic systems at:
  - IR 10, IR02 to cool accelerating SRF cavities
  - IR 06 to cool crab cavities
- Modifications to existing RHIC cryogenic system
  - Mainly: Heat exchangers, expander pods

Baseline system design for IR10, IR02

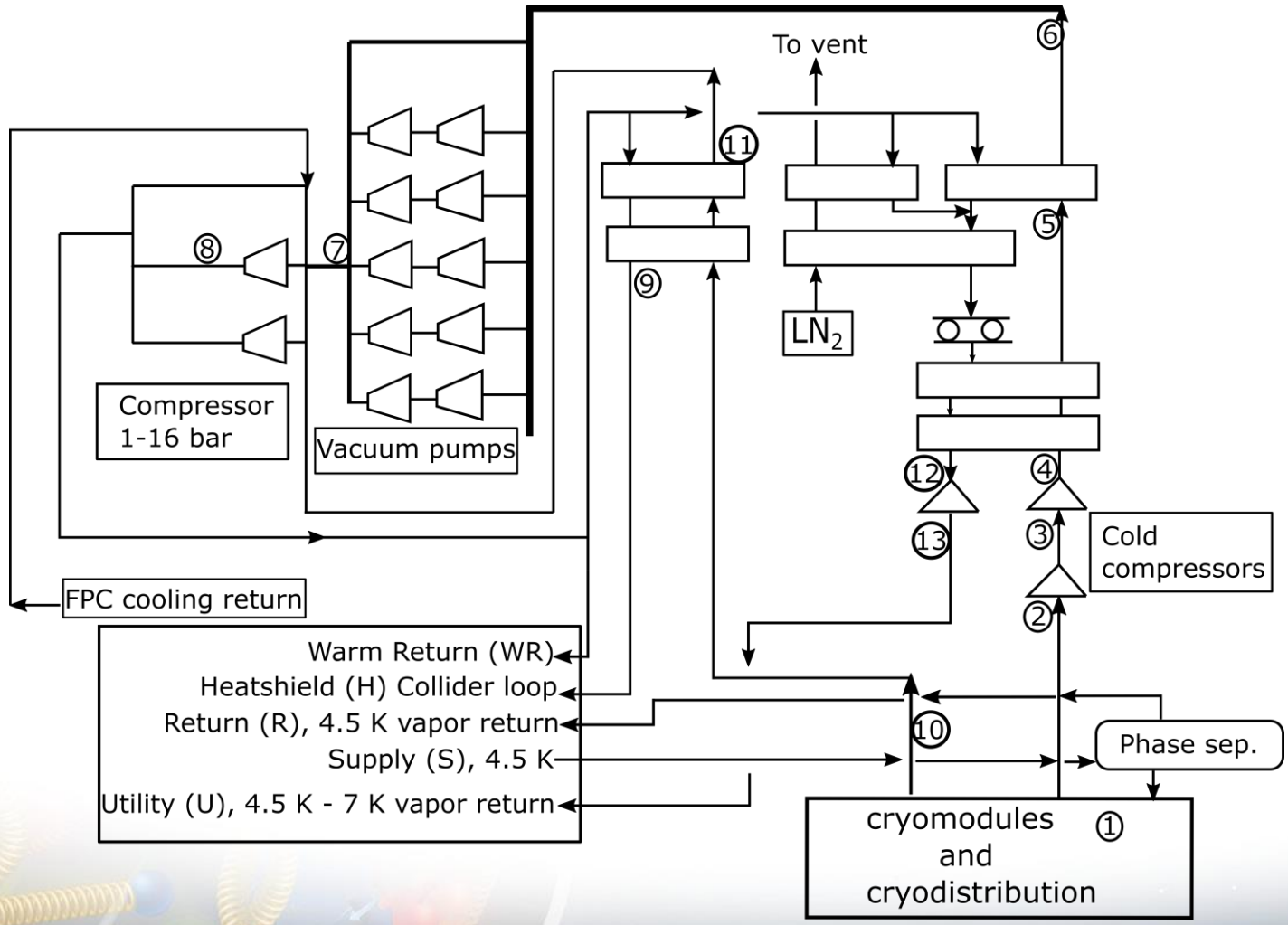

Estimated loads for IR10

Subsystem	Modules Qty	2.0K Refrigeration [W]	4.5K Refrigeration [W]	FPC 4.5K-300K [g/sec]	L.P. Intercept 4.5K-80K [g/sec]
eSR-591 MHz 2-cell	14	420	140	4.2	4.2
eSR-1773 MHz 5-cell	5	75	50	0.8	1.5
RCS-591 MHz 5-cell	3	144	30	0.6	0.9
Hadron-591MHz 5-cell	2	84	20	0.4	0.6
Cryo-distribution			75		0.7
Margin		153	315		
Total		723	630	6	8
Carnot Work		107 kW	24 kW	41 kW	46 kW

Estimated loads for IR02

Subsystem	Modules Qty	2.0K Refrigeration [W]	4.5K Refrigeration [W]	FPC 4.5K-300K [g/sec]	L.P. Intercept 4.5K-80K [g/sec]
ERL-591 MHz 5-cell	8	528	160	2.4	2.4
ERL-1773 MHz 5-cell	3	84	45	0.5	0.9
Cryo-distribution			23		
Margin		171	25	1.4	1.6
Total		612	253	4.3	4.9
Carnot Work		91 kW	18.5 kW	29.3 kW	22.6 kW

Baseline system design for IR06

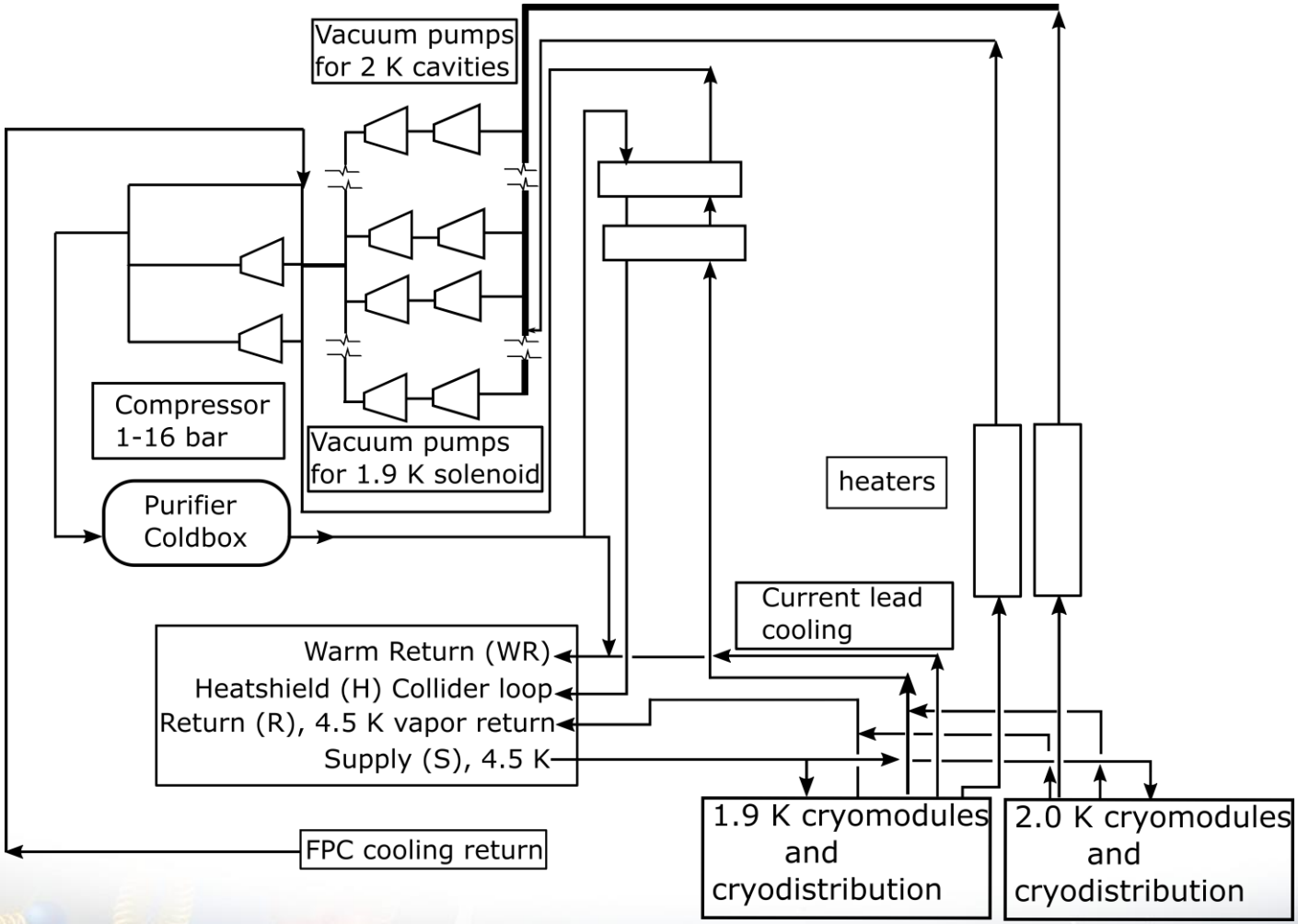

Estimated loads for IR06

Subsystem	Qty	2.0K Refrigeration [W]	4.5K Refrigeration [W]	FPC/Beamline 4.5K-300K [g/sec]	L.P. Intercept 4.5K-80K [g/sec]
Hadron Crabs	6	102	90	1.8	3.6
Electron Crabs	2	34	30	0.6	1.2
Cryo-distribution			70		1.2
Margin		40			
Total	8	176	190	2.4	4.8

Subsystem	4.5K Refrigeration [W]	4.5K-300K Liquefaction [g/sec]	Shield 45K-80K [W]	L.P. Intercept 4.5K-80K [g/sec]
IR Region magnets	100	5.3	450	
IR Region HC magnets		20	70	
Solenoids e-Beam	256	2		3.2
SRF Crabs	190	10		4.8
Detector Solenoid	70	1.0		1.0
Cryo-distribution	70			1.2
Total	135	40	450	9.2

Future work

- Experimenting with other configurations to find the most exergetically efficient way of producing local cooling.
- Performing trade off studies between liquefaction and refrigeration loads for the IP10 and IP02 systems
- Engineering all of the subsystems and components.