TIMING RESOLUTION OF SIPM TECHNOLOGIES BEFORE AND AFTER NEUTRON IRRADIATION

2019.07.10 I **S. KUMAR[1]**, L. NIRAULA[1], M. HERZKAMP[1], D. ARUTINOV[1], S. VAN WAASEN[1,2]

[1]CENTRAL INSTITUTE OF ENGINEERING, ELECTRONICS AND ANALYTICS ZEA-2 – ELECTRONIC SYSTEMS, FORSCHUNGSZENTRUM JÜLICH GMBH, GERMANY

[2]FACULTY OF ENGINEERING, COMMUNICATION SYSTEMS (NTS), UNIVERSITY OF DUISBURG-ESSEN, GERMANY

Email: s.kumar@fz-juelich.de

iWoRiD 2019

July 7-12 : Kolymbari, Crete, Greece

MOTIVATION

Neutron Time of Flight Scattering:

- Study neutron-nucleus interaction
- Conservation of momentum
- Kinetic energy determination
- Time of fly measurement

Scientific Applications:

- Material science
- Medicine
- Chemistry etc.

State-of-the-art detector : ^{3}He tubes

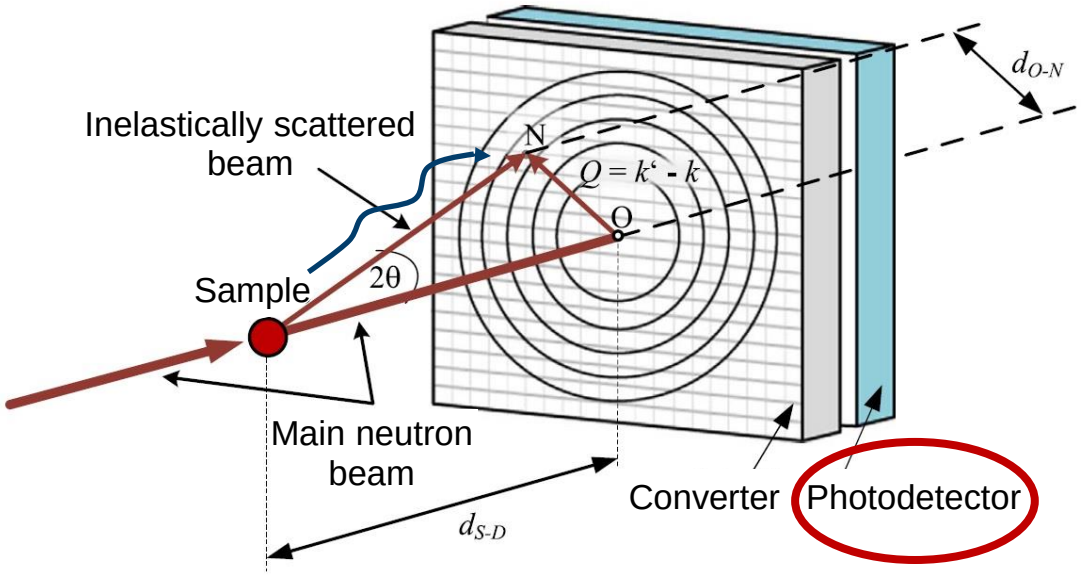

Schematic of a Small Angle Neutron Scattering (SANS) experiment with scintillation detector

Reproduced from: D. Durini *et* al., Nucl. Instr. and Meth. A 835, p. 99 (2016)

Photodetectors in scintillation based detector:

- Photomultiplier Tube (PMT)
- **Silicon Photomultipliers (SiPM)**

SILICON PHOTOMULTIPLIERS (SIPM)

- Semiconductor photo sensor working in Geiger mode
- Array of Single Photon Avalanche Diode (SPAD)
- Parallel connected SPAD current output

Photodetector	SiPM	PMT
Form factor	☺	☹
Operating voltage	☺ ~Tens of V	☹ ~ Kilos of V
Magnetic field insensitivity	☺ Up to ~ T	☹ Up to ~mT
Time resolution	☺ ~ tens of ps	☹ ~hundreds of ps
Radiation hardness	?	☺

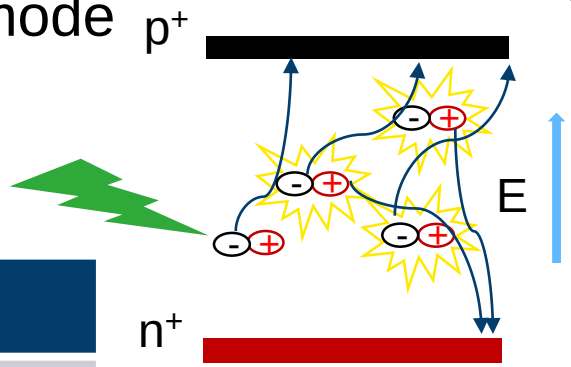

Conversion of light into current in SPAD

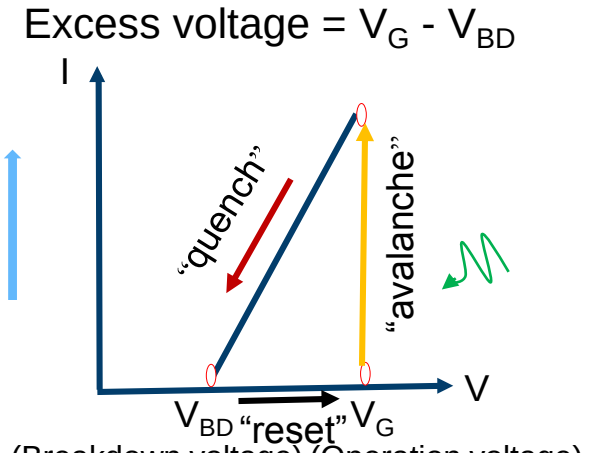

Current vs. Voltage characteristics of SPAD

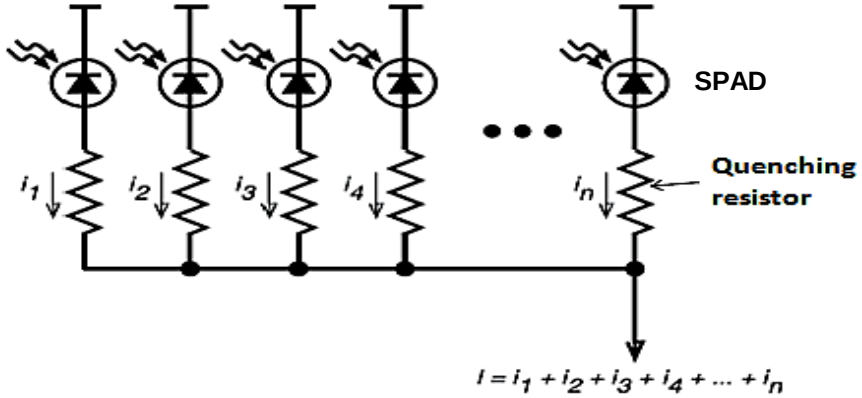

SiPM output as sum of SPAD current

RADIATION HARDNESS OF SIPM

Concern of prolonged neutron exposure to SiPM :

- Increase in electron concentration

$$^{30}Si + n \longrightarrow {}^{31}Si \longrightarrow {}^{31}P \text{ (donor atom)} + \beta$$

(Nuclear transmutation doping)

- Increase in defects in silicon crystal

$$|I_{dark}| = \alpha_p \left\{ qA_n \left(\frac{n_i^2}{N_D} \sqrt{\frac{D_p}{\tau_{r\_p}}} + N_{def} W_{SCR} \sigma_n c_n T^2 e^{\left(-\frac{E_c - E_T}{k_B T}\right)} \right) \right\}$$

D. Durini *et* al., Nucl. Instr. and Meth. A 835, p. 99 (2016)

Increase in dark current (noise) of SiPM?
Effect on Photon Detection Efficiency (PDE) of SiPM?
Effect on Timing Resolution (TR) of SiPM?

SIPM MODULES UNDER INVESTIGATION

Analog SiPM arrays

Digital SiPM array

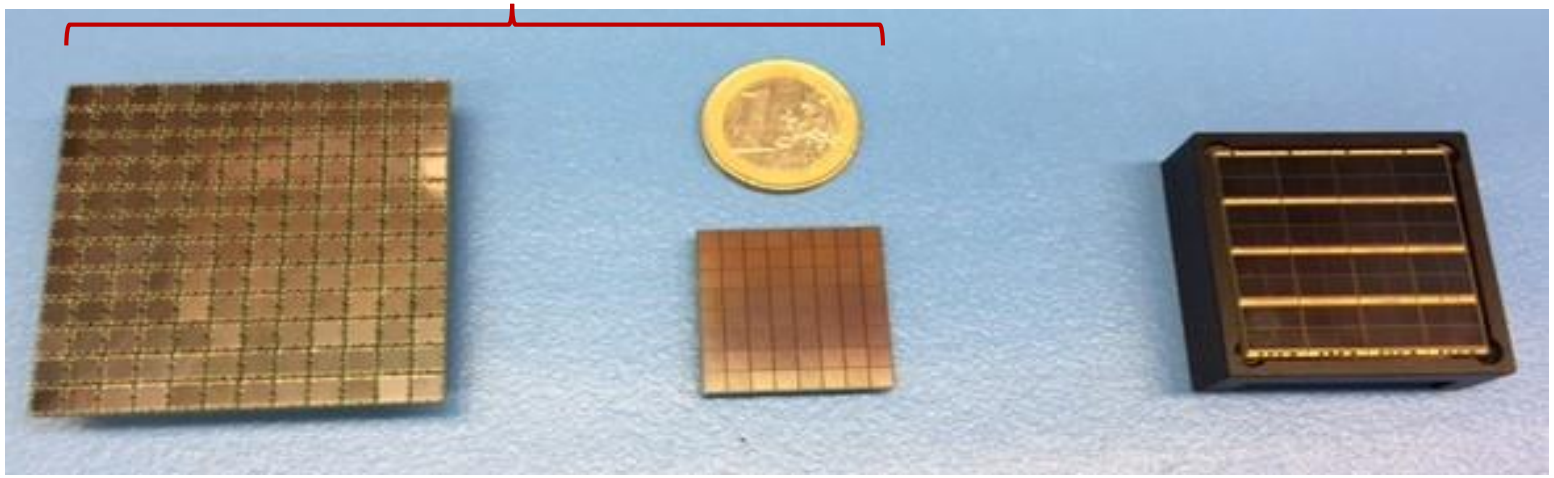

SensL C-series (12×12)

Active area: 3mm×3mm
SPAD size: 35µm×35µm
Breakdown voltage: ~25V

Hamamatsu (8×8)

Active area: 3mm×3mm
SPAD size: 50µm×50µm
Breakdown voltage: ~65V

Philips Digital Photon Counter (8×8)

Active area: 3.8mm×3.2mm
SPAD size: 59.4µm×64µm
Breakdown voltage: ~23V

Set up for SiPMs neutron irradiation

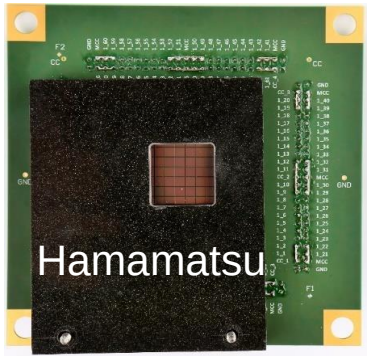

SiPMs covered with B_4C, during irradiation with neutrons (**λ = 5Å, E = 3.27meV**) up to a dose of **6×10^{12} n/cm²**, performed in 2015 at the KWS-1 instrument at *Heinz Maier Leibnitz Zentrum (MLZ)*, Germany

PREVIOUS STUDIES

Under 10 year of constant operation (estimated total neutron dose ~**10^{11} n/cm^2**) in a typical small angle neutron scattering (SANS) experiments:

SiPM Arrays	Increase factor in dark current (in 2016)	Relative change (%) in PDE (in 2018)	Received overall neutron dose (× 10^{12} n/cm^2)
Philips DPC	1.5	0	1.85
SensL	1.3	-4.9	1.9
Hamamatsu	1.1	-11.3	6

Table: Comparison of SiPM performance after irradiation with neutron (λ = 5Å)

D. Durini *et* al., Nucl. Instr. and Meth. A 835, p. 99 (2016)
S. Kumar *et* al., JINST, 13C01042 (2018)

Increase in dark current (noise) of SiPM? ☺
Change in Photon Detection Efficiency (PDE) of SiPM? ☺
Change in Timing Resolution (TR) of SiPM**?**

TIMING RESOLUTION OF SIPM

Jitter in time for the arrival of photon on SiPM and its detection

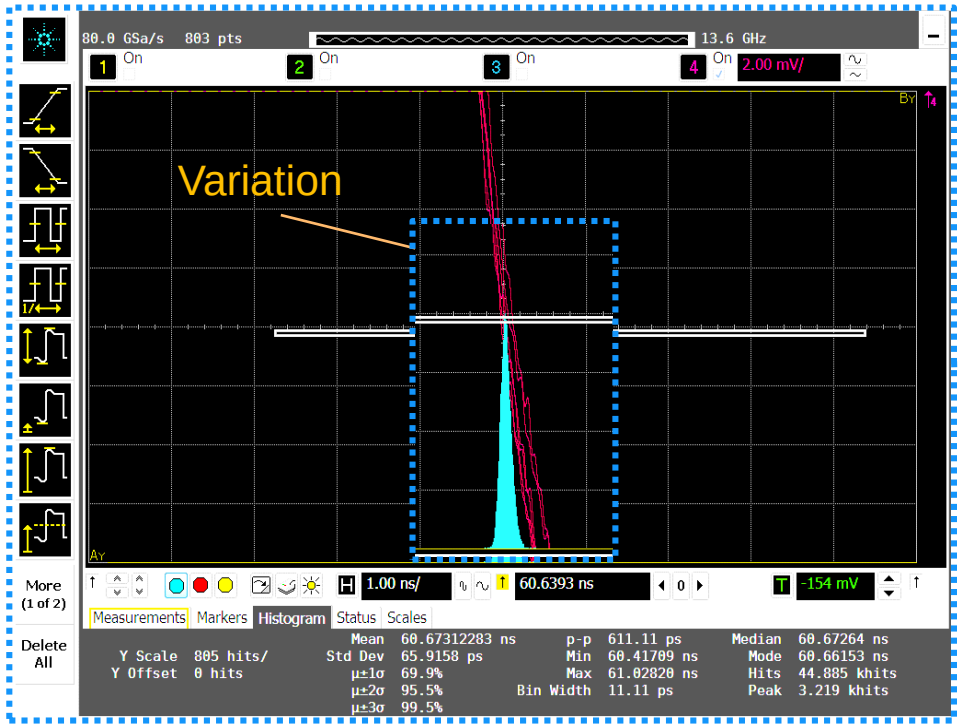

Histogram of variation of output pulse with time:

σ of this histogram is TR

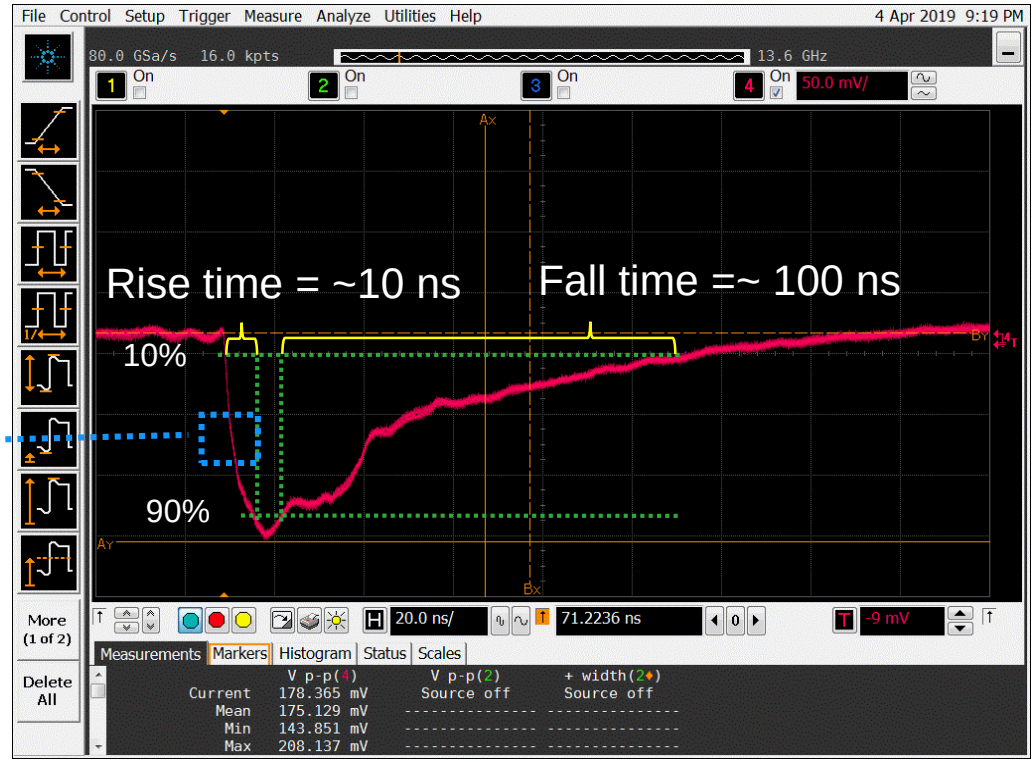

Temporal characteristics of an SensL output signal recorded in oscilloscope

TIME RESOLUTION MEASUREMENT

- Correlation of SiPM signal with a reference (sync) signal
- Thresholding
- Histogramming
- Measurement of σ

Approaches:

- Time Correlated Single Photon Counting (TCSPC) device:
  Reference signal rise time not compatible
- Oscilloscope

Fig: Illustration of time resolution measurement using oscilloscope.

MEASUREMENT SETUP

***Pilas* Laser Diode**
Central wavelength: 403 nm
Pulse duration: 45 ps
Pulse peak power: 300 mW

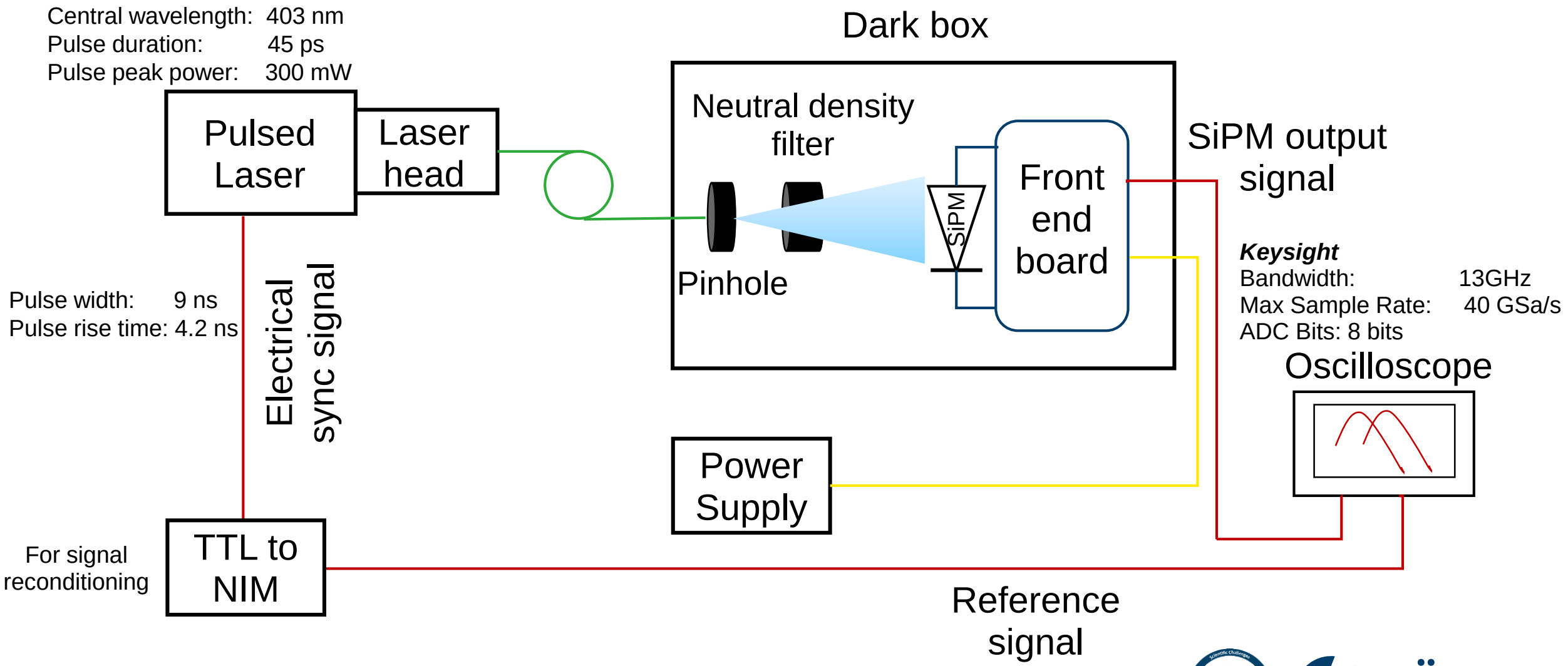

MEASUREMENT

$$\sigma_{measured} = \sqrt{\sigma_{SiPM}^2 + \sigma_{setup}^2 + \sigma_{laser}^2 + \sigma_{noise}^2}$$

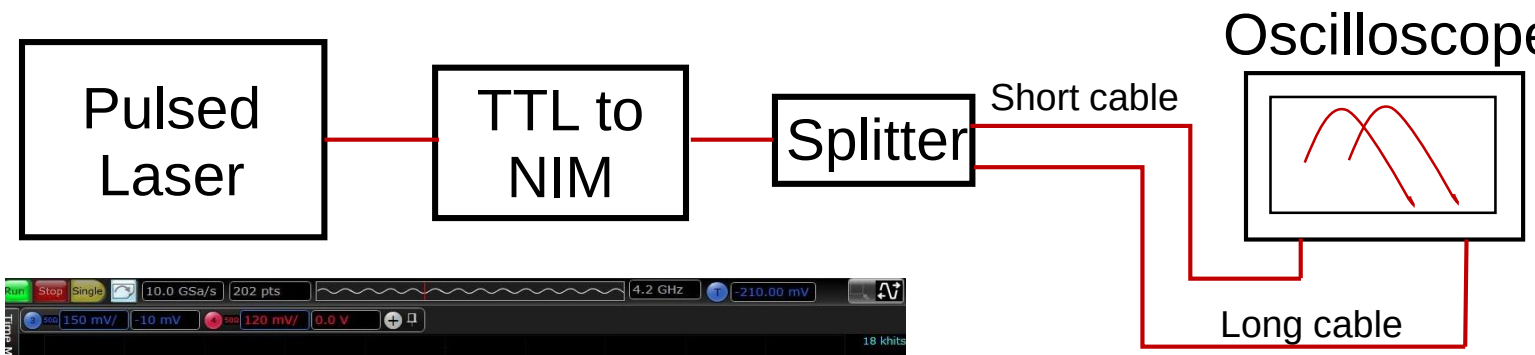

Laser
- Optical pulse width = 3ps
- Electronic to optical signal jitter

Recorded image in oscilloscope for the time resolution measurement of the set up.

Short cable : Trigger signal
Long cable : TR test signal
Thresholding : 50%
$\sigma_{setup} =$ 26ps

$$\sigma_{noise} = \frac{V_{noise}}{\frac{dV}{dt}}$$

RESULT

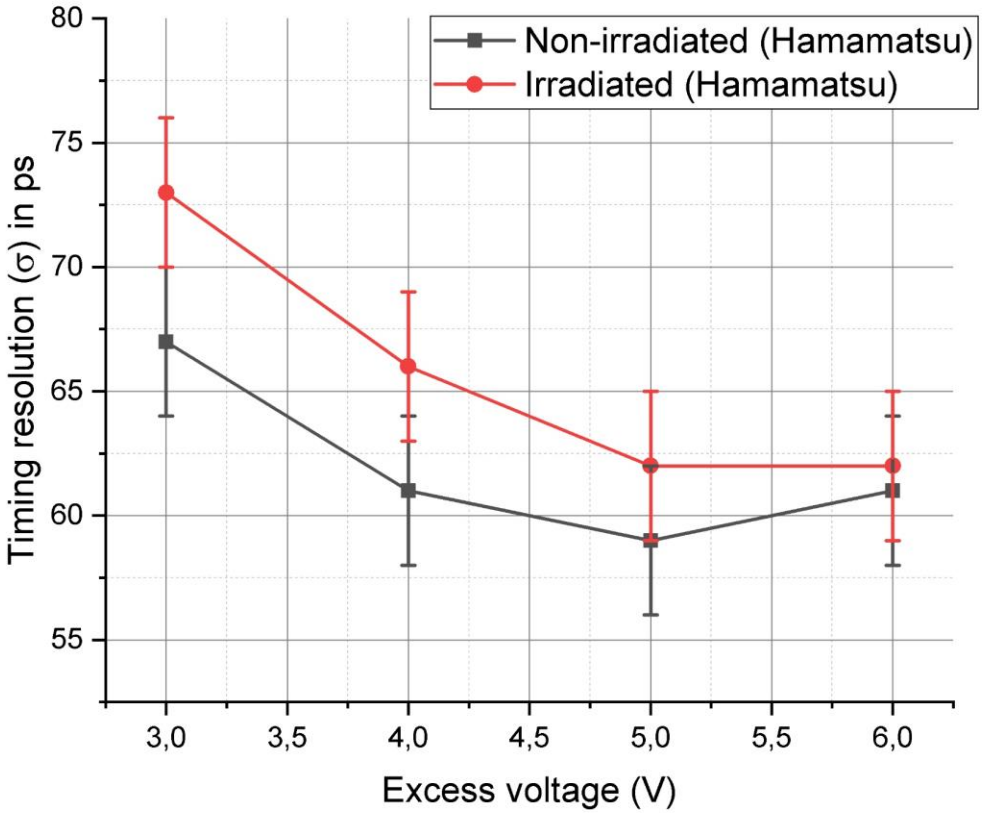

Comparison of four pixels of **Hamamatsu SiPM** at 21°C and at 50% thresholding

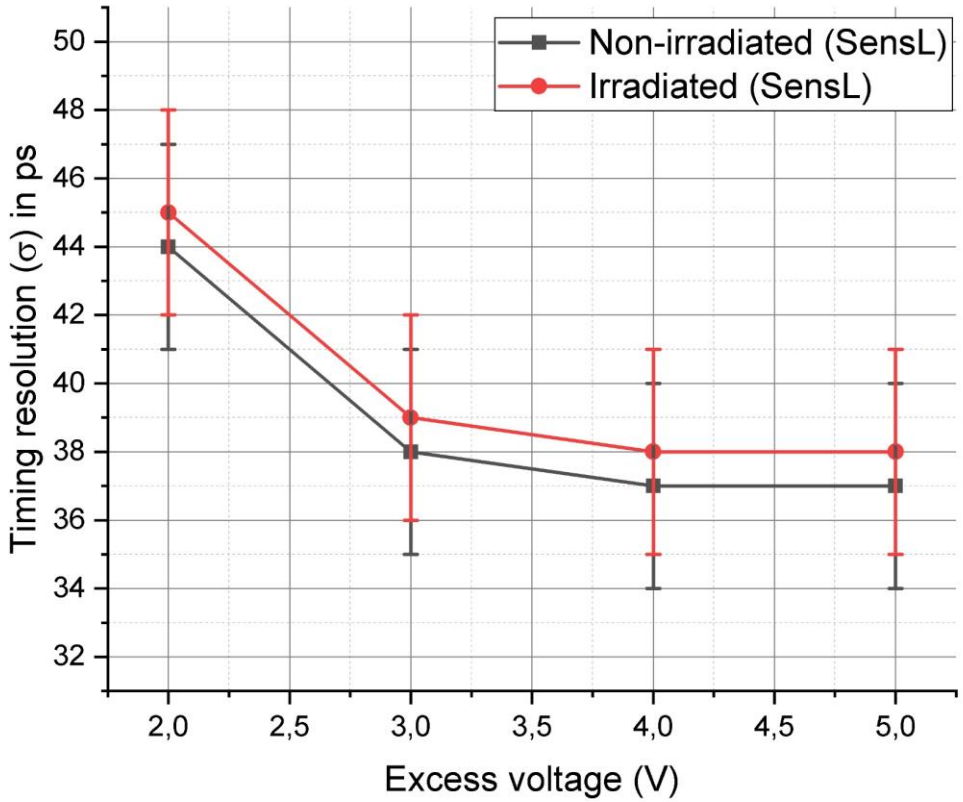

Comparison of four pixels of **SensL SiPM** at 21°C and at 50% thresholding

CONCLUSION AND OUTLOOK

- SiPMs are feasible for cold neutron time of flight applications (ps range)
- Small degradation in TR observed due to surface damage leading to noise increment

SiPM arrays under investigation	Increase factor in Dark Current (2015)	Decrease (%) in PDE (2016)	Timing Resolution		Received overall neutron (5Å) dose (× 10^{12} n/cm^2)
			Non-Irradiated	Irradiated	
SensL	1.3	4.9	38ps	39ps	1.9
Hamamatsu	1.1	11.3	67ps	73ps	6

Table: Quantitative comparison of performance of SiPM technologies after neutron (5Å) irradiation (6×10^{12} n/cm^2). No significant change in TR at 3V excess voltage is observed under measurement uncertainty of 4ps.

- Investigation of TR change for Philips (digital SiPM) will be reported in near future
- Interesting to study the changes within shorter time after neutron irradiation

Thanks for your attention!