XXIII Swiss NMR Symposium

CERN, Genève, 14 janvier 2020

Spin thermometry: deuterium NMR spectra allow one to measure millikelvin spin temperatures

Behdad Aghelnejad, Sina Marhabaie, Mathieu Baudin, Diego Carnevale, Geoffrey Bodenhausen

Ecole Normale Supérieure (ENS)

Talk 12 minutes + discussion 3 minutes

Dissolution DNP at ENS

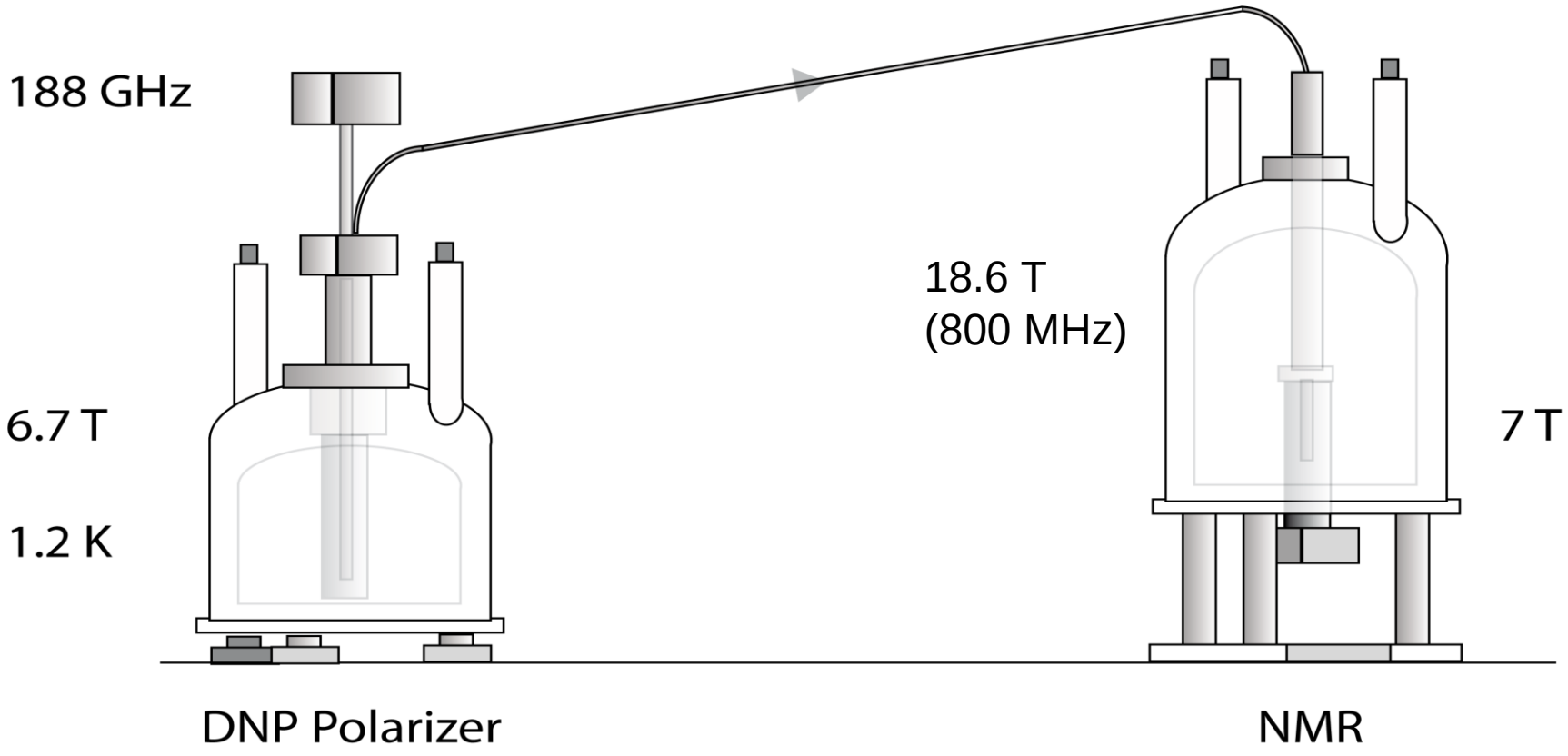

Some applications of D-DNP

1- Kinetics of enzymatic reactions *in vitro* and *in cellulo*

(cancer diagnosis?)

2- Kinetics of *very slow* reactions, using long-lived states

(fumarate-malate)

3- Signal enhancement of proteins

("HYPEX" with hyperpolarized HDO)

4- Drug screening

Multinuclear Hyperpolarization: new probe for frozen bullets

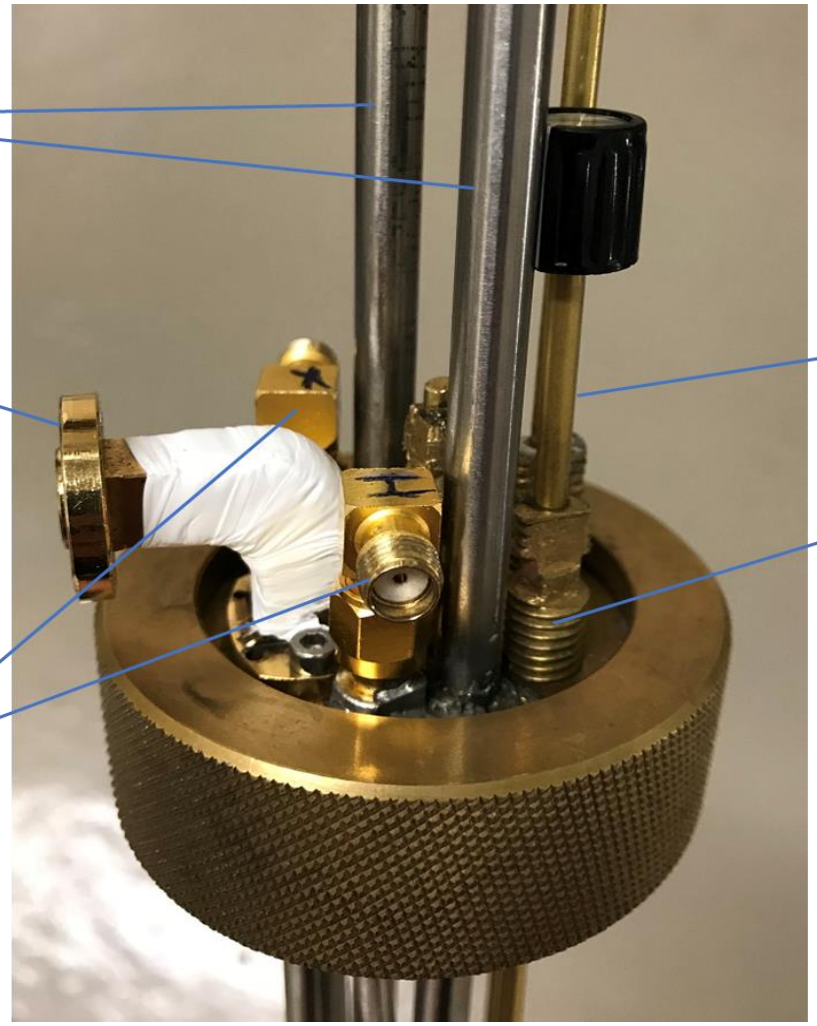

Tuning and matching in superfluid helium

Sina Marhabaie
Behdad Aghelnejad

A Low-Temperature Broadband NMR Probe for Multinuclear Cross-Polarization

Behdad Aghelnejad,*[a, c] Geoffrey Bodenhausen,[a] and Sina Marhabaie*[a, b]

ChemPhysChem **2019**, *20*, 2830 – 2835

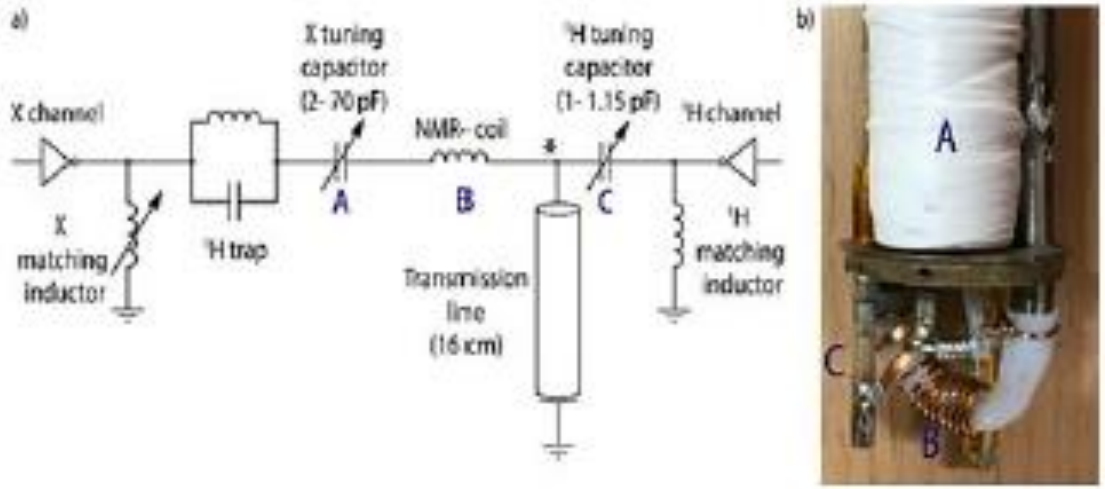

Multinuclear probe immersed in superfluid helium at 1.2 K

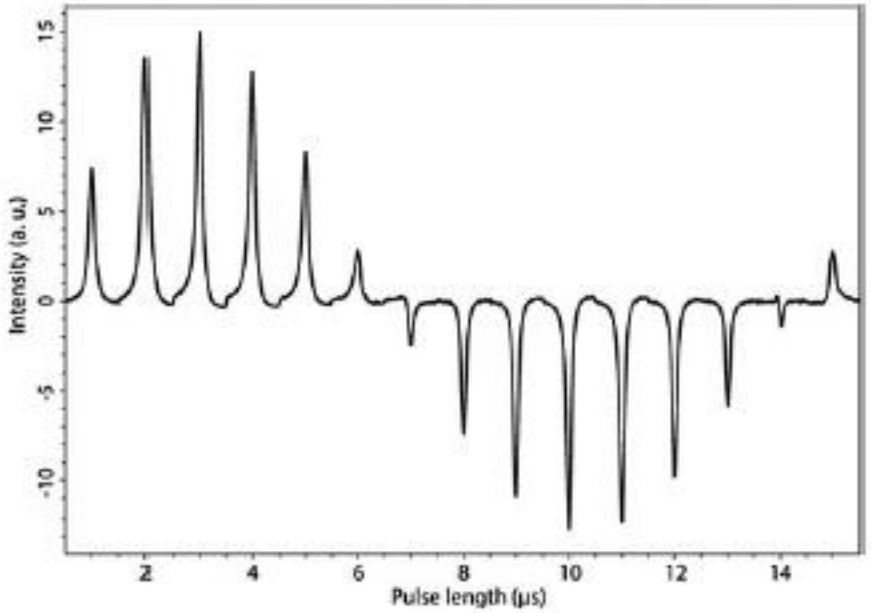

^{1}H nutation signals (90 W, 4 K): good rf homogeneity

NMR spectra of various nuclei with/without DNP at 4 K and 6.7 T

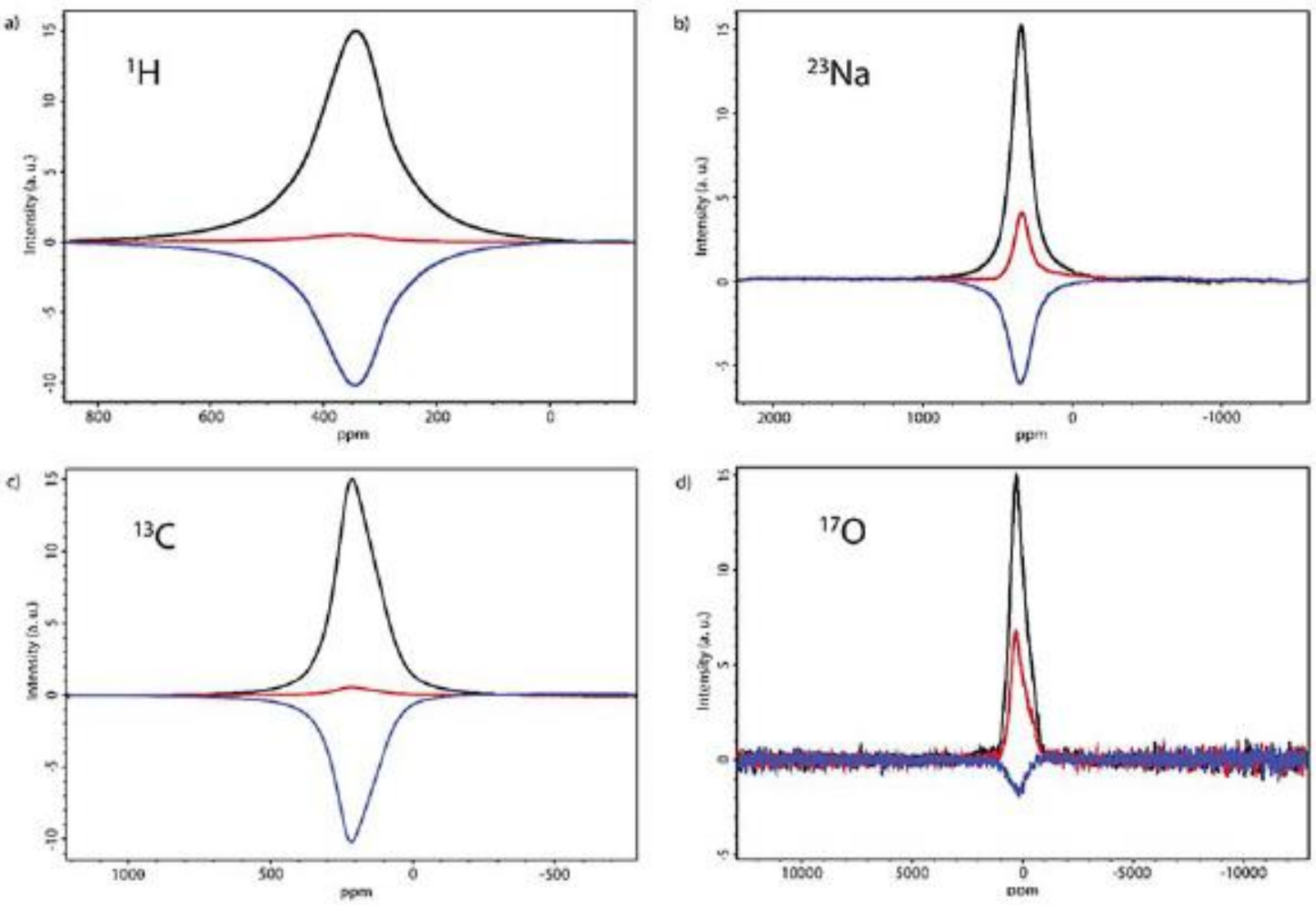

Red: no microwave irradiation
black: positive DNP (187.9 GHz)
blue: negative DNP (188.38 GHz)

50% ethanol-d_6
40% D_2O
10% $H_2{}^{17}O$
1.5 M ^{13}C-Sodium acetate
1 M ^{15}N-Urea
40 mM TEMPOL

Determine polarization P(S)
or spin temperature T_{spin}(S)
from on/off ratio of signal intensities

Has this asymmetry been seen before?

Asymmetric NMR spectra of ^{2}H with/without DNP at 4 K and 6.7 T

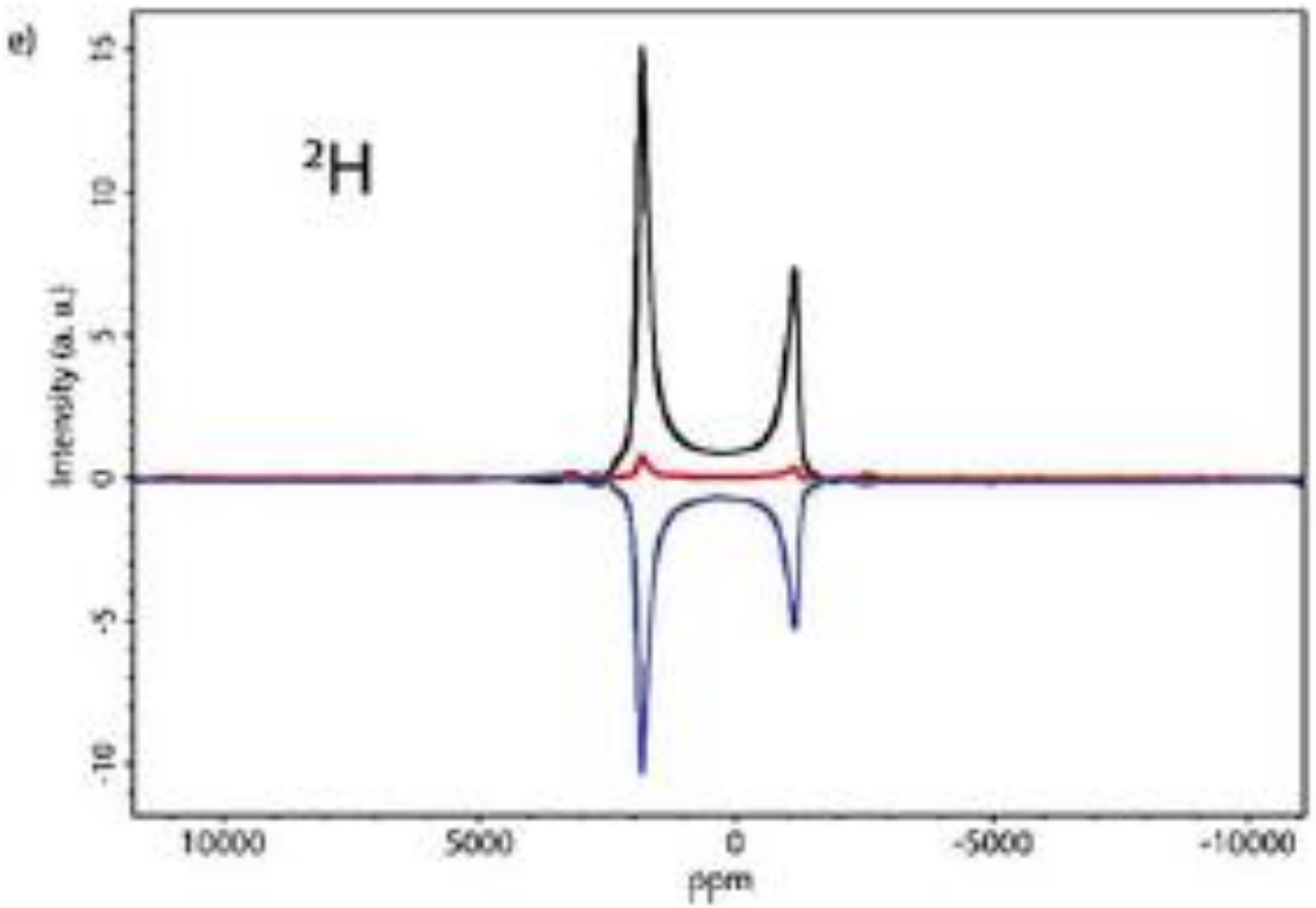

Red: no microwave irradiation
black: positive DNP (187.9 GHz)
blue: negative DNP (188.38 GHz)

50% ethanol-d_6
40% D_2O
10% $H_2{}^{17}O$
1.5 M ^{13}C-Sodium acetate
1 M ^{15}N-Urea
40 mM TEMPOL

Determine polarization P(S)
or spin temperature T_{spin}(S)
from ratio of signal intensities

Challenges in preparing, preserving and detecting *para*-water in bulk: overcoming proton exchange and other hurdles

Has this asymmetry been seen before?

Daniele Mammoli,*[a] Nicola Salvi,[a] Jonas Milani,[a] Roberto Buratto,[a] Aurélien Bornet,[a] Akansha Ashvani Sehgal,[bcd] Estel Canet,[abcd] Philippe Pelupessy,[bcd] Diego Carnevale,[e] Sami Jannin[af] and Geoffrey Bodenhausen*[abcd]

Phys. Chem. Chem. Phys., 2015, **17**, 26819–26827

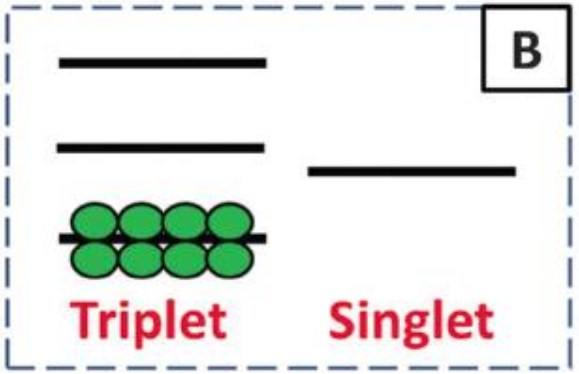

H_2O

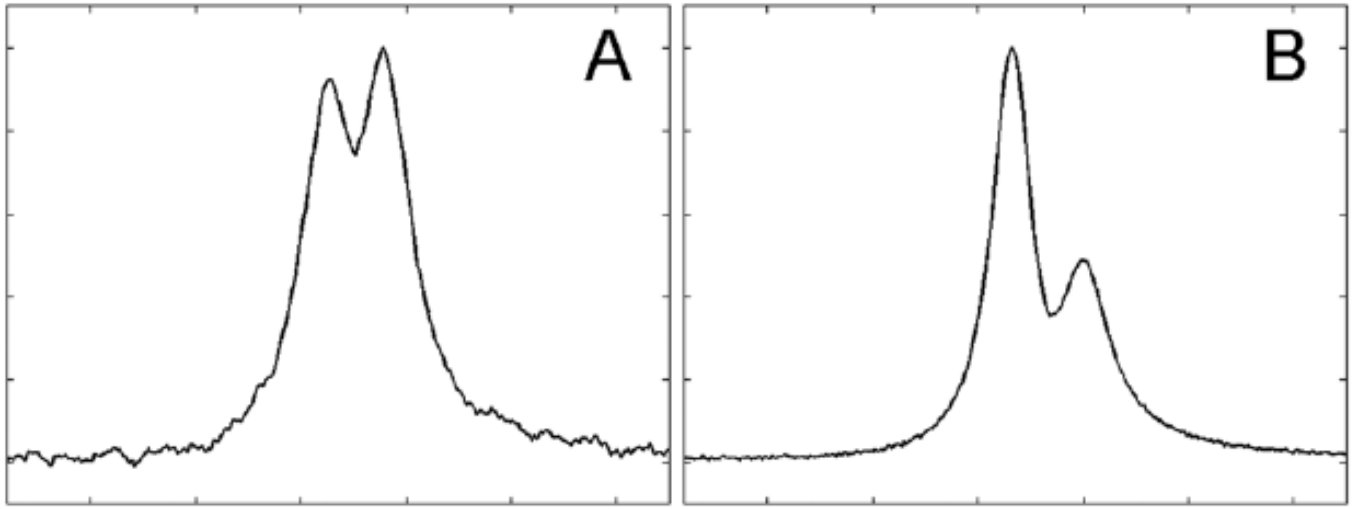

Fig. 2 Experimental proton spectra of H_2O diluted in DMSO doped with 50 mM TEMPOL and frozen at *ca.* 1.2 K in a field of 6.7 T,

Has this asymmetry been seen before?

Proton Spin–Spin and Spin–Lattice Relaxation in $CaSO_4 \cdot xH_2O$ below 1 K

P. KUHNS, O. GONEN, AND J. S. WAUGH

JOURNAL OF MAGNETIC RESONANCE **82**, 231–237 (1989)

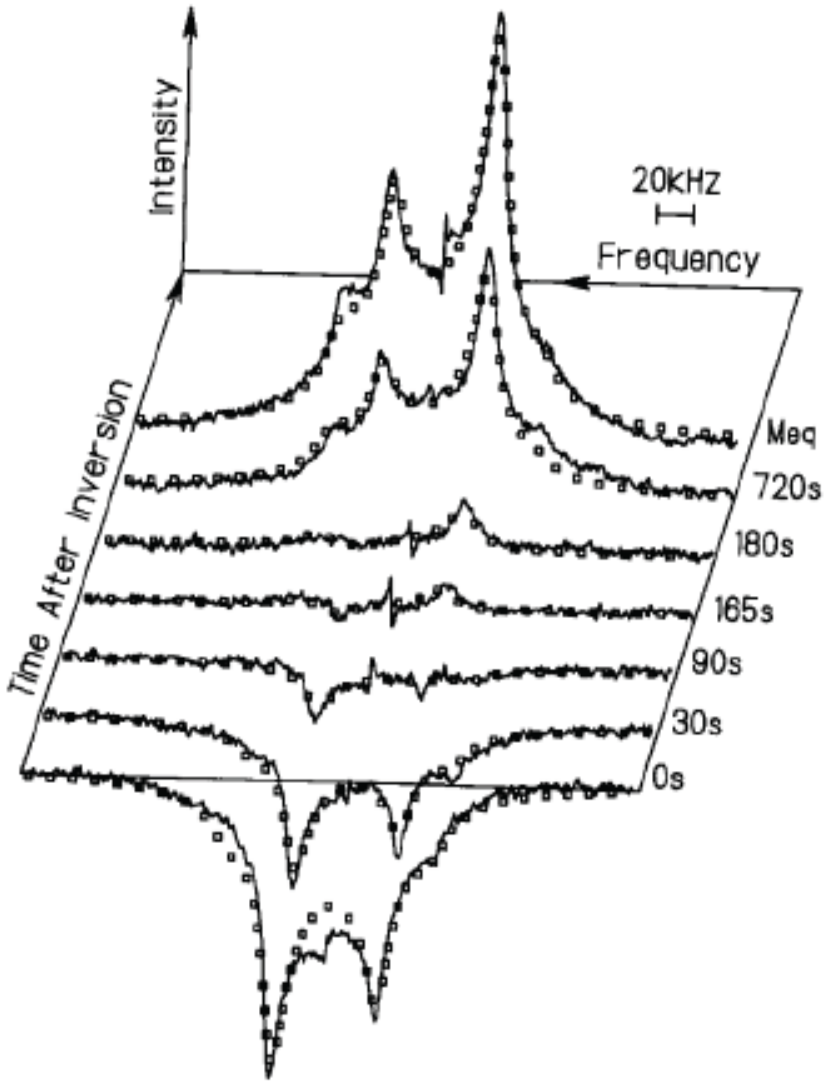

ASYMMETRY OF FIELD-PERTURBED NQR SPECTRA: A NEW ULTRA-LOW TEMPERATURE THERMOMETER?*

P.M. ANDERSEN, N.S. SULLIVAN, M. RALL and J.P. BRISON

Has this asymmetry been seen before?

Physica B 169 (1991) 453-454

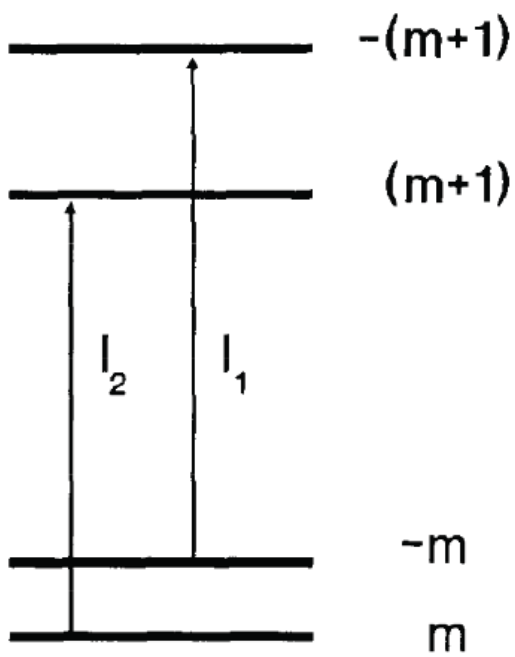

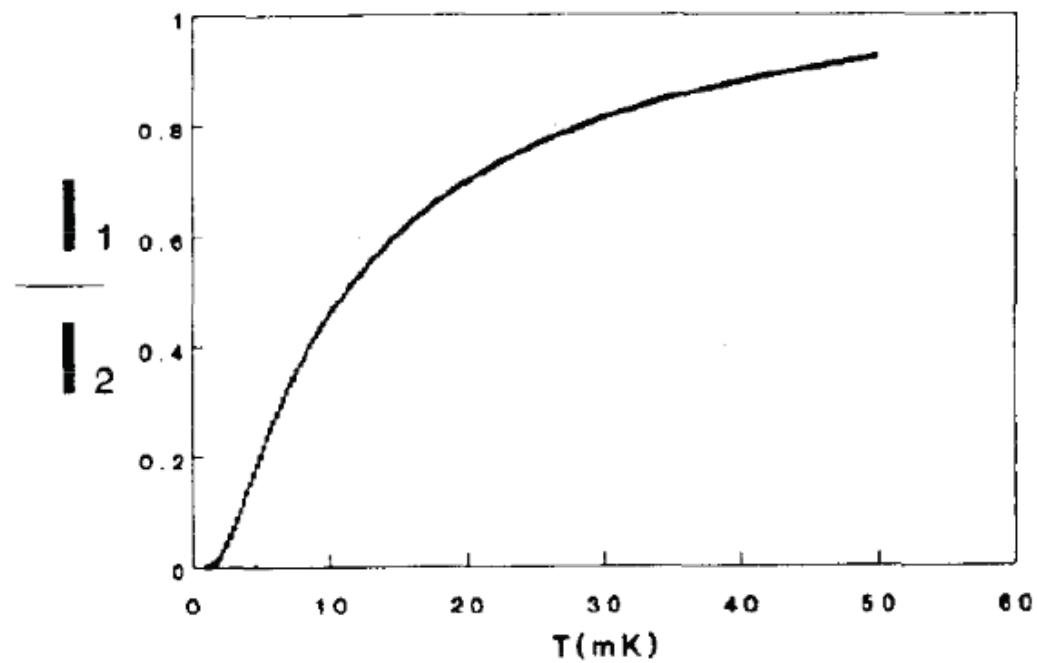

FIGURE 3.
Temperature dependence of the asymmetry of the $m = \pm 3/2 \rightarrow \pm 5/2$ transitions for ^{127}I in solid ICl.

NMR spectra of ^{2}H (spin S = 1) with quadrupole coupling in a frozen sample at T_{spin} = 0

Only one "wing" of Pake pattern excited if one uses rf pulses with small nutation angles

$$\rho_{eq} = \begin{pmatrix} 2 & 0 & 0 \\ 0 & 0 & 0 \\ 0 & 0 & 0 \end{pmatrix}$$

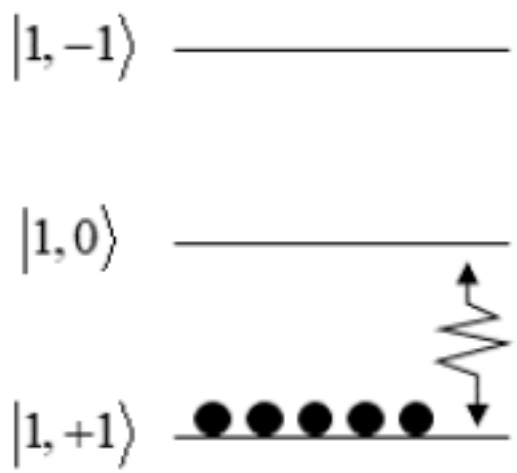

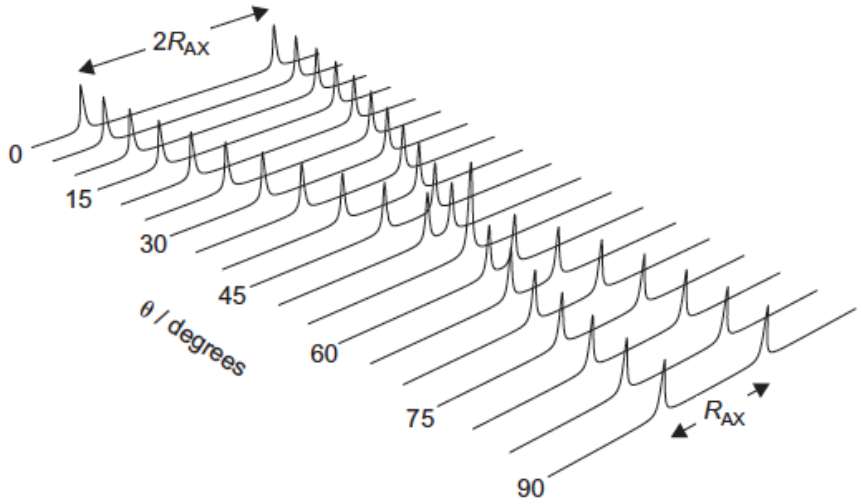

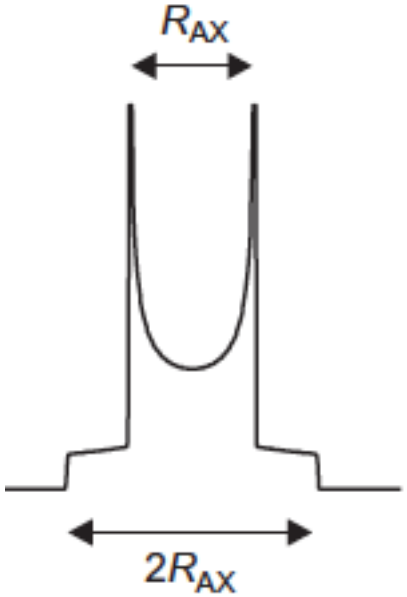

Two “wings” of ^{2}H Pake pattern excited by rf pulses with increasing nutation angles

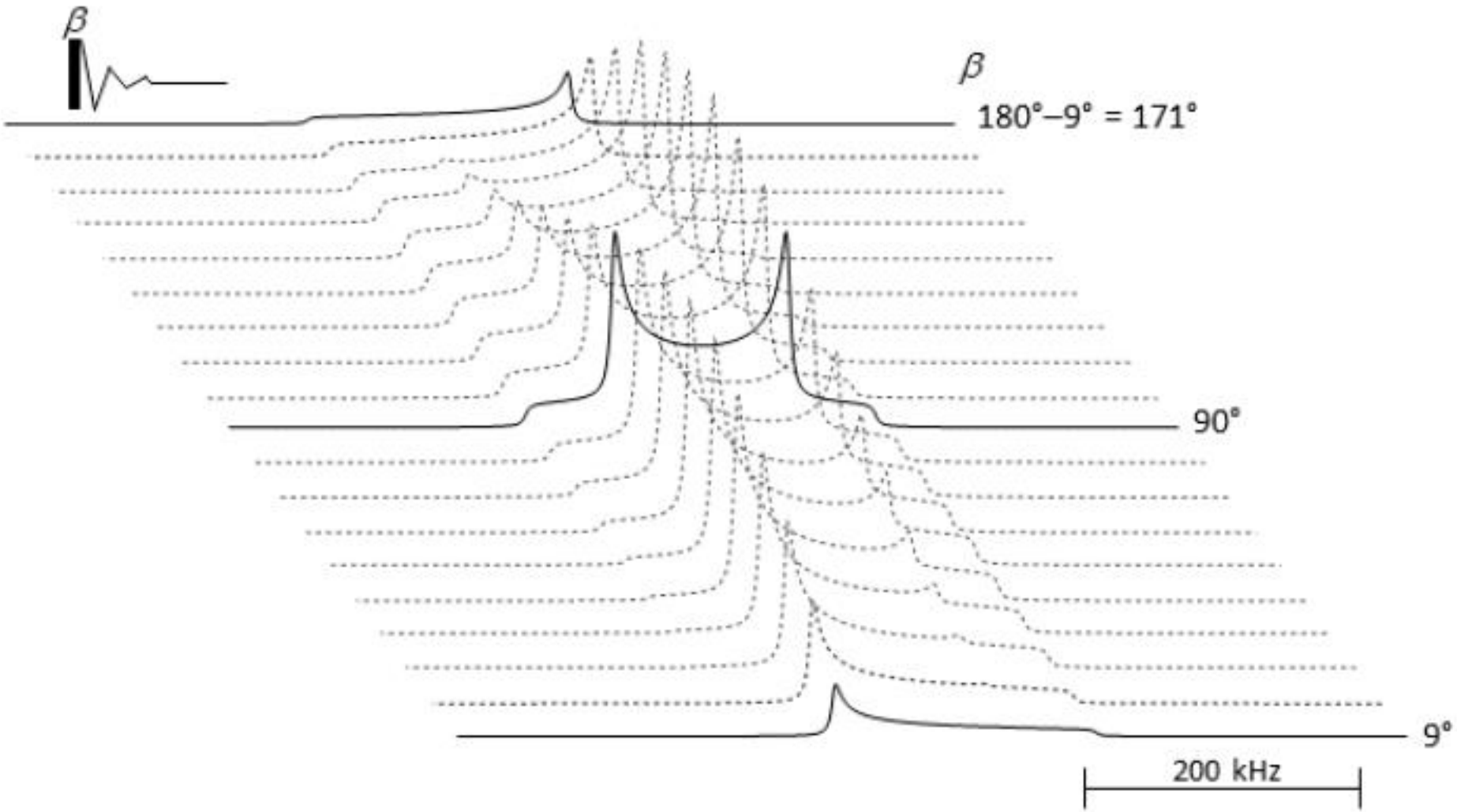

Our asymmetry: Simulations

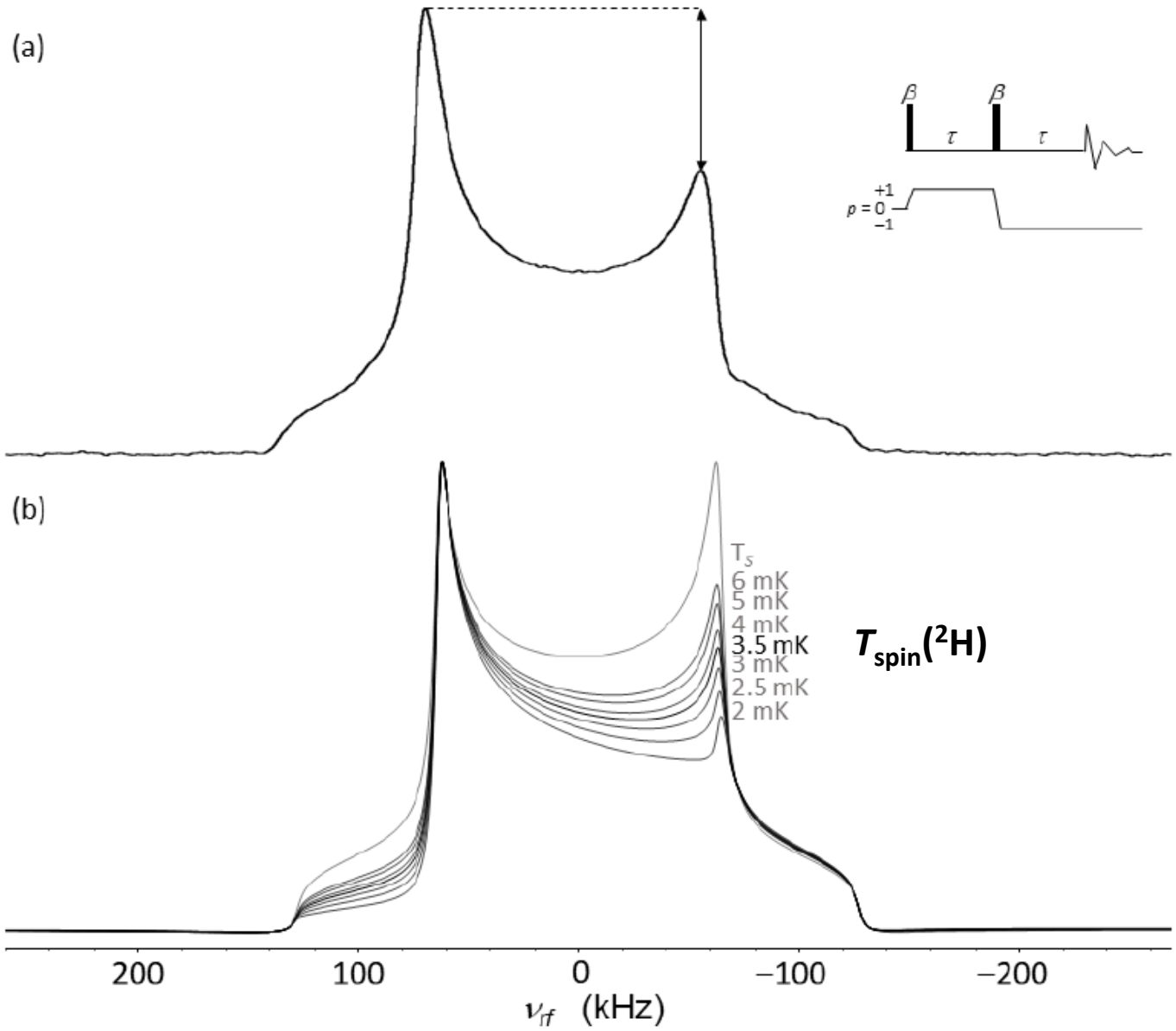

$T_{spin}(^2H)$

$T_{spin}(^2H) = 3.5$ mK

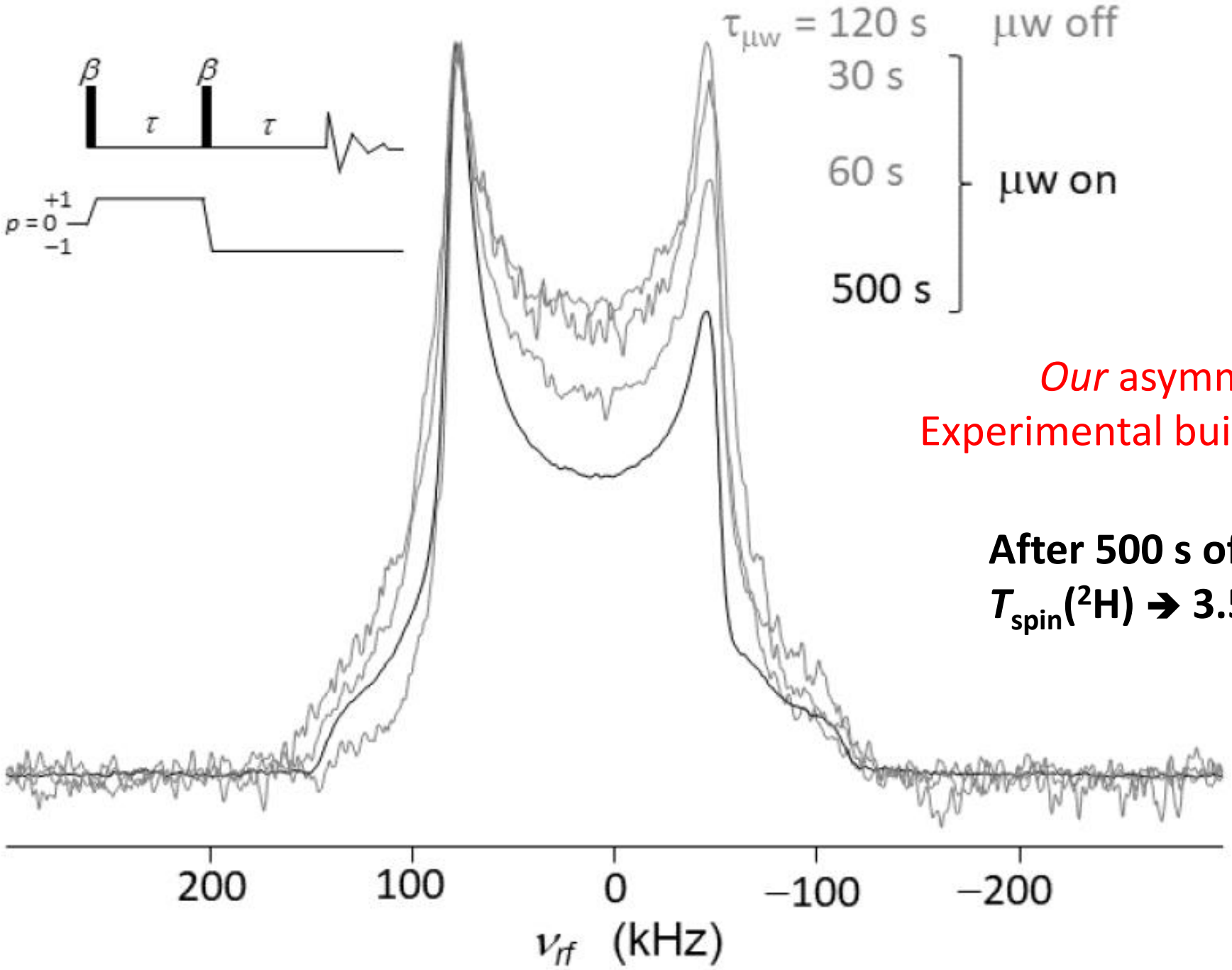

Our asymmetry:
Experimental build-up of DNP

After 500 s of DNP
$T_{spin}(^2H)$ → 3.5 mK

Ziqing Wang, Fabien Ferrage, Olivier Lequin, Mathieu Baudin, Julien Bouclon, Nicolas Birlirakis, Pavel Kaderavek, Aditya Jhajharia, Guillaume Bouvignies, Diego Carnevale, Sina Marhabaie, Xiao Ji, Emmanuelle Weber, Philippe Pelupessy, Geoffrey Bodenhausen, Dennis Kurzbach (Daniel Abergel en mission) (ENS, June 2017))

Paris en résonance (2013-2016) at Ecole Nornale Supérieure

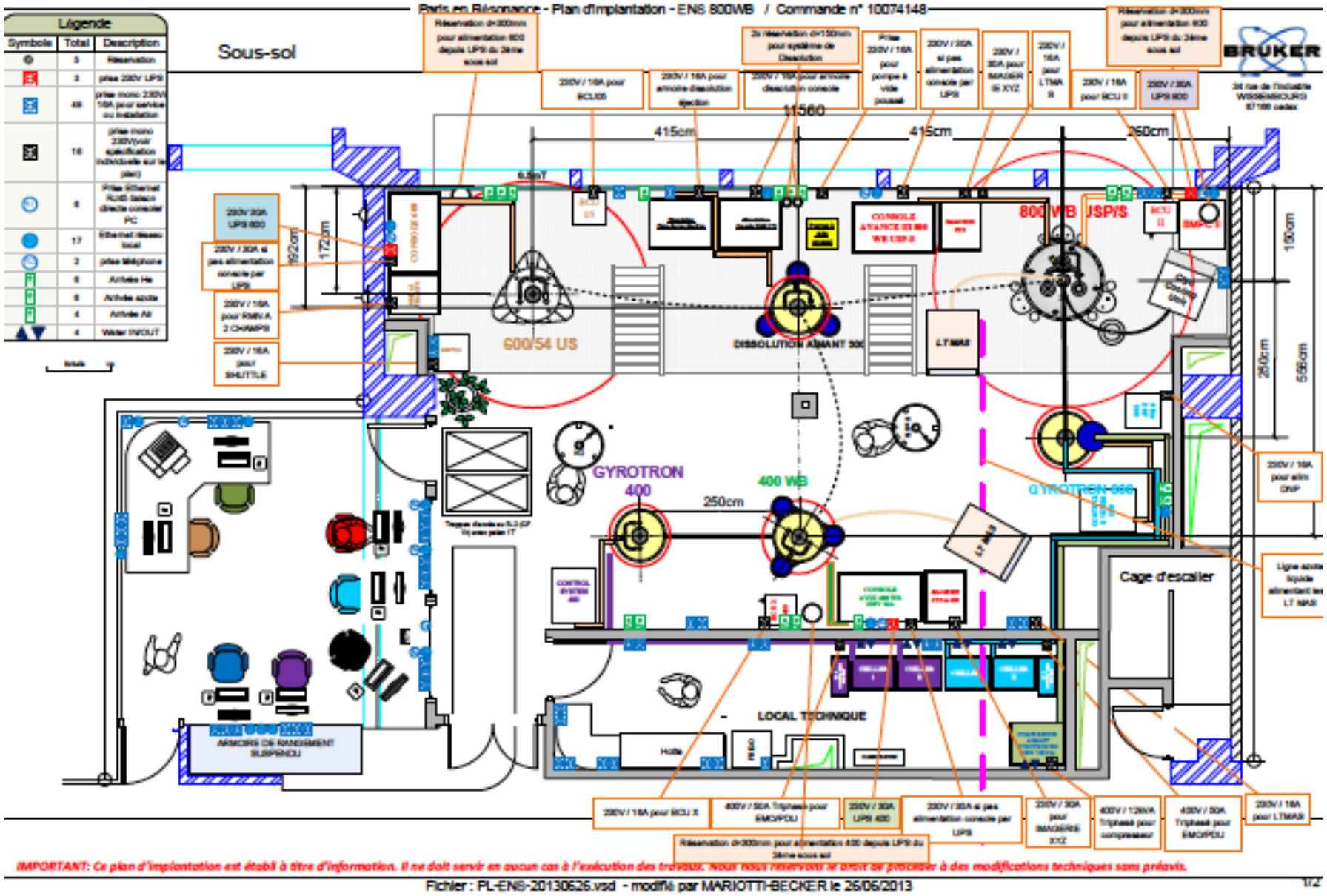

Hyperdensity:

67.7 T/ 100 m^2

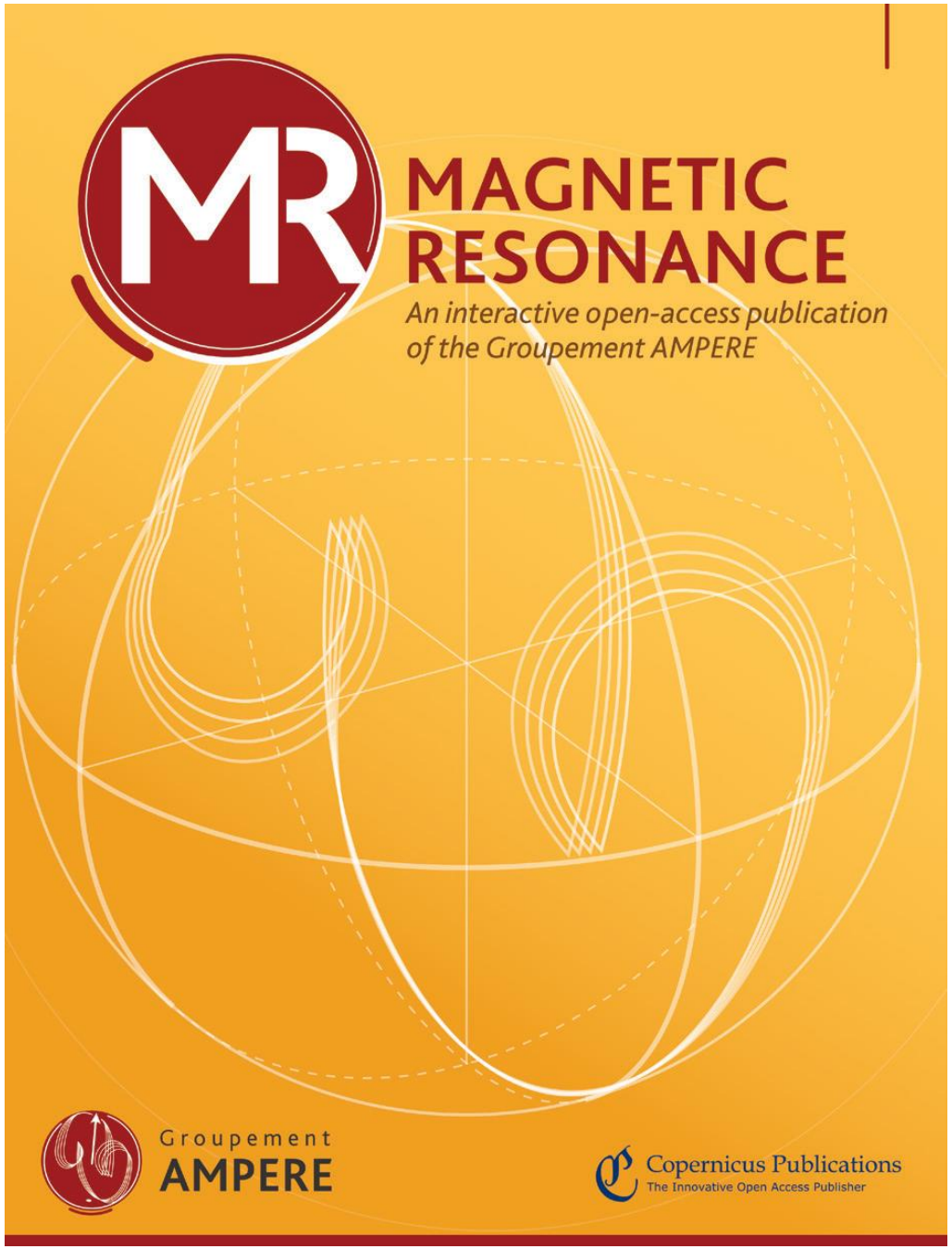

Martin Rasmussen (Copernicus)

and

Bernard Blümich (Ampère)

Open Access
Gold but cheap: 75 €/page
Interactive reviewing
Public reviews

Open Access
MAGNETIC RESONANCE

ENS
SU
CNRS
IR-RMN-THC
ANR
EQUIPEX
ERC
Bruker

ECOLE NORMALE SUPERIEURE

European Research Council

Thank you for your attention

Spin thermometry: deuterium NMR spectra give a straightforward measure of very low spin temperatures resulting from dynamic nuclear polarization

Behdad Aghelnejad, Sina Marhabaie, Mathieu Baudin, Diego Carnevale and Geoffrey Bodenhausen

Ecole normale supérieure, Paris

Dynamic nuclear polarization of samples at low temperatures, typically between 1.2 and 4.2 K, allows one to achieve spin temperatures as low as 2 mK, so that for many nuclear isotopes the high-temperature approximation is violated. This leads to characteristic asymmetries in powder spectra. We show the lineshapes due to the quadrupolar couplings of deuterium spins that are present in virtually all solvents used for such experiments allows the quick yet accurate determination of the spin temperature, or, equivalently, of the polarization. The observation of quadrupolar echoes excited by short pulses allows one to monitor the build-up and decay of positive or negative hyperpolarization when switching the frequency of the microwave irradiation.

Has this asymmetry been seen before?

PHYSICAL REVIEW A VOLUME 6, NUMBER 3 SEPTEMBER 1972

Nuclear-Spin-Lattice Relaxation of Solid Hydrogen at Low Temperatures*

N. S. Sullivan and R. V. Pound
Lyman Laboratory of Physics, Harvard University, Cambidge, Massachusetts 02138
(Received 8 May 1972)

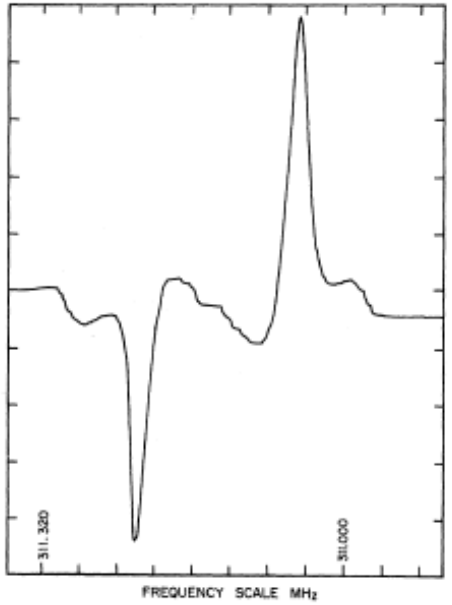

FIG. 1. Derivative absorption-line spectrum of solid hydrogen at 73 ± 5 m °K.