QPix Technology: Research and Development towards kiloTon scale pixelated LArTPC

Jonathan Asaadi
University of Texas at Arlington

Work based on original paper by Dave Nygren (UTA) and Yuan Mei (LBNL): arXiv:1809.10213

Introduction

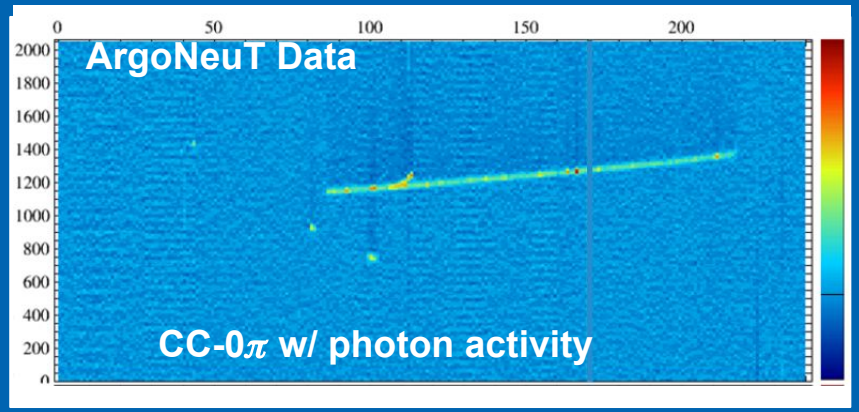

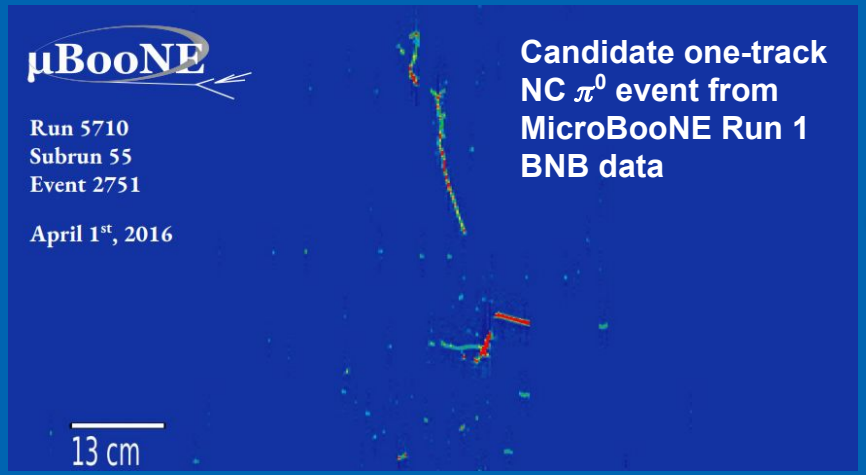

- Liquid Argon Time Projection Chambers (LArTPC's) offer access to very high quality and detailed information
- Leveraging this information allows unprecedented access to detailed neutrino interaction specifics from MeV - GeV scales
- Capturing this data w/o compromise and maintaining the intrinsic 3-D quality is an essential component of all LArTPC readouts!

Introduction

- **Conventional LArTPC's use sets of wire planes at different orientations to reconstruct the 3D image**
  - Challenge in reconstruction of complex topologies

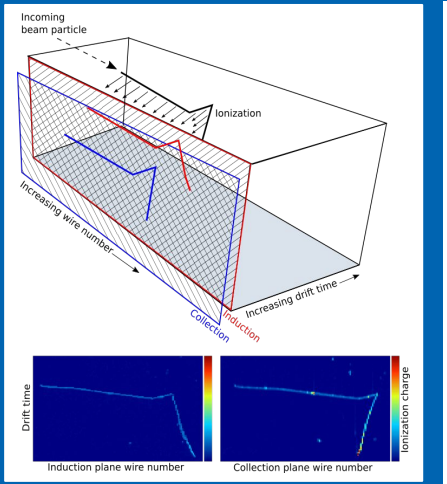

- **kiloTon scale LArTPC's use "wrapped wire" geometries to reduce the number of readout channels**
  - Challenging to engineer such massive structures

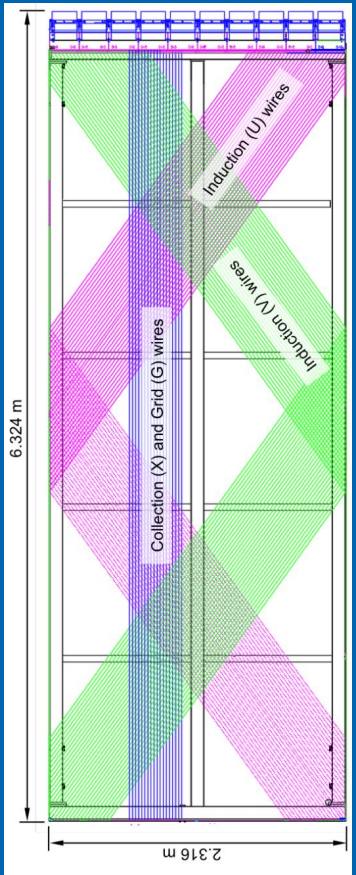

- **Being able to readout using pixels instead of wires could off a solution**
  - Comes at a "cost" of many more channels! → **Requires an "unorthodox" solution**

Introduction

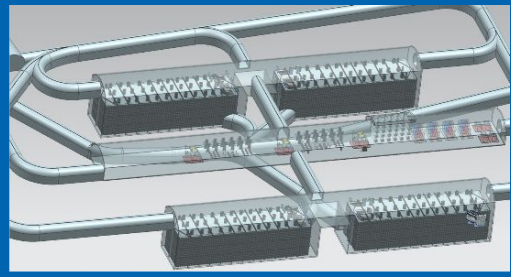

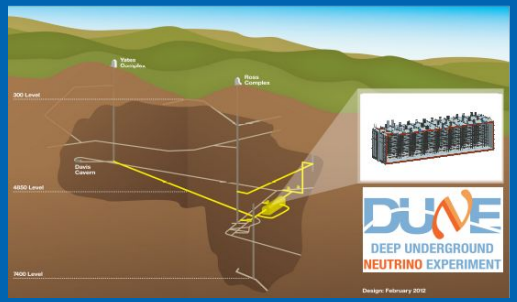

- Kiloton scale LArTPC's (such as DUNE) afford a huge "big data" challenge to extract all the details offered by LArTPC
  - 1 second of DUNE full stream data ~4.6 TB (for 1.5 million channels)
    - 1 year of full stream data ~ 145 EB (exabytes)
- However, most of the time there is "nothing of interest" going on in the detector
  - But you must be ready "instantly" when something happens (proton decay, supernova, beam event, etc)
- To readout such massive detectors with pixels requires an enormous number of channels
  - $\mathcal{O}$ (130 million) per 10 kTon at 4mm pitch
  - Requires an "unorthodox" solution

An "unorthodox" solution

- **The Q-Pix pixel readout follows the "electronic principle of least action"**
  - **Don't do anything unless there is something to do**
    - Offers a solution to the immense data rates
      - Quiescent data rate $\mathcal{O}$(50 Mb/s)
    - Allows for the pixelization of massive detectors
- **Q-Pix offers an innovation in signal capture with a new approach and measures time-to-charge:(ΔQ)**
  - **Keeps the detailed waveforms of the LArTPC**
  - **Attempts to exploit ^{39}Ar to provide an automatic charge calibration**
- **"Novelty does not automatically confer benefit"**
  - **Much remains to be explored**

Q-Pix: The Charge Integrate-Reset (CIR) Block

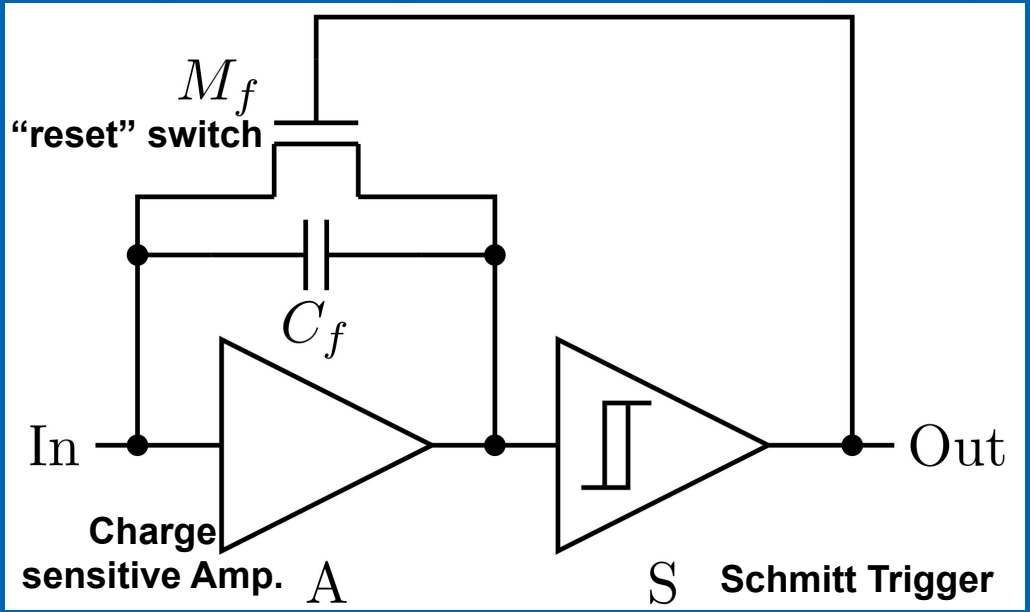

- Charge from a pixel (In) integrates on a charge sensitive amplifier (A) until a threshold ($V_{th} \sim \Delta Q/C_f$) is met which fires the Schmitt Trigger which causes a reset (M_f) and the loop repeats

Q-Pix: The Charge Integrate-Reset (CIR) Block

- **Measure the time of the "reset" using a local clock (within the ASIC)**
- **Basic datum is 64 bits**
  - 32 bit time + pixel address + ASIC ID + Configuration + ...

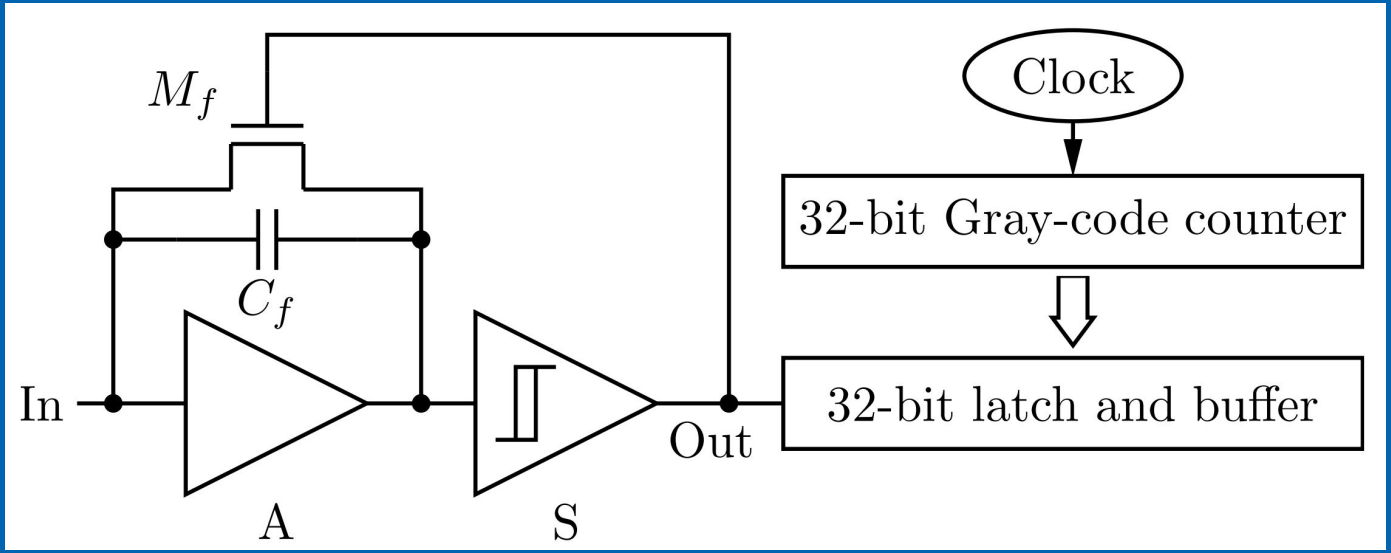

What is new here?

- Take the difference between sequential resets
  - Reset Time Difference = RTD
- Total charge for any RTD = ΔQ
- RTD's measure the instantaneous current and captures the waveform
  - Small average current (background) = Large RTD
    - Background from ^{39}Ar ~ 100 aA
  - Large average current (signal) = Small RTD
    - Typical minimum ionizing track ~ 1.5 nA
- Signal / Background ~ 10^7
  - Background and Signal should be easy to distinguish
  - No signal differentiation (unlike induction wires)

Reset Time Difference

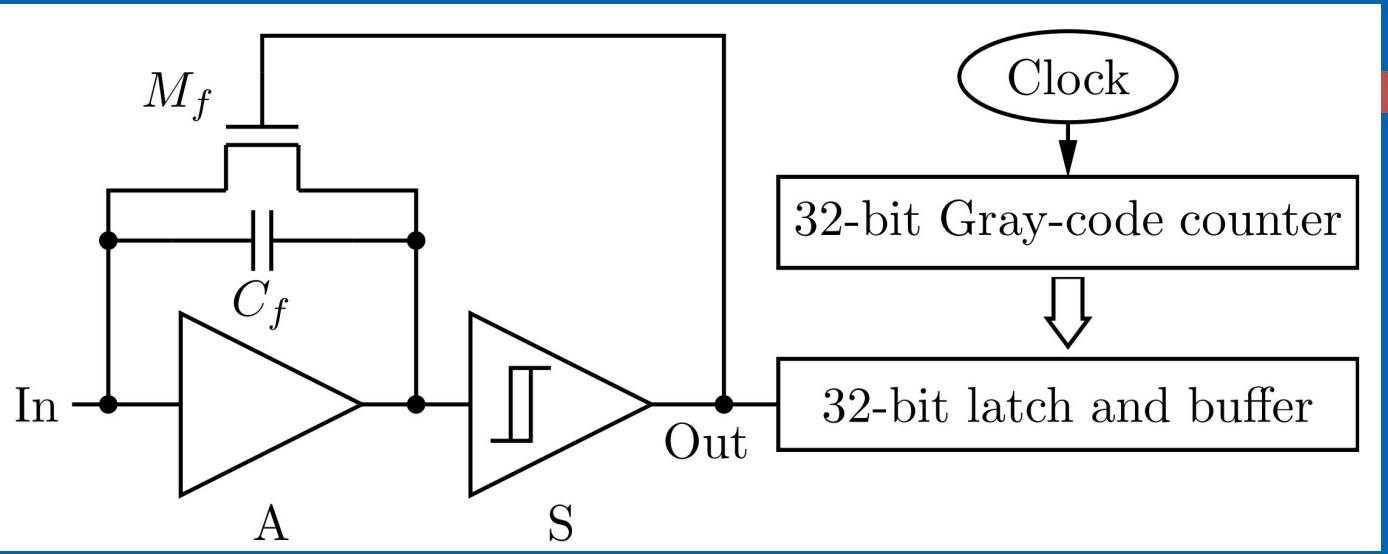

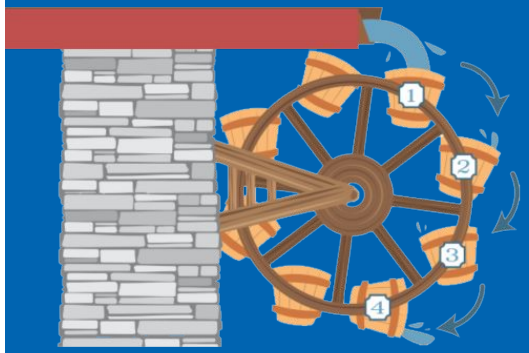

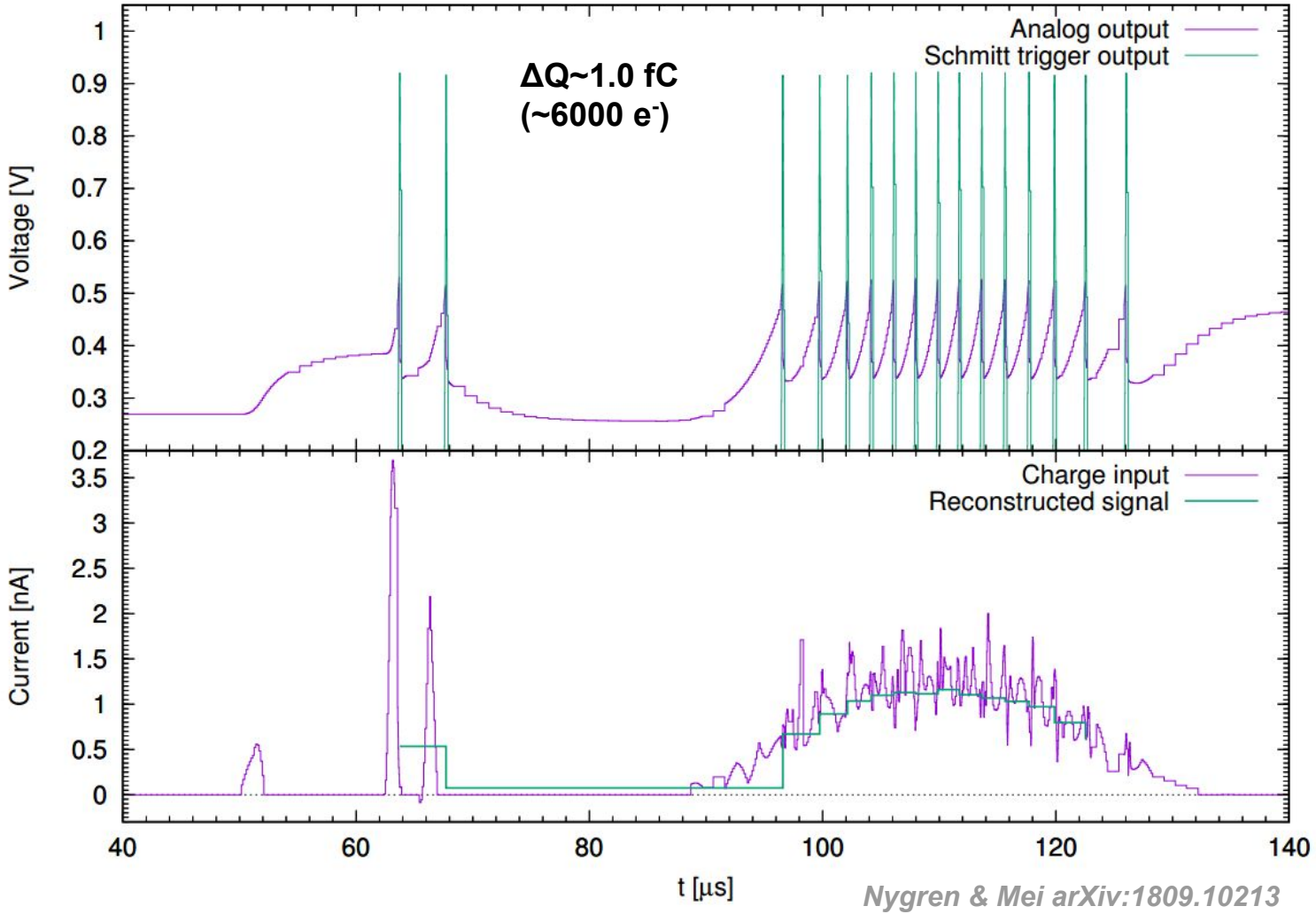

Nygren & Mei arXiv:1809.10213

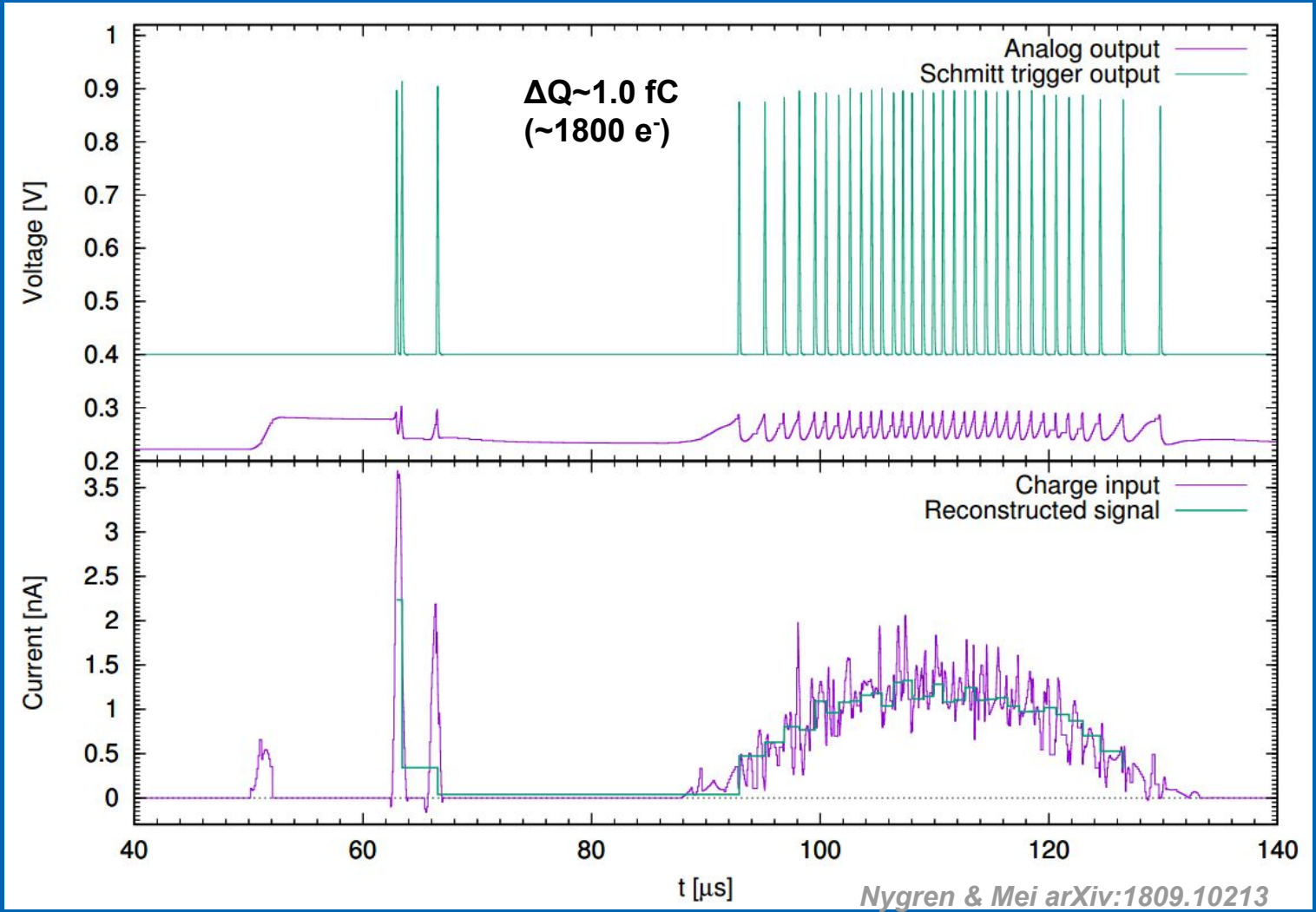
ΔQ~1.0 fC
(~1800 e⁻)
Analog output
Schmitt trigger output
Voltage [V]
Charge input
Reconstructed signal
Current [nA]
t [μs]
Nygren & Mei arXiv:1809.10213

How the time stamping works

- **One free running clock per ASIC (50-100 MHz)**
  - **Required precision for DUNE $\delta f/f \sim 10^{-6}$ per second**
    - Expect this to be easily achieved in liquid argon
- **Time stamping routine has the ASIC asked once per second "what time is it?"**
  - **ASIC captures local time and sends it**
  - **Simple linear transformation to master clock synced to GMT**
  - **RTD's calculated "off chip"**
- **Has this idea been realized before?**
  - **YES! In ICECUBE (by Nygren)**
    - Oscillator precision achieved > 10^{-10} /s (hard to measure)

Q-Pix ASIC Concept

- **16-32 pixels / ASIC**
  - 1 Free-running clock/ASIC
  - 1 capture register for clock value, ASIC, pixel subset
  - Necessary buffer depth for beam/burst events
  - State machine to manage dynamic network, token passing, clock domain crossing, data transfer to network (many details to be worked out)
- **Basic unit would be a “tile” of 16x16 ASICs (4092 4mm x 4mm pixels)**
  - Tile size 25.6 cm x 25.6 cm

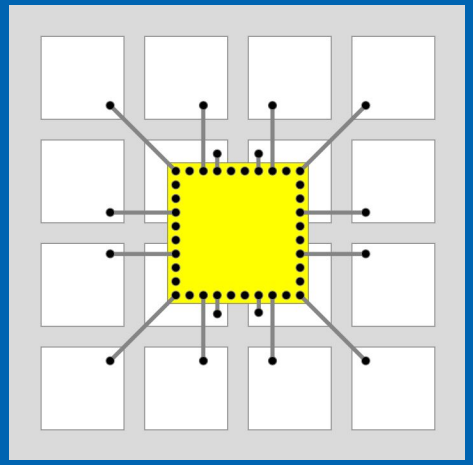

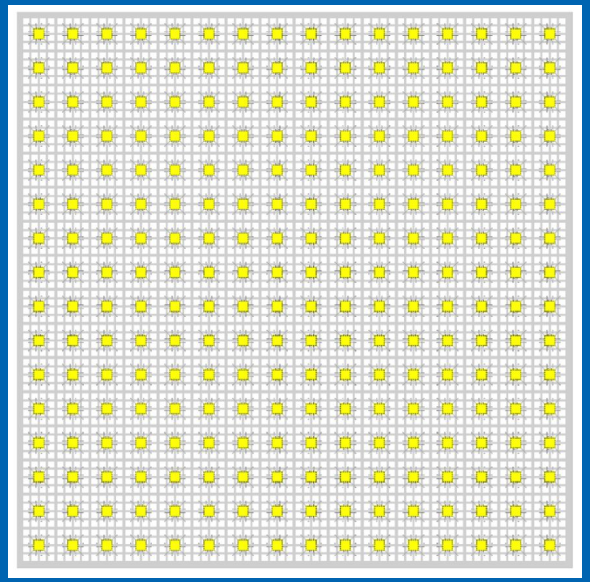

Q-Pix Consortium

- **A consortium of universities and labs has formed to realize and test the Q-Pix concept**
  - Being done in close collaboration with LArPix (JINST 13 P10007) readout for the DUNE near detector
- **Four central ideas being worked on**
  - **Physics Simulations: Quantify the conferred benefit of pixel vs. wire readout and the requirements of the ASIC design**
  - **CIR Input: all extraneous leakage current at the input node needs to be small (aA)**
  - **Clock: $\delta f/f \sim 10^{-6}$ per second**
  - **Light Detection: Exploring new ideas using photoconductors on the surface of the pixels**

Physics Simulation

- To help quantify the range of currents the Q-Pix ASIC will need to reconstruct we are using of neutrino interactions in argon

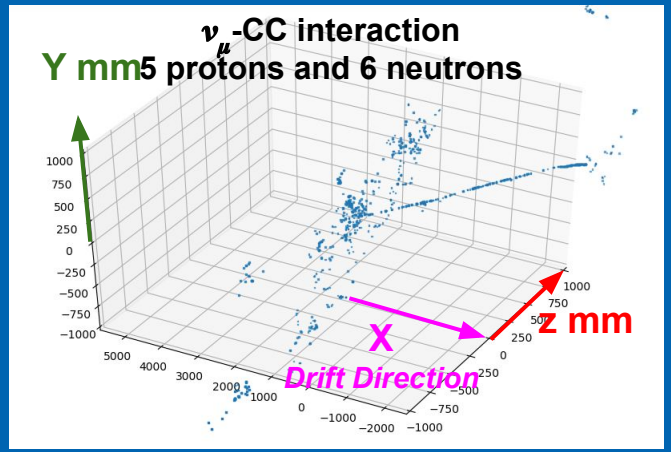

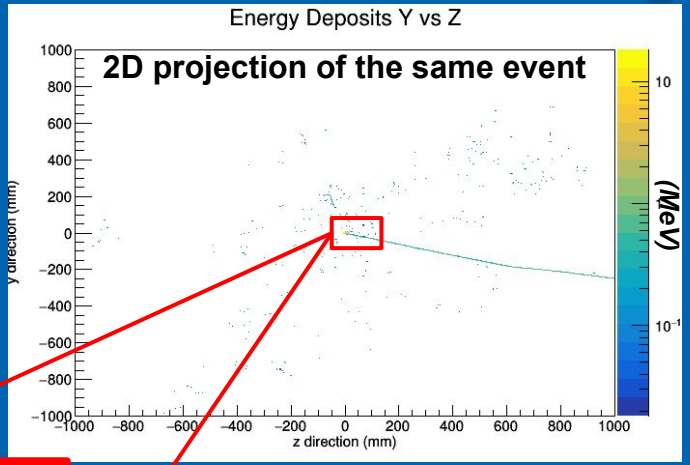

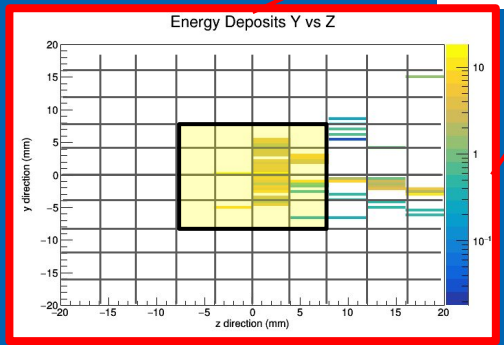

Focus on a 16mm x 16mm (4pixels x 4pixels) area around the vertex to get a sense of the currents that would be seen

Physics Simulation

- We can take the charge seen by a pixel and translate this into current as a function of time

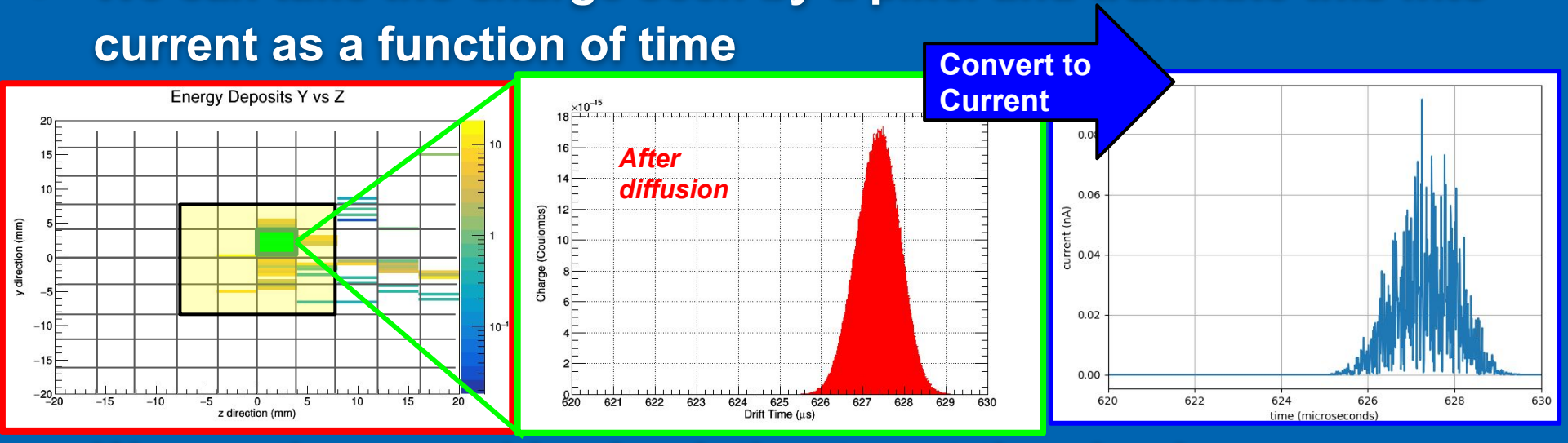

- We can then use this simulation to set the physics requirements on the Q-Pix ASIC
  - Allowed reset time, minimum ΔQ, etc…
  - Ongoing studies exploring non-beam (supernova, proton decay, etc…) and beam related parameters

Light Detection

- **One very "blue sky" idea currently being considered is to see if the same pixels which collect ionization charge can be used to detect UV photons**
  - Currently exploring different thin-film photo-conductors which may offer an opportunity
  - Exploring amorphous Selenium's properties
    - Commonly used in X-Ray digital radiography devices

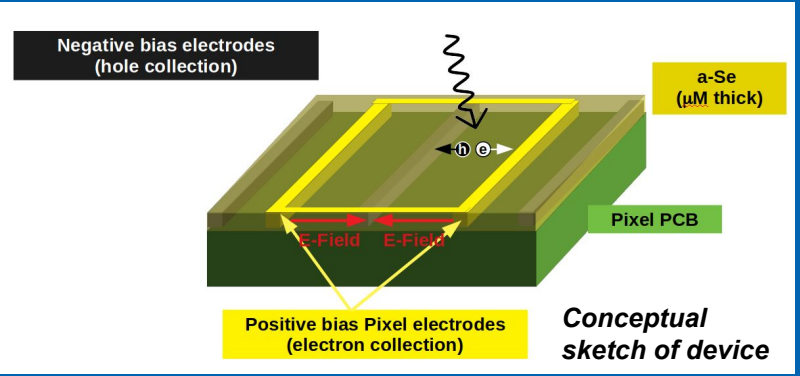

Conceptual sketch of device

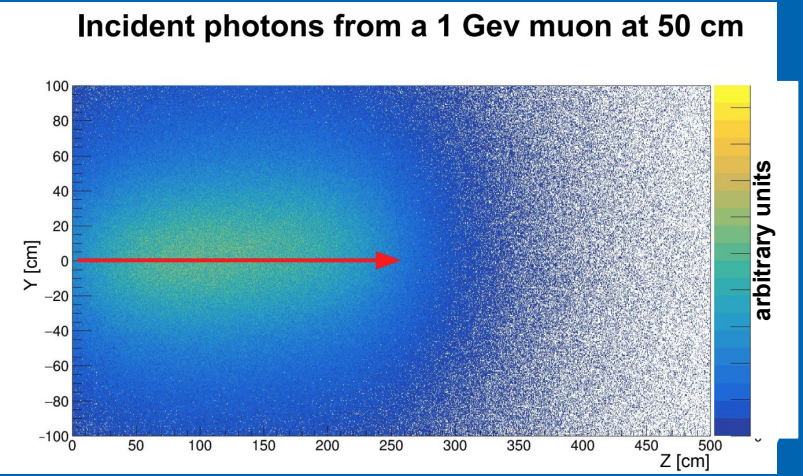

2 - 10 photons per pixel

- **If realized, offers a transformative opportunity in LArTPC's**

Conclusions

- **Readout requirements for kiloton scale LArTPC's offer many challenges to fully exploit the rich data they have to offer**
  - **We must optimize for discovery!!!**
- **Low threshold pixel based readout can optimize for discovery the impact of these detectors**
  - **Requires an unorthodox solution**
- **The Q-Pix concept may afford a way to pixelize a kiloton scale LArTPC and retain all the details of data**
  - The devil lives in the details, but an effort is underway with promising preliminary results
  - Stay tuned for more updates!

Q-Pix consortium would like the thank the DOE for its support via DE-SC0020065 award