Overview of WP1 – Applications

Pedro Martinez – BSC, Jacopo De Amicis - JSC

12:15 – 12:45

WP1 Outline

- Partners, Tasks and Deliverables
- WP1 status – D1.3 summary
- Work done
- Next steps
- Technologies
- Applications‘ status:
  - NMBU: Neuroscience
  - NCSA: Molecular Dynamics
  - ASTRON: Radio Astronomy
  - KU Leuven: Space Weather
  - UoI: Data Analytics in Earth Science
  - CERN: High Energy Physics

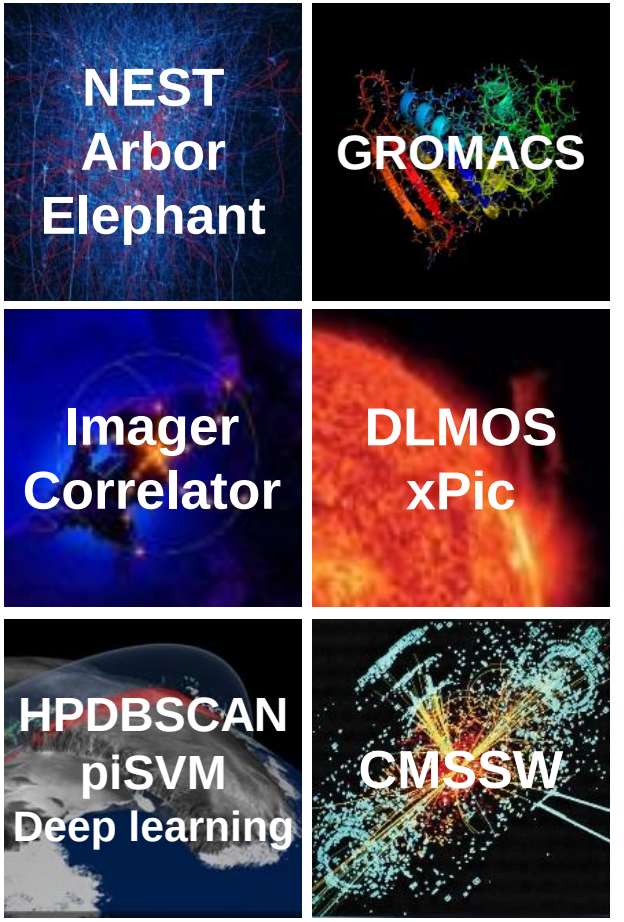

Partners, Tasks and Deliverables

JUELICH	Intel	BSC	KULeuven	ASTRON	NCSA	NMBU	UoI	CERN
45 PM	12 PM	18 PM	36 PM	36 PM	36 PM	36 PM	36 PM	36 PM

Task	Description	Partner	Status	
1.1	Support team	Juelich/BSC	M1-M45	Ongoing
1.2	Neuroscience	NMBU	M1-M45	Ongoing
1.3	Molecular Dynamics	NCSA	M1-M45	Ongoing
1.4	Radio Astronomy	ASTRON	M1-M45	Ongoing
1.5	Space Weather	KULeuven	M1-M45	Ongoing
1.6	Data Analytics in Earth Science	UoI	M1-M45	Ongoing
1.7	High Energy Physics	CERN	M1-M45	Ongoing

Deliverable	Description	Status	
D1.1	Application co-design input	M4	✓
D1.2	Application use cases and traces	M9	✓
D1.3	**Application distribution strategy**	**M21**	✓
D1.4	Initial application ports	M30	Ongoing
D1.5	Final report on applications experience	M45	Not Started

WP1 status – D1.3 summary

- Task 1.2: Neuroscience (NMBU)
  - Not affected by the ESB redesign: Arbor targets GPUs

WP1 status – D1.3 summary

- Task 1.2: Neuroscience (NMBU)
  - Not affected by the ESB redesign: Arbor targets GPUs
  - Application mapping:
    - *NEST (CM) + Arbor/HybridLFPy (ESB)*
    - *NEST (CM) + Elephant (DAM)*
    - *Module communications via the MUSIC library*

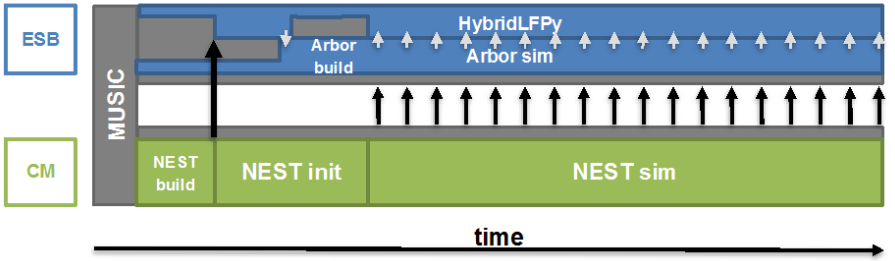

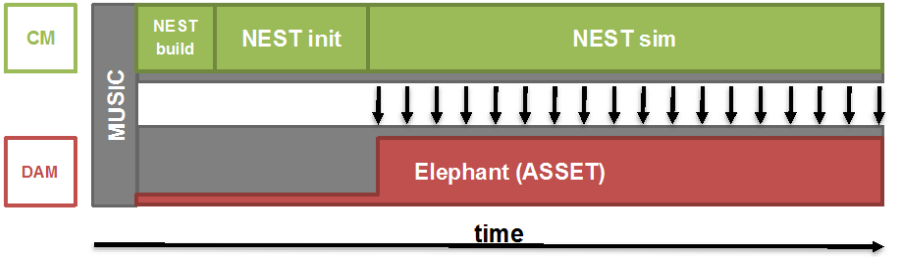

WP1 status – D1.3 summary

- Task 1.3: Molecular dynamics (NCSA)
  - To use OpenCL/CUDA kernels already present in GROMACS

WP1 status – D1.3 summary

- Task 1.3: Molecular dynamics (NCSA)
  - To use OpenCL/CUDA kernels already present in GROMACS
  - Three different mappings depending on the number of particles:
    - *CM only (<10^4 particles)*
    - *ESB only or DAM only (~10^5 particles)*
    - *Modular CM-ESB (>10^6 particles)*

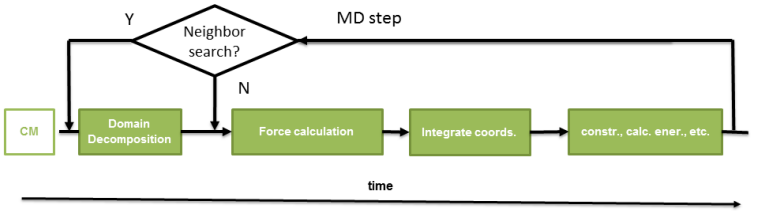

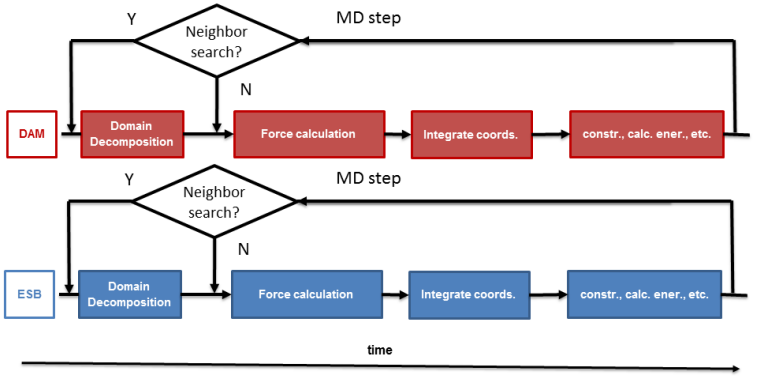

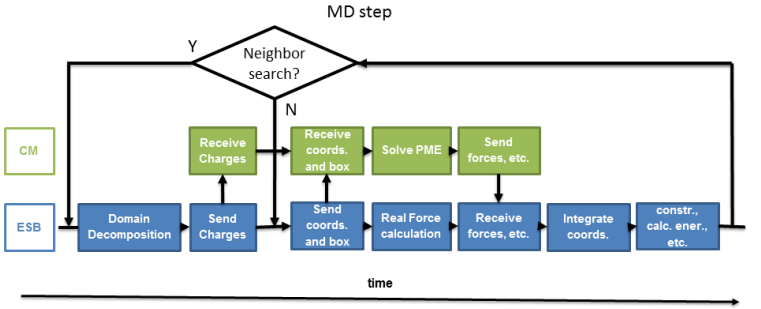

WP1 status – D1.3 summary

- Task 1.4: Radio astronomy (ASTRON)
  - Nothing changes in the code due to the ESB redesign

WP1 status – D1.3 summary

- Task 1.4: Radio astronomy (ASTRON)
  - Nothing changes in the code due to the ESB redesign
  - Either DAM or ESB can be used to correlate images

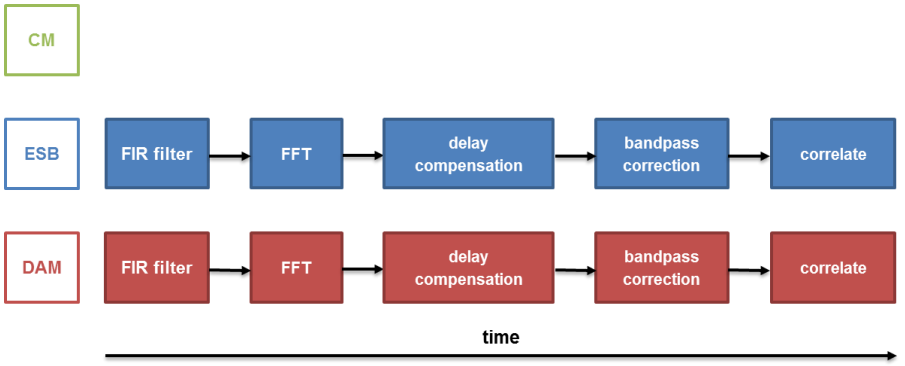

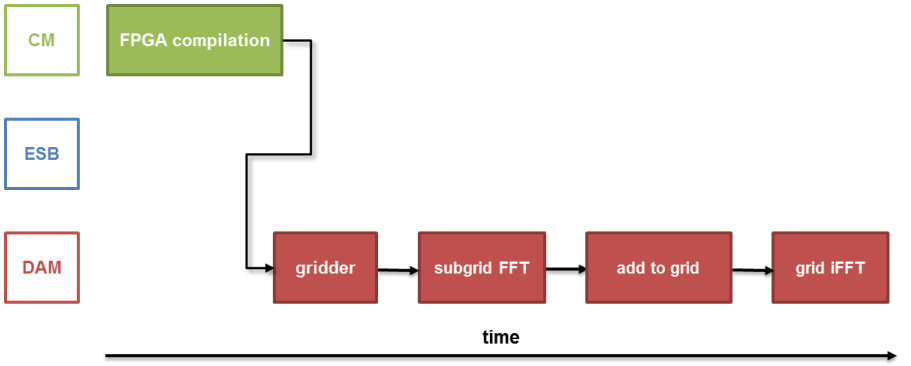

WP1 status – D1.3 summary

- Task 1.5: Space Weather (KU Leuven)
  - DLMOS training originally mapped to the DAM could also be executed on the ESB GPUs

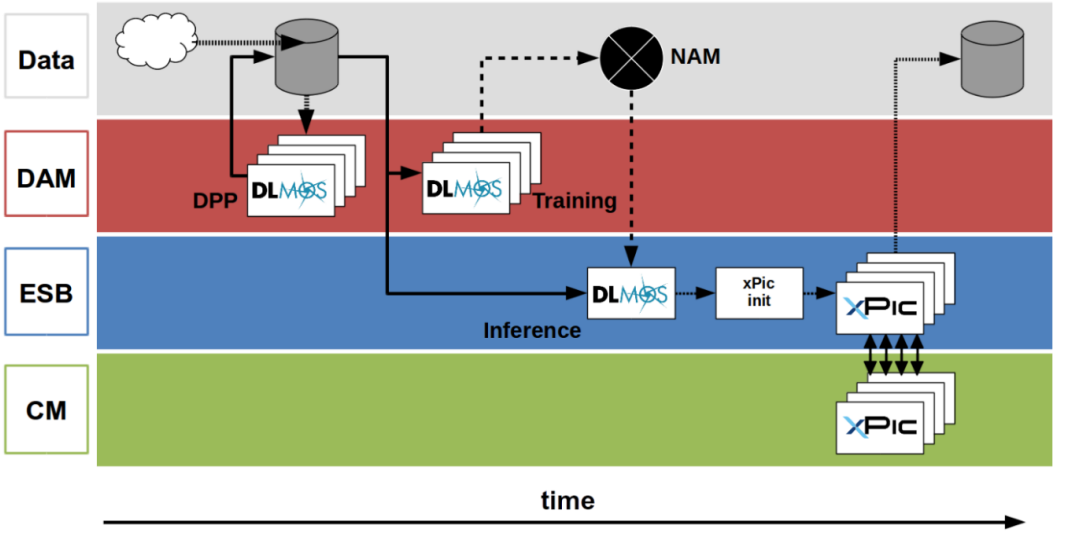

WP1 status – D1.3 summary

- Task 1.5: Space Weather (KU Leuven)
  - DLMOS training originally mapped to the DAM could also be executed on the ESB GPUs
  - xPic particle solver to run on the ESB GPUs using either:
    - *OpenMP 4.5 & 5.0 GPU offloading support in order to reuse original code as much as possible*
    - *CUDA kernels written from scratch*

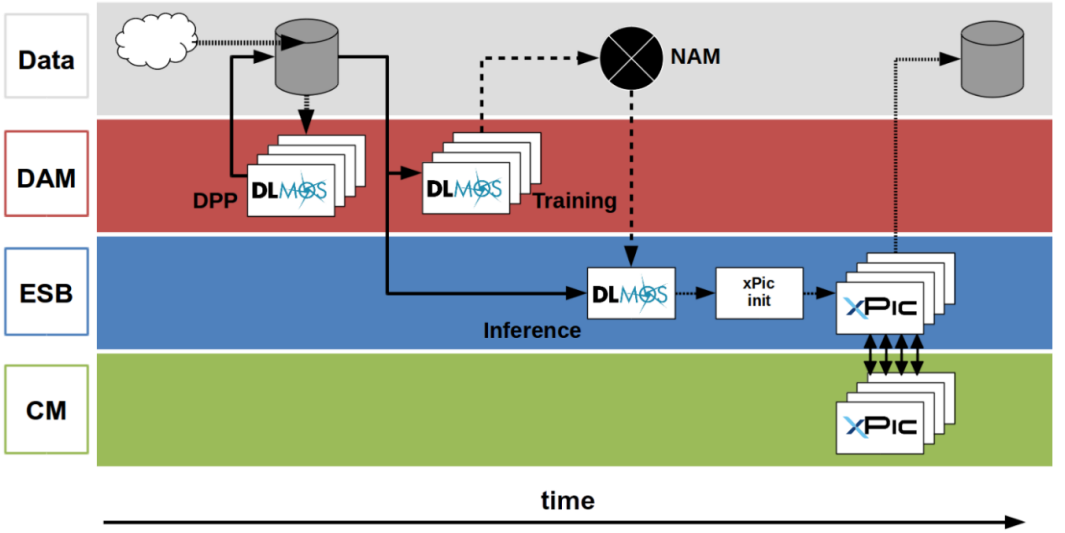

WP1 status – D1.3 summary

- Task 1.6: Data analytics in Earth science (UoI)
  - ESB redesign had a major impact:
    - *To rewrite HPDBSCAN for accelerators (GPUs or FPGAs)*
    - *To rewrite PiSVM for accelerators*
    - *Similar to KU Leuven: utilise either OpenMP 4.5 & 5.0 or pure CUDA kernels*

WP1 status – D1.3 summary

- Task 1.6: Data analytics in Earth science (UoI)
  - ESB redesign had a major impact:
    - *To rewrite HPDBSCAN for accelerators (GPUs or FPGAs)*
    - *To rewrite PiSVM for accelerators*
    - *Similar to KU Leuven: utilise either OpenMP 4.5 & 5.0 or pure CUDA kernels*
  - Application mapping is commited to explore both the NAM (ESB) and NVRAM (DAM) for data storage

WP1 status – D1.3 summary

- Task 1.7: High Energy Physics (CERN)
  - Not affected by the ESB redesign

WP1 status – D1.3 summary

- Task 1.7: High Energy Physics (CERN)
  - Not affected by the ESB redesign
  - Application mapping:
    - *CMSSW reconstruction phase on either ESB or DAM using GPUs*
    - *CMS classification phase can use the three modules*

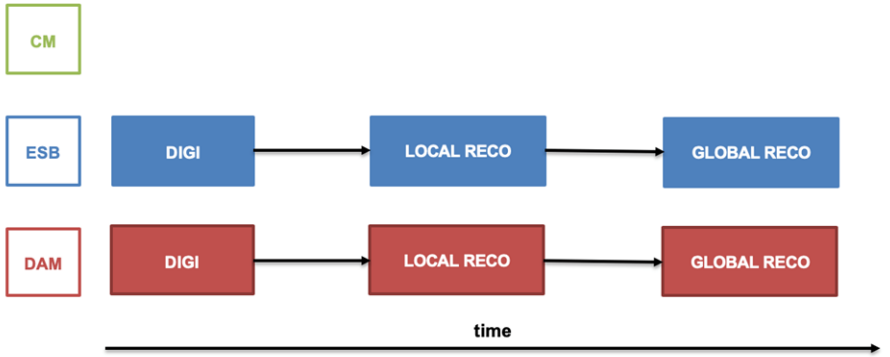

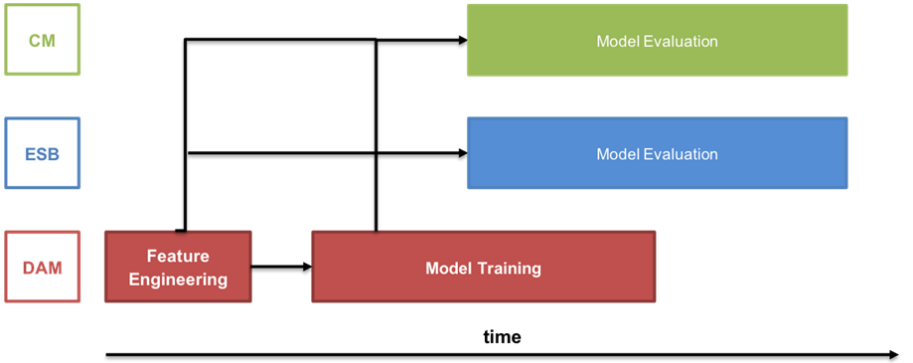

Work done

- Bi-weekly teleconferences, DDG, ToW, F2F meetings
- Revised and resubmitted deliverable D1.3
- Collaboration with other WPs:
  - ESB review and deliverable D8.4
  - Coordinate WP1 (task 1.4) and WP2 (task 2.3) on the performance analysis and extrapolation study of GROMACS
  - Begun a collaboration with WP1 (task 1.6) and WP6 (task 6.2) to incorporate the OmpSs-2 programming model
- Technical aspects:
  - Manage access to DEEP, BSCW and TRAC repositories
  - Investigation of modular applications on currently available modular systems (JURECA)
  - Supported CERN on Intel OpenCL for FPGAs
  - Updated applications' software requirements
  - Deployment of new software stack for the Cluster Module and prototype nodes (Machine Learning and prototype DAM)

Next steps

- Work package role change planned in June:
  - WP1 leader: Anke Kreuzer
  - WP1 deputy: Jacopo De Amicis
- Continue supporting application developers and users of the DEEP system
- Provide an FPGA workshop at JSC (23rd May)
- Update BSC software stack and extend collaboration between WP1 (task 1.5) and WP6 (task 6.2) to integrate the OmpSs-2 programming model
- Work toward D1.4 “Initial Application Ports” (M30 – Dec 2019)

Technologies

Technology	NMBU Neuroscience	NCSA Molecular Dynamics	ASTRON Radio Astronomy	KU Leuven Space Weather	UoI Data Analytics Earth Science	CERN High Energy Physics
CM	✓	✓	✓	✓	✓	✓
ESB	✓	⌛	✓	⌛	⌛	⌛
DAM	✓	⌛	✓	✓	⌛	⌛
NVM	-	-	📅	📅	⌛	⌛
NAM	-	📅	📅	⌛	⌛	⌛
SIONlib	⌛	-	📅	✓ (DEEP-ER)	-	-
OmpSs	-	-	✓ (DEEP-ER)	📅	⌛	-
Checkpointing	-	📅	✓ (DEEP-ER)	✓ (DEEP-ER)	📅	-
Deep learning	-	-	-	✓	✓	✓
JUBE	⌛	⌛	⌛	⌛	⌛	⌛

Legend: ✓ Used ⌛ Work in progress 📅 Not started - Not applicable