Quark Matter 2019, Wuhan, China, November 4-8, 2019

# Charge-dependent flow induced by electromagnetic fields in heavy ion collisions

Dmitri Kharzeev

Based on work with
U. Gursoy, E. Marcus, K. Rajagopal, and C. Shen

BEST COLLABORATION

U.S. DEPARTMENT OF ENERGY
Office of Science

Stony Brook University

RIKEN BNL Research Center

BROOKHAVEN NATIONAL LABORATORY

# Outline

1. Motivation: need to understand the dynamics of electromagnetic (EM) fields in heavy ion collisions to probe topological transitions in QCD

2. EM fields in heavy ion collisions:
   a perturbative approach

3. Charge-dependent flow from EM fields

4. Comparison to (some) other approaches

5. Outlook

# Topological number fluctuations in non-Abelian expanding plasmas:

## baryogenesis in the Early Universe

## chiro-genesis in heavy ion collisions

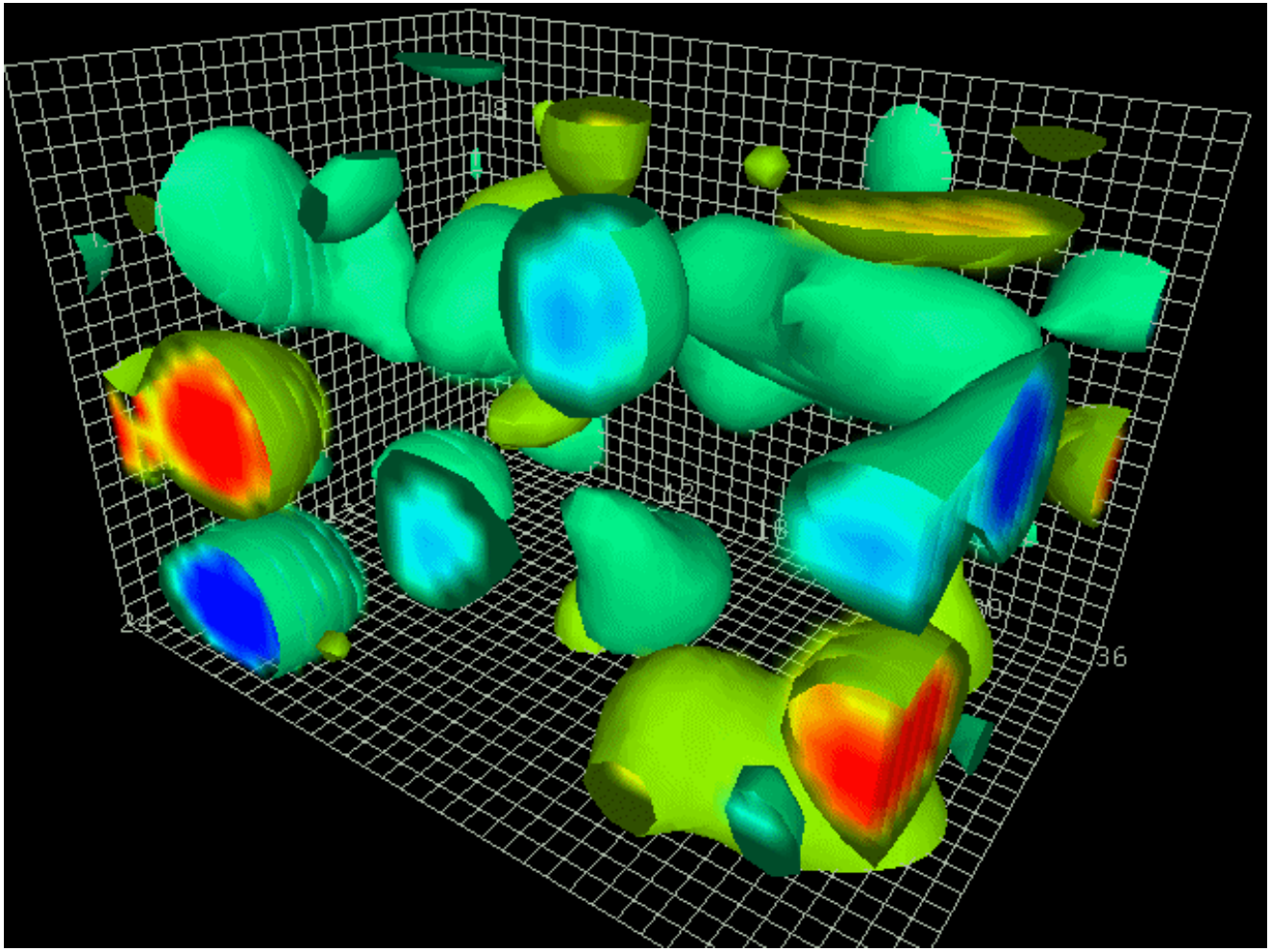

Image: D. Leinweber

# Charge separation in a magnetic field as a signature of topological transitions in QCD matter

Electric dipole moment due to chiral imbalance

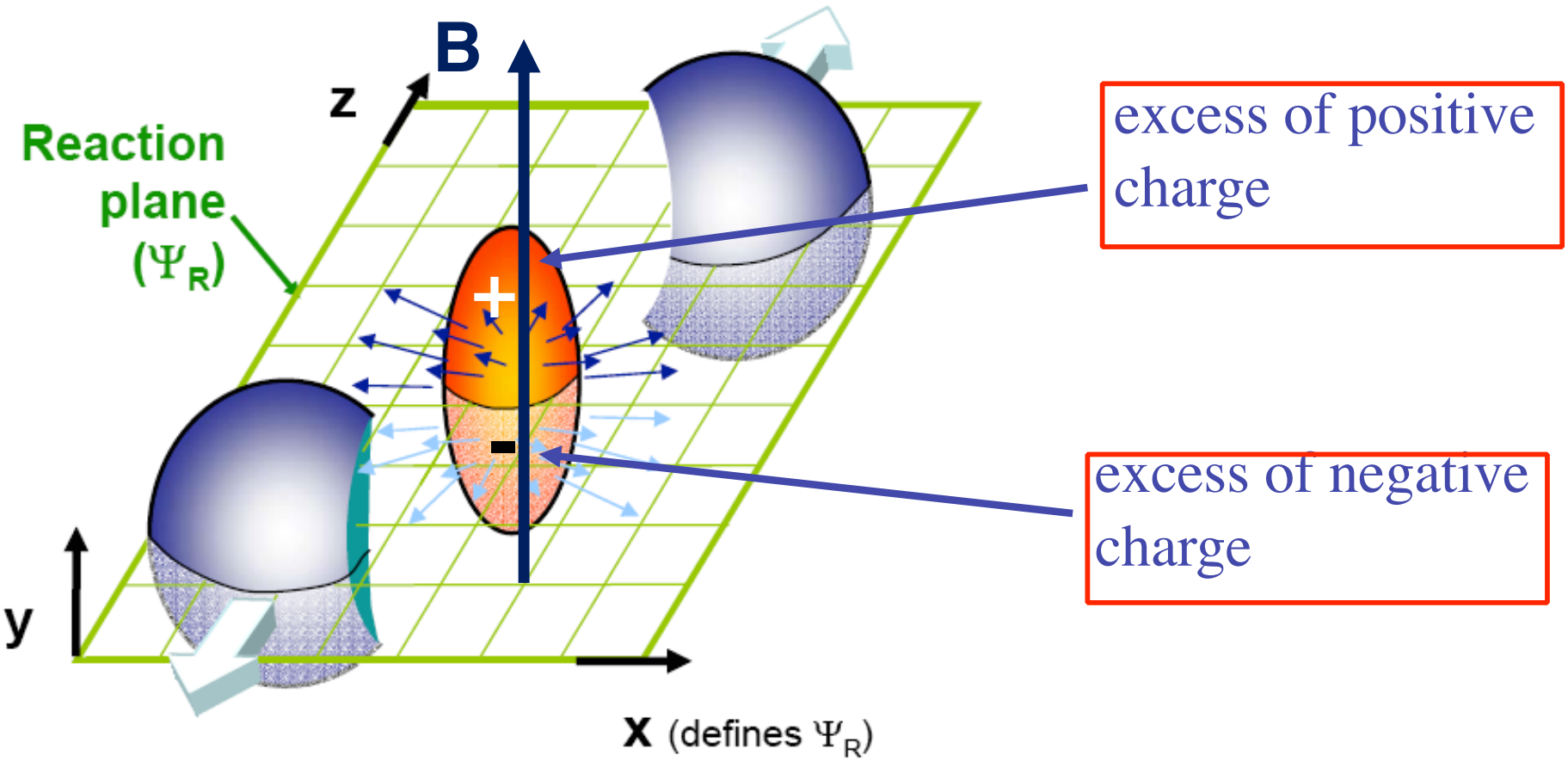


DK, hep-ph/0406125; Phys.Lett.B633(2006)260

# Chiral Magnetic Effect

DK, L.McLerran, H.Warringa NPA'07
K.Fukushima, DK, H.Warringa,
"Chiral magnetic effect" PRD'08

Chiral chemical potential is generated (locally) due to topological transitions:

$$\mu_5 = A_5^0$$

In this background, and in the presence of B, vector e.m. current is generated:

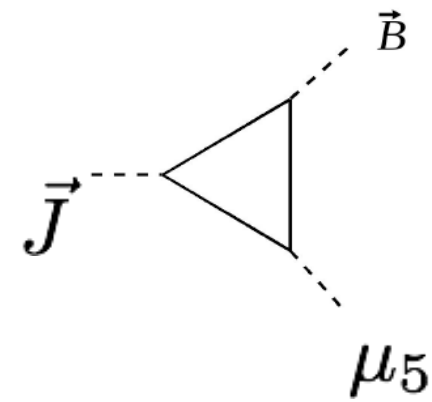


$$\partial_\mu J^\mu = \frac{e^2}{16\pi^2}\left(F_L^{\mu\nu}\tilde{F}_{L,\mu\nu} - F_R^{\mu\nu}\tilde{F}_{R,\mu\nu}\right)$$

Compute the current through

$$J^\mu = \frac{\partial \log Z[A_\mu, A_\mu^5]}{\partial A_\mu(x)}$$

**Absent in Maxwell theory!**

$$\boxed{\vec{J} = \frac{e^2}{2\pi^2}\,\mu_5\,\vec{B}}$$

Coefficient is fixed by the chiral anomaly, no corrections



**NEED TO KNOW THE MAGNETIC FIELD FOR QUANTITATIVE STUDIES**

# Heavy ion collisions as a source of the strongest magnetic fields available in the Laboratory

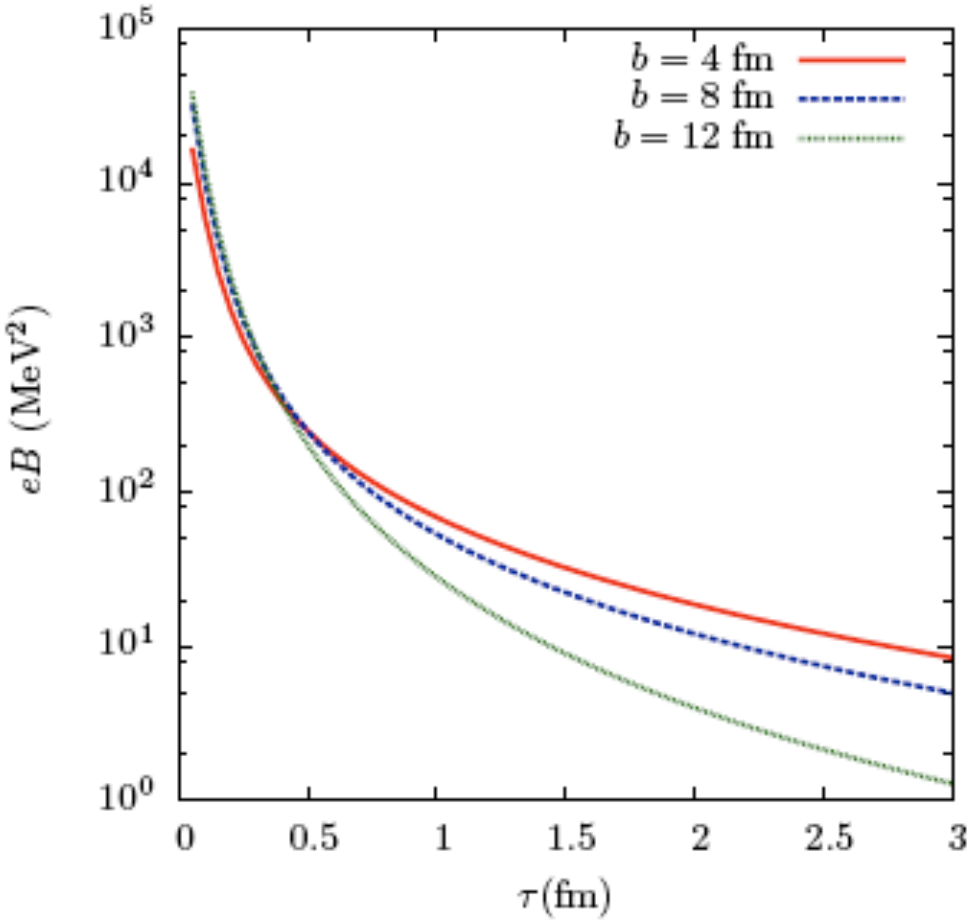


DK, L.McLerran, H.Warringa, NPA803(2008)227

Other approaches to B in high-energy collisions:

V.Skokov, A.Illarionov, V.Toneev '09
K. Tuchin '10 –'19
V.Voronyuk et al, '11
W.T.Deng, X.G.Huang'12
L.McLerran, V.Skokov '14
…..

Fig. A.2. Magnetic field at the center of a gold-gold collision, for different impact parameters. Here the center of mass energy is 200 GeV per nucleon pair ($Y_0 = 5.4$).

# Comparison of magnetic fields

| | |
|---|---|
| The Earths magnetic field | 0.6 Gauss |
| A common, hand-held magnet | 100 Gauss |

| | |
|---|---|
| The strongest steady magnetic fields achieved so far in the laboratory | $4.5 \times 10^5$ Gauss |
| The strongest man-made fields ever achieved, if only briefly | $10^7$ Gauss |

| | |
|---|---|
| Typical surface, polar magnetic fields of radio pulsars | $10^{13}$ Gauss |
| Surface field of Magnetars | $10^{15}$ Gauss |

http://solomon.as.utexas.edu/~duncan/magnetar.html

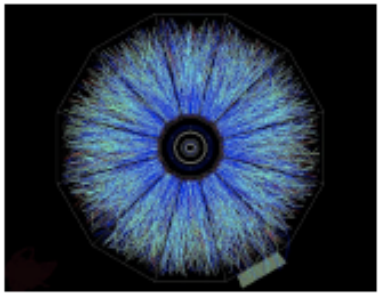

Heavy ion collisions: the strongest magnetic field ever achieved in the laboratory

Off central Gold-Gold Collisions at 100 GeV per nucleon

$$e\,B(\tau = 0.2\,\mathrm{fm}) \;=\; 10^3 \sim 10^4\ \mathrm{MeV}^2 \sim 10^{17}\,\mathrm{Gauss}$$

**Dedicated 2018 isobar run at RHIC: STAR Collaboration**

Plenary talks by Z.Xu (STAR), J.Liao

Featured Articles

# Isobar Collisions at RHIC to Test Local Parity Violation in Strong Interactions

D. E. Kharzeev & J. Liao

Pages 26-31 | Published online: 29 Mar 2019

Nuclear Physics News International

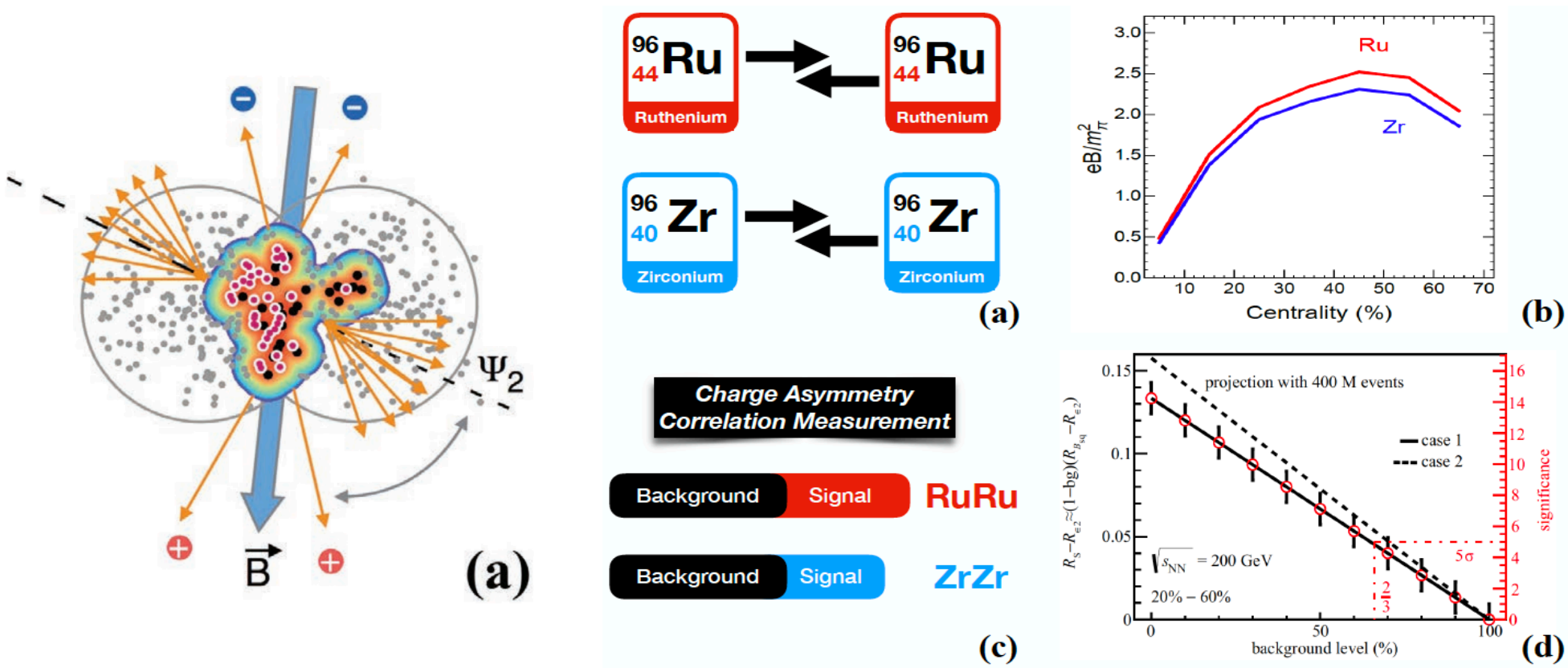

# EM fields in heavy ion collisions: a perturbative approach

Magnetohydrodynamics, charged currents and directed flow in heavy ion collisions

Umut Gürsoy[1], Dmitri Kharzeev[2,3] and Krishna Rajagopal[4]

PRC89(2014)054905

Magnetohydrodynamics and charged currents in heavy ion collisions

Umut Gürsoy[a], Dmitri Kharzeev[b], Krishna Rajagopal[c]

NPA931(2014)986

2014: Faraday, Hall effects, Gubser flow – charge-dependent $v_1$

Charge-dependent Flow Induced by Magnetic and Electric Fields in Heavy Ion Collisions

PRC98(2018)055201

Umut Gürsoy,[1] Dmitri Kharzeev,[2,3] Eric Marcus,[1] Krishna Rajagopal,[4] and Chun Shen[5]

2018: state-of-the art hydrodynamical flow, charge-dependent $v_1$,$v_2$,$v_3$

# EM fields in heavy ion collisions: a perturbative approach

The starting point: solve Maxwell equations on top of the expanding hydrodynamical background, neglect back-reaction on the bulk of hydro evolution – but extract the charge dependence of the flow

Complementary approaches include:

Perturbative treatments:
Indiana-Wuhan group (J. Liao, D. Hou, S. Shi, H. Zhang,…)
Iowa State group (K. Tuchin, E. Stewart)
Frankfurt group (D. Rischke, V. Roy, S. Pu)

Full MHD:
CMHD (G. Inghirami et al): full back-reaction, but no viscosity

# EM fields in heavy ion collisions: a delicate balance

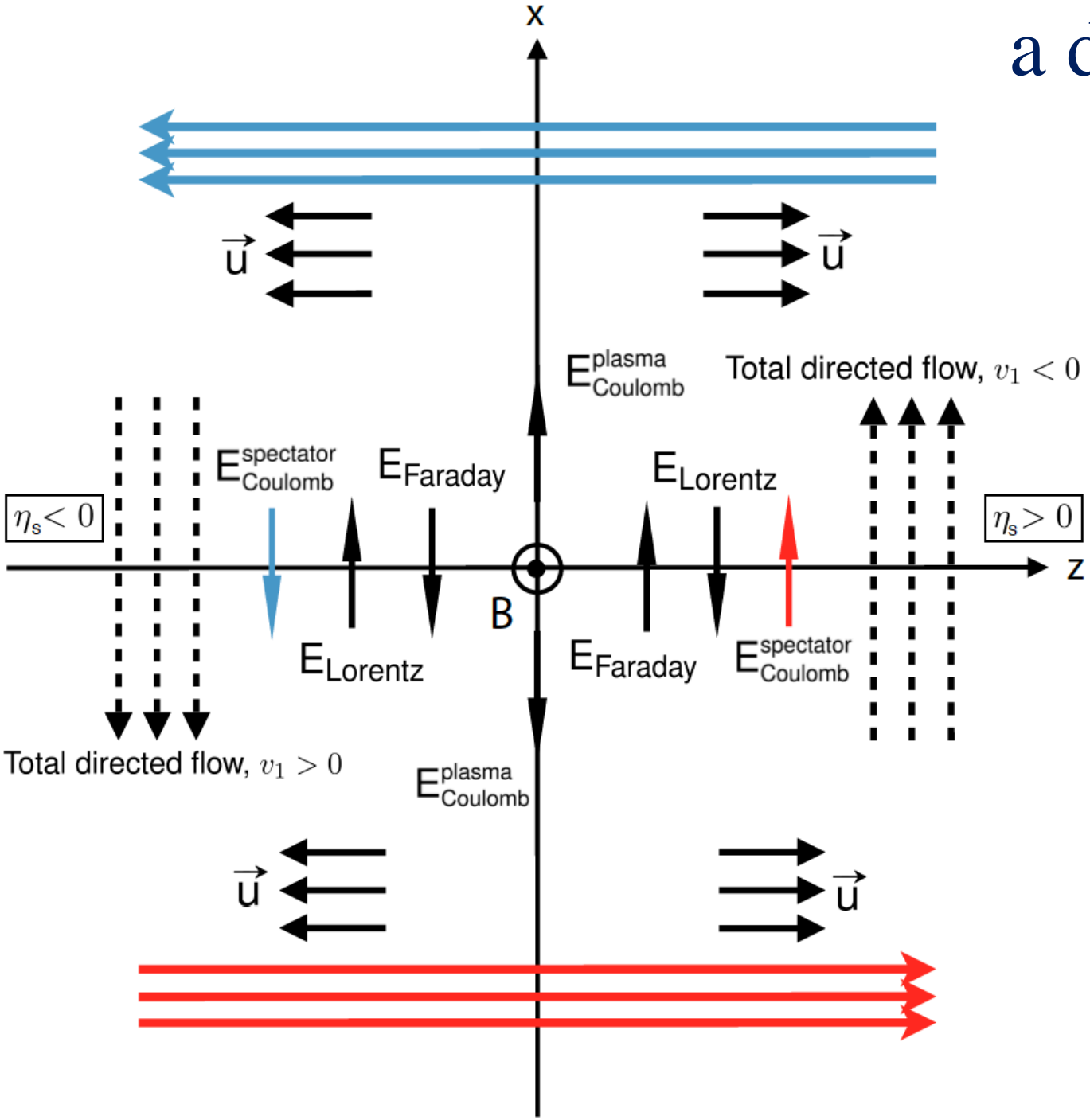


U. Gursoy, DK, E. Marcus, K. Rajagopal, C. Shen, PRC98(2018)055201

# The approach, in more detail:

- Hydro evolution: iEBE-VISHNU Talk by C. Shen

  C. Shen, Z. Qiu, H. Song, J. Bernhard, U. Heinz ’14

- EOS from lattice QCD + hadron resonance gas

  P. Huovinen, P. Petreczky ’10

- Parameterization of T dependence of shear viscosity

  H. Niemi, G. Denicol, P. Huovinen, E. Molnar, D. Rischke ’11

- Constant electric conductivity $\sigma = 4.5$ MeV

- Cooper-Frye freeze-out with charge-dependent velocity shift due to EM fields

# The results:

Electric field

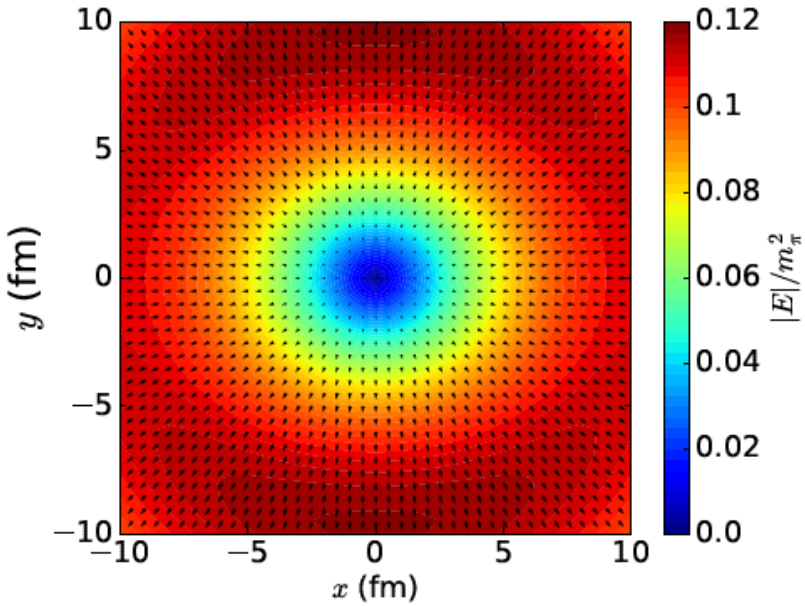


Magnetic field

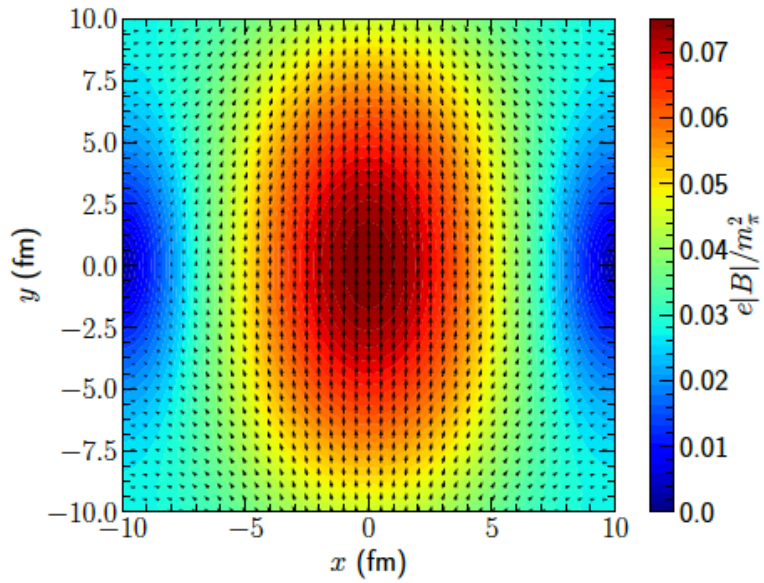


FIG. 2. The electric (left) and magnetic (right) fields in the transverse plane at $z = 0$ in the lab frame at a proper time $\tau = 1$ fm/c after a Pb+Pb collision with 20-30% centrality (corresponding to impact parameters in the range 6.24 fm $< b <$ 9.05 fm) and with a collision energy $\sqrt{s} = 2.76$ ATeV.

Magnetic field is dominated by spectators at τ=1 fm/c

# Symmetry properties of the charge-dependent flow:

Define

$$\Delta v_n \equiv v_n(h^+) - v_n(h^-)$$

It is odd under rapidity inversion for odd harmonics:

$$\Delta v_{2n-1}(\eta_s) = -\Delta v_{2n-1}(-\eta_s)$$

and even for even harmonics.

Can be proven analytically (consequence of P invariance).

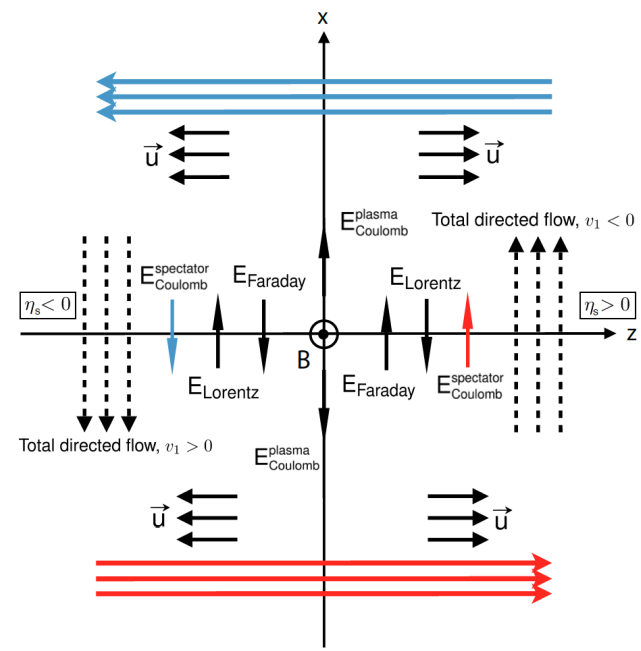

# Charge-dependent flow: the results

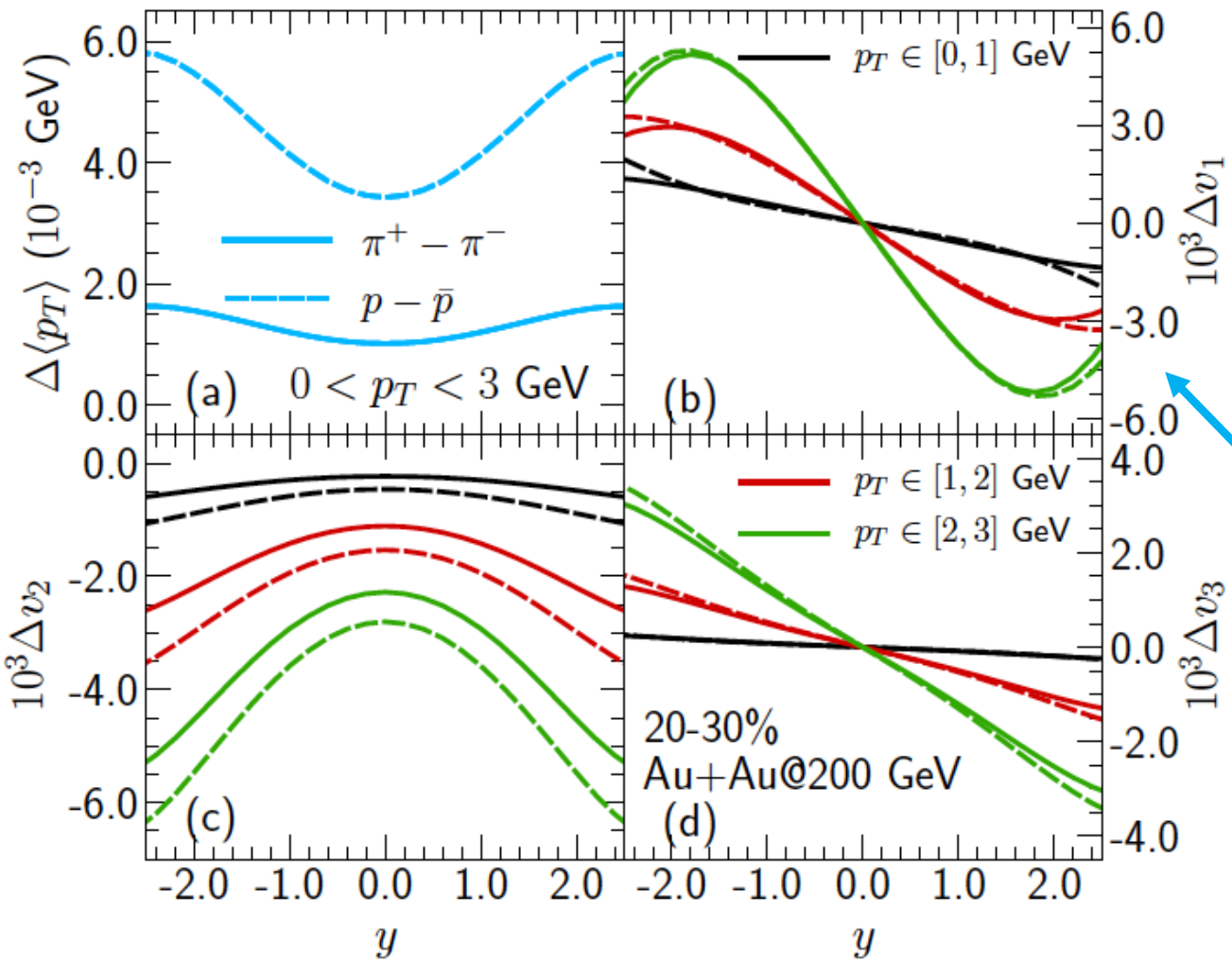


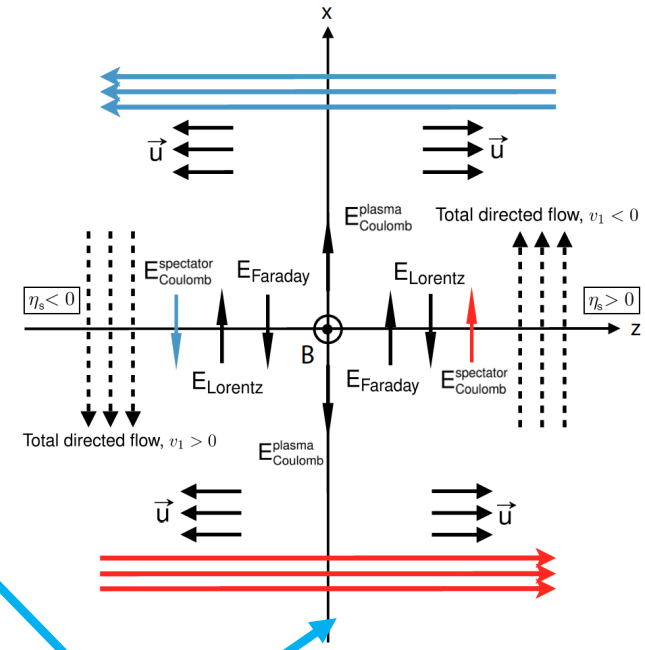


Faraday + Coulomb > Lorentz
(partial cancellation)

detectable charge dependence, stronger for protons
(“blueshift”)

# Charge-dependent flow: RHIC vs LHC energies

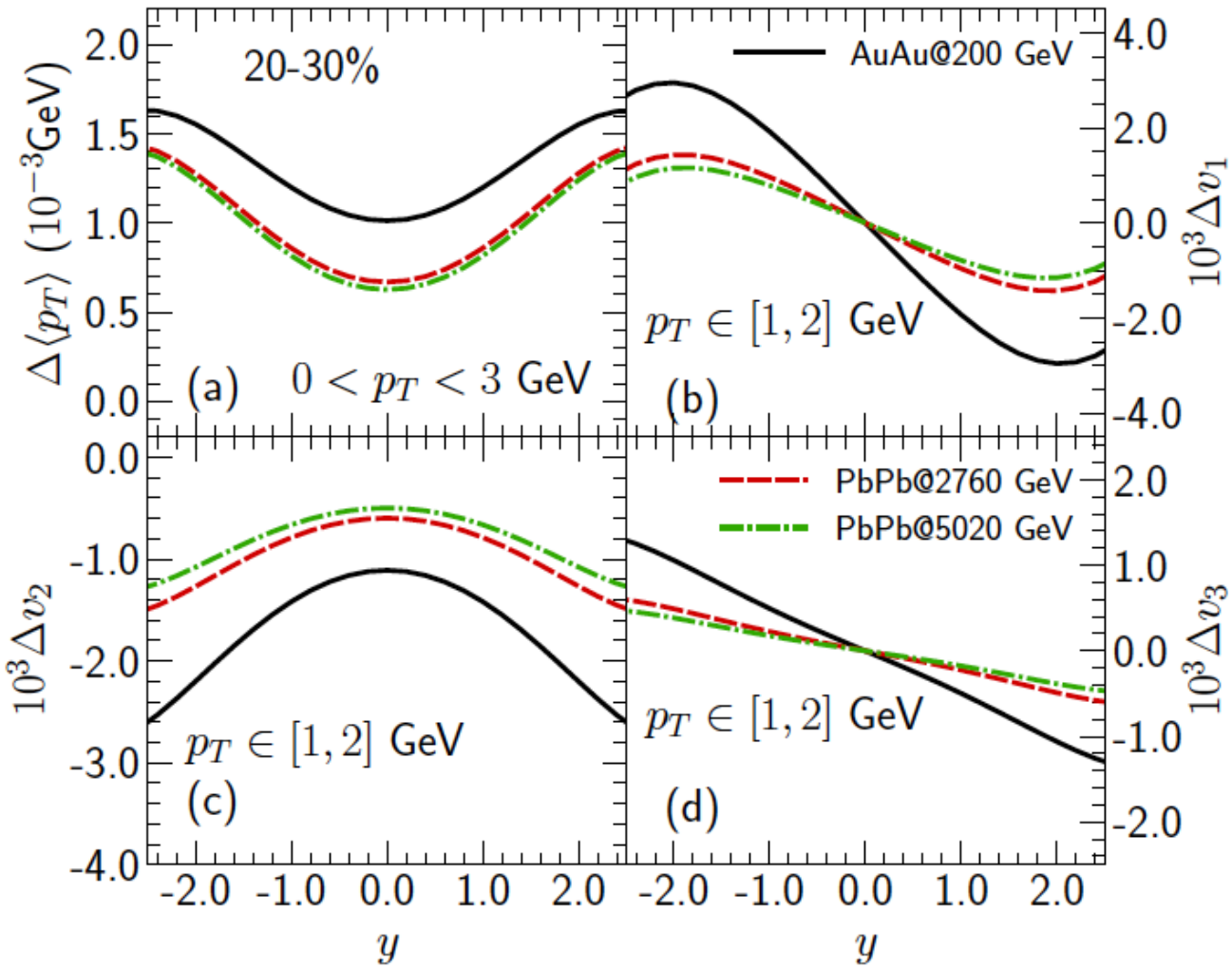


At LHC, spectators pass by more quickly, the fireball lives longer – smaller EM effects

# Charge-dependent flow: dependence on conductivity

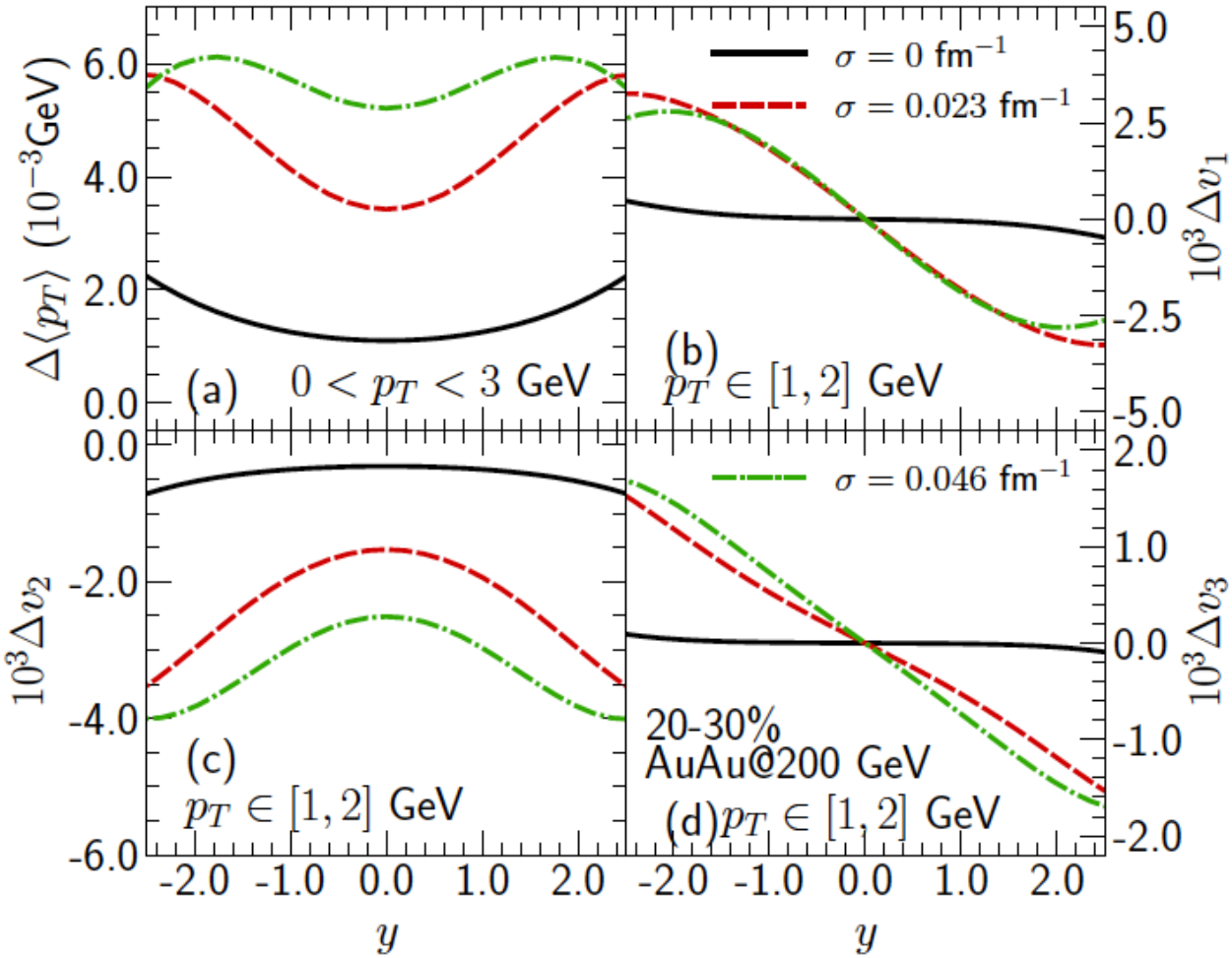


Strong dependence on conductivity
(= lifetime of magnetic field)

# Assumptions and shortcomings

- Conductivity and drag constant in space and time, temperature independent

- Neglect event-by-event fluctuations of geometry (use event-averaged geometry)

- Neglect back-reaction, e.g. shorting of electric field

May reduce the magnitude of even charge-dependent harmonics, and change the sign of the odd ones – full resistive MHD?

# Comparison to the data

STAR Review: version A1 May 7, 2019

First observation of the directed flow of $D^0$ and $\overline{D^0}$ in Au+Au collisions at $\sqrt{s_{NN}} = 200$ GeV

STAR Collaboration
arXiv:1905.02052

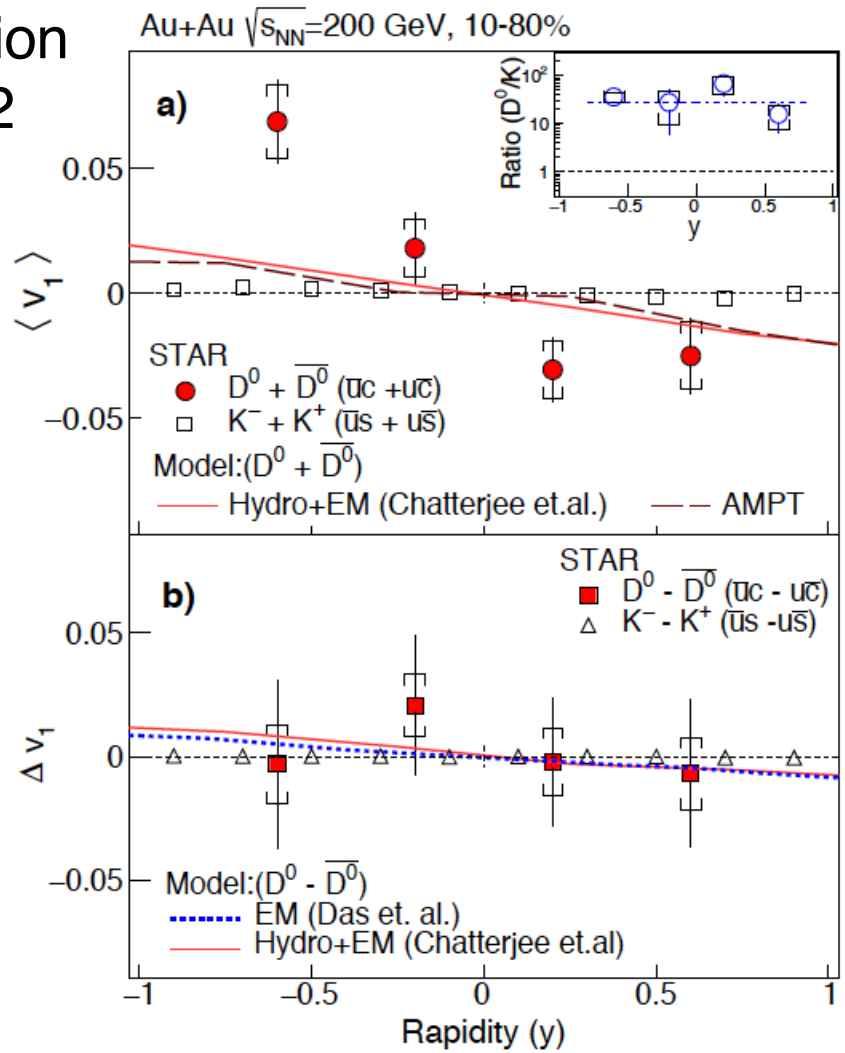


Plenary talk by
Z. Xu (STAR)

Charge dependence is not visible (for K's), smaller than predicted

# Comparison to the data

Plenary talk by
M. Weber (ALICE) arXiv:1910:14406

CERN-EP-2019-241
28 October 2019

**Probing the effects of strong electromagnetic fields with charge-dependent directed flow in Pb–Pb collisions at the LHC**

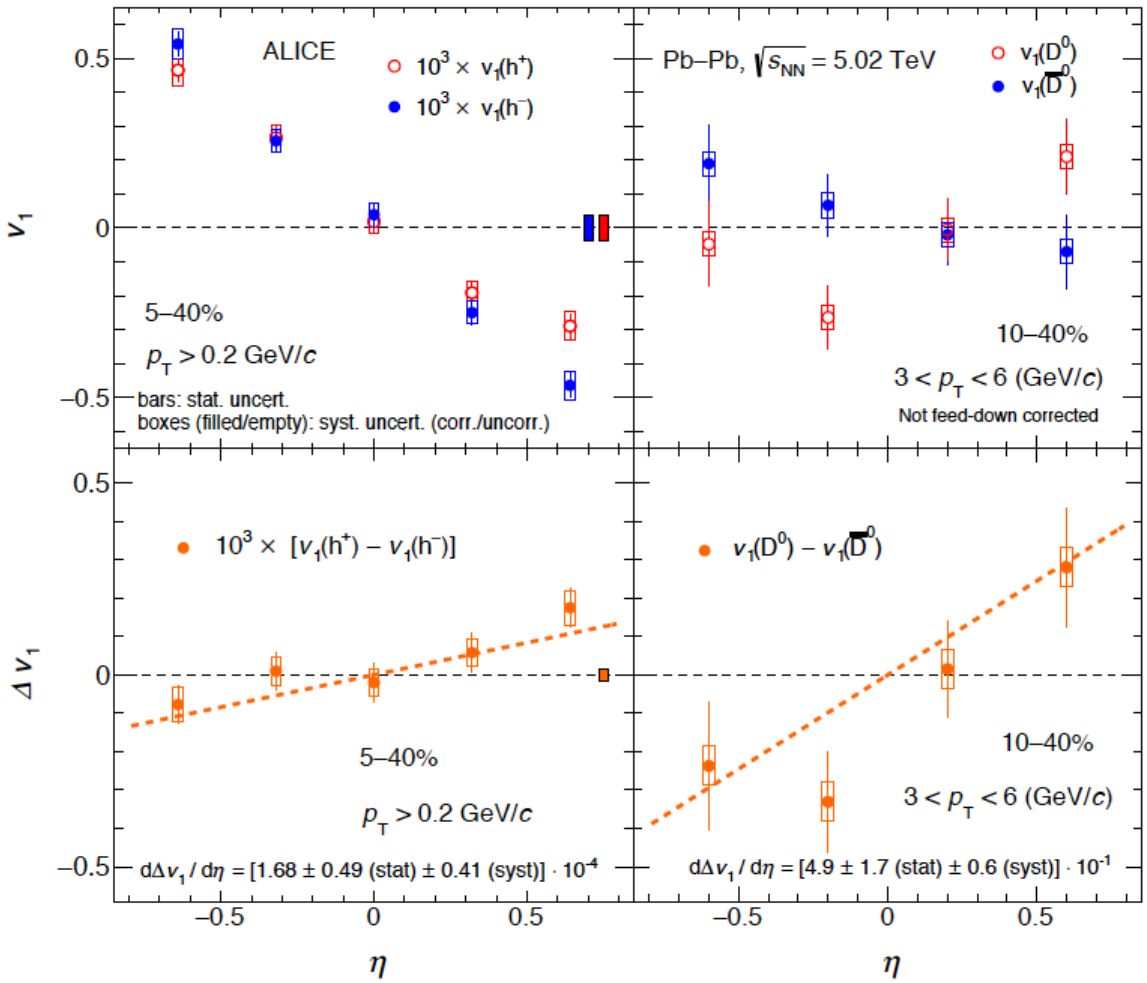


Same order of magnitude, but wrong sign!

Most likely, the effect of back-reaction - **Need MHD!**

Charm: important probe of early magnetic field
S.Das et al, PLB768(2017)260
S.Chatterjee and P.Bozek (2018)

# Towards the CMHD in heavy ion collisions (CMHD – Chiral MagnetoHydroDynamics)

## Magnetic fields in heavy ion collisions: flow and charge transport

Gabriele Inghirami,[1,2] Mark Mace,[1,2] Yuji Hirono,[3,4] Luca Del Zanna,[5,6,7] Dmitri E. Kharzeev,[8,9,10] and Marcus Bleicher[11,12,13,14]

arXiv:1908.07605

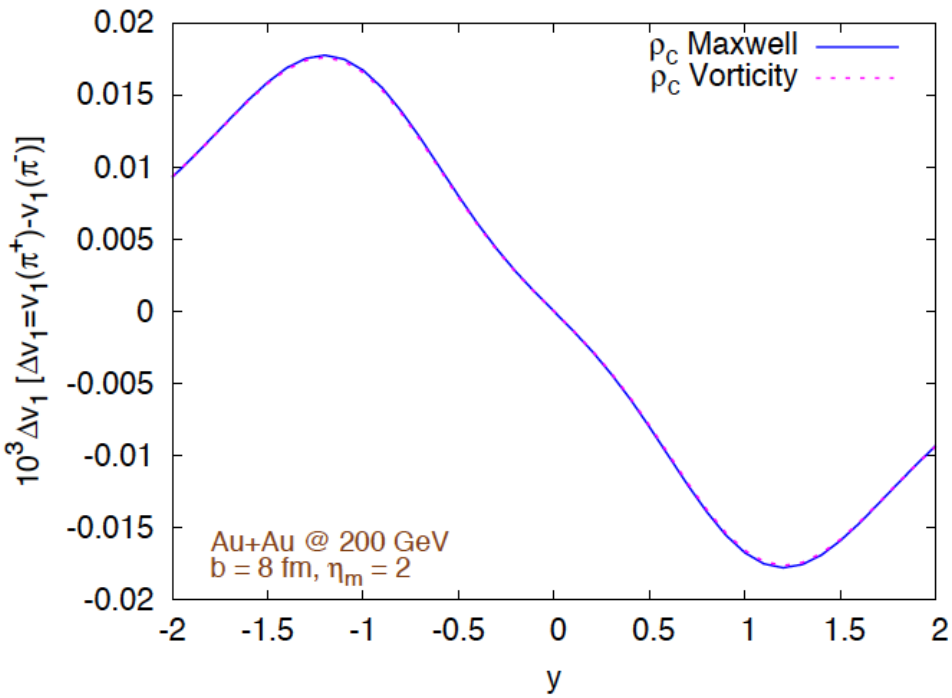


CMHD (with full back-reaction!), based on ECHO-QGP; ideal (3+1) hydro evolution

Charge dependence of pion directed flow

Magnitude consistent with limits from STAR data; **same sign as perturbative result!**

# Magnetic fields in heavy ion collisions: flow and charge transport

Gabriele Inghirami,[1,2] Mark Mace,[1,2] Yuji Hirono,[3,4] Luca Del Zanna,[5,6,7] Dmitri E. Kharzeev,[8,9,10] and Marcus Bleicher[11,12,13,14]

arXiv:1908.07605

## Electric charge density at mid-rapidity:

No CME

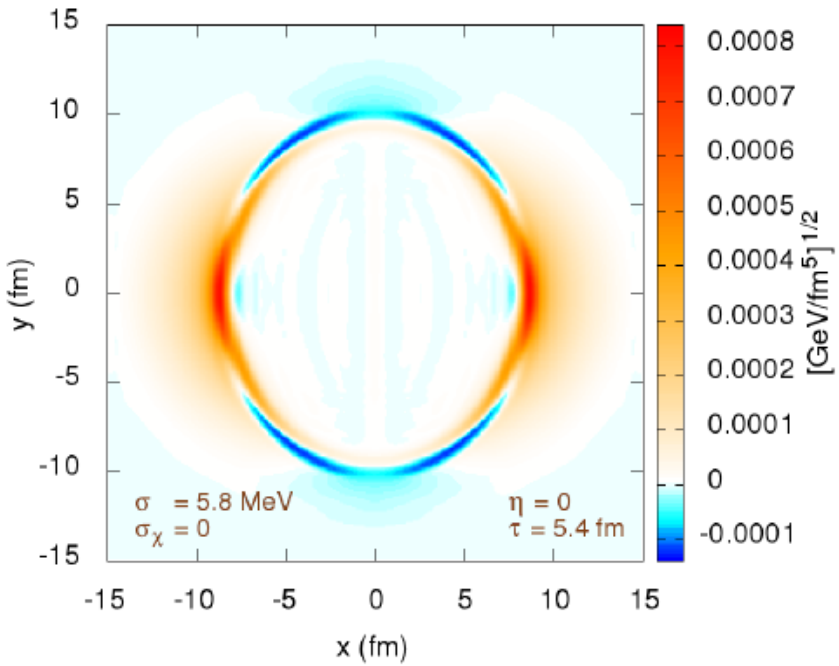


CME

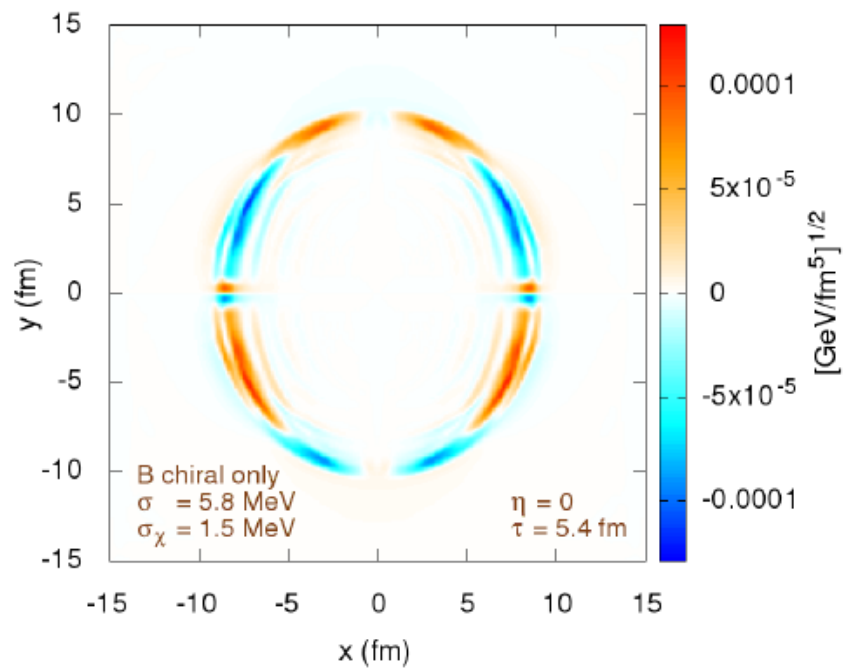


Charge separation along B!

# Summary

- EM fields are clearly present in heavy ion collisions, with an expected order-of-magnitude strength
  [+ vacuum birefringence – Talk by Z.Xu (STAR)]

- They manifest themselves through charge-dependent flow, which is very sensitive to the space-time evolution of the plasma

- The dynamics of the EM field evolution is subtle – sensitive to flow velocity and field back-reaction. It is not yet fully understood (the sign problem!), so **more work has to be - and is being - done!**