SPONSORED BY THE

Federal Ministry of Education and Research

Karlsruhe Institute of Technology

Realization of a state machine based detection for Track Segments in the Trigger System of the Belle II Experiment

Kai Unger[1], Steffen Bähr[1], Jürgen Becker[1], Yoshihito Iwasaki[2], KyungTae Kim[3], Yun-Tsung Lai[2]

[1] Karlsruher Institut of Technology (KIT), [2] High Energy Accelerator Research Organization (KEK), [3] Korea University,

Institute for Information Processing Technologies (ITIV)

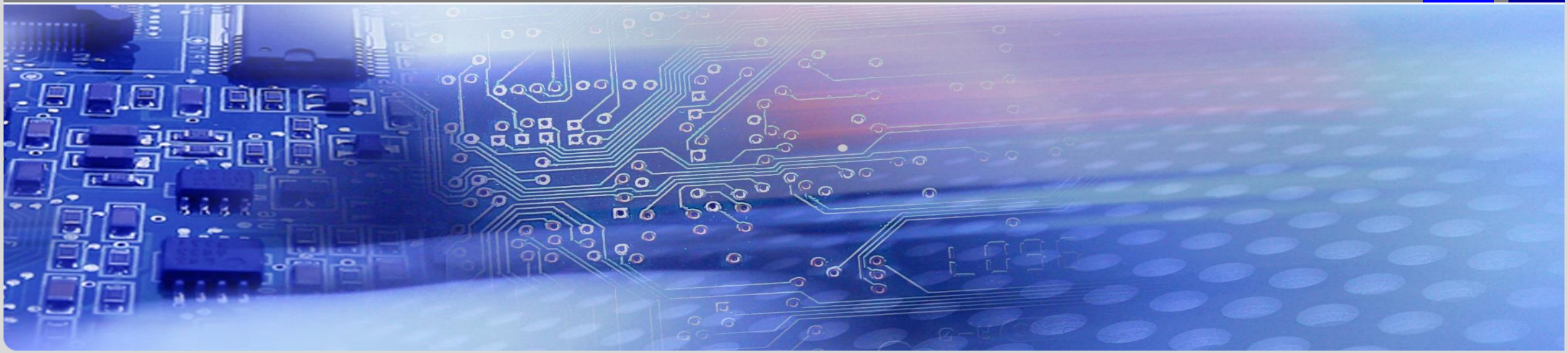

Belle II

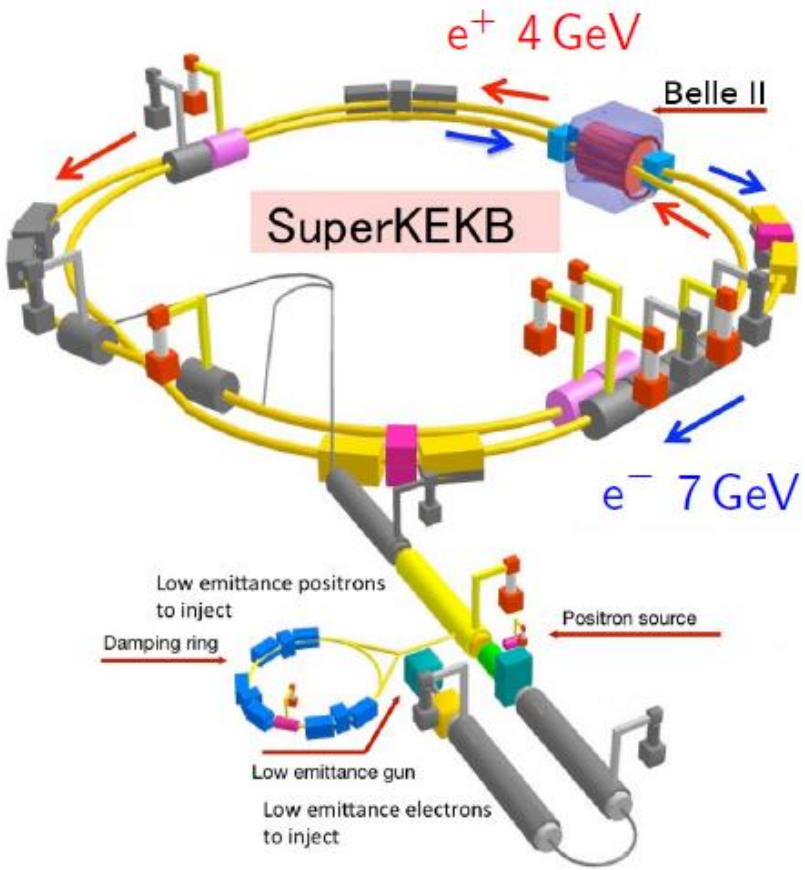

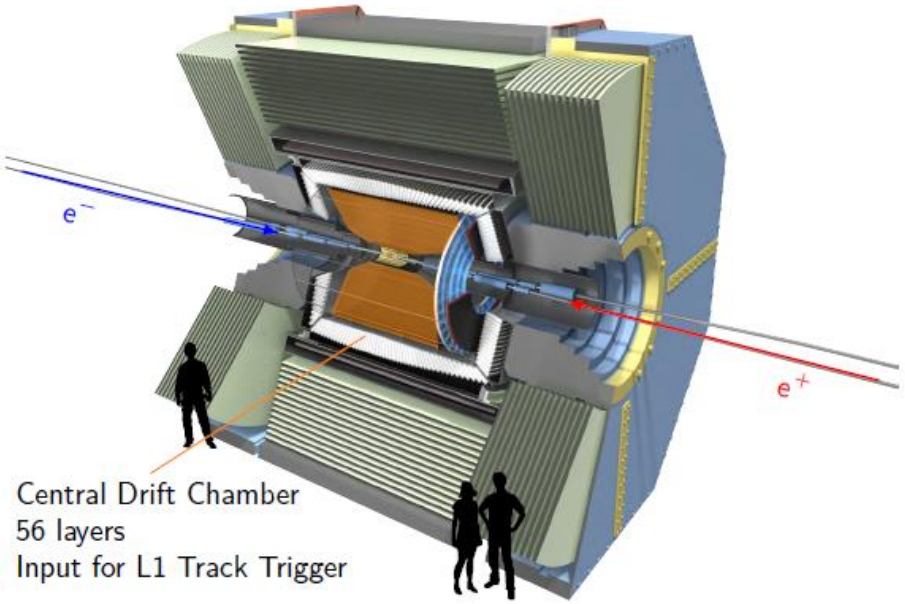

- 40 * Luminosity of predecessor KEKB
  - **$8*10^{35}$ cm^{-2} s^{-1}**
- Asymmetric e^+e^- collider
- 32 MHz Data rate

Belle II L1 Trigger System

- Multiple Detectors and Trigger chains
- ASIC based readout
- FPGA based Trigger (Xilinx Virtex 6)
- The Trigger System works with reduced data width
- 5 µs for the L1 Trigger System

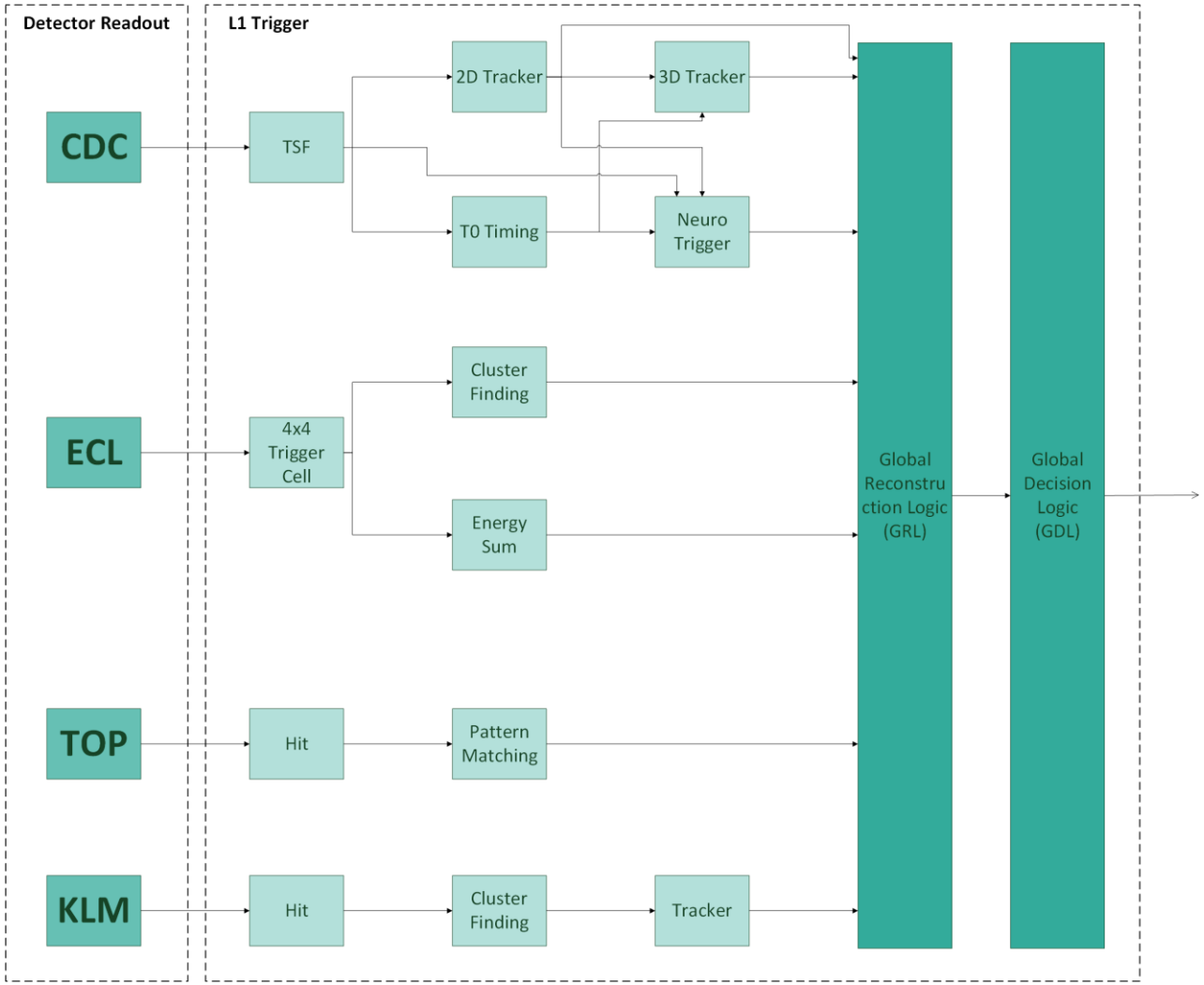

L1 Trigger System – Track Segment Finder

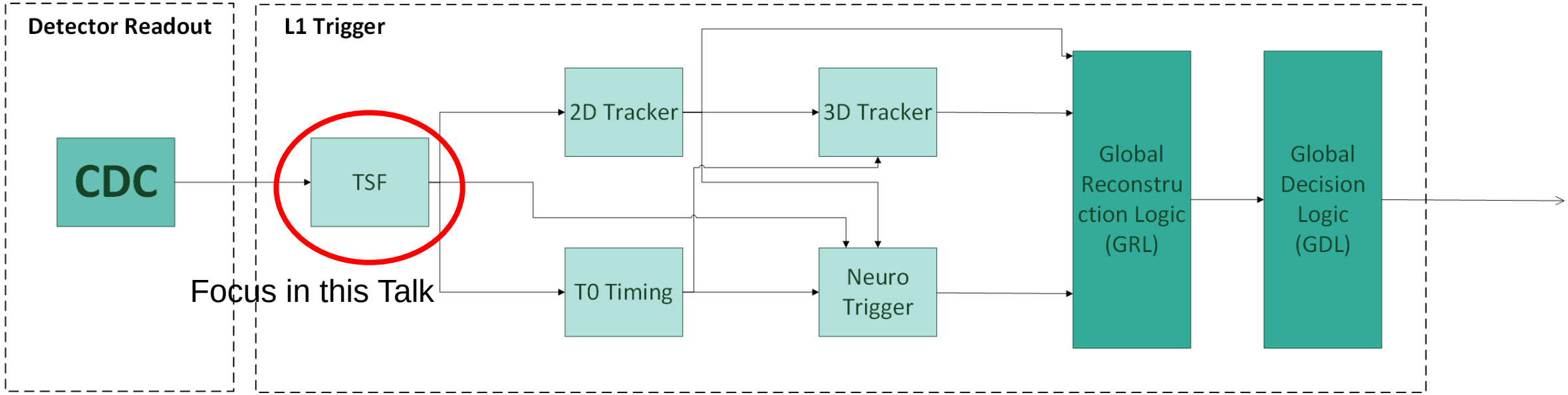

- Main System for Track reconstitution
- Track Segment Finder (TSF)
- First System for data reduction

DETECTOR

CDC Central Drift Camber

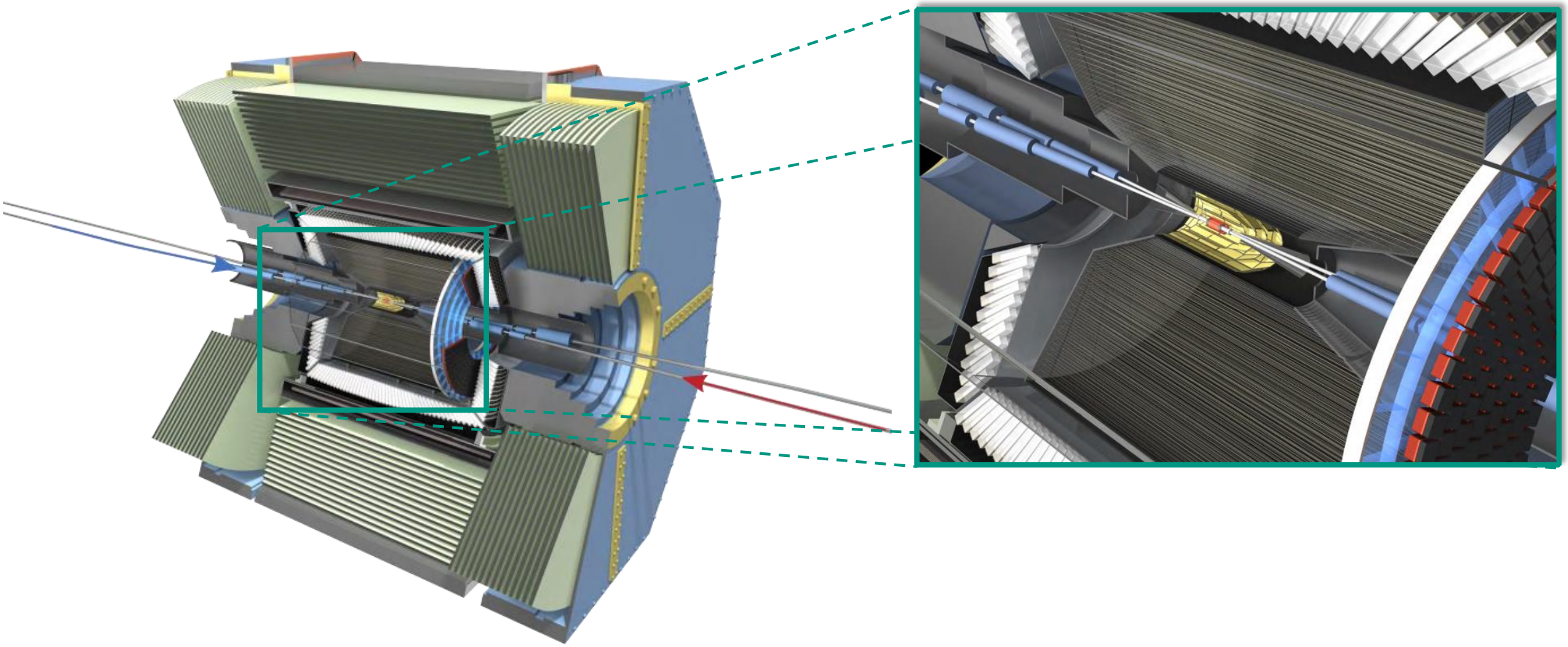

CDC Central Drift Camber

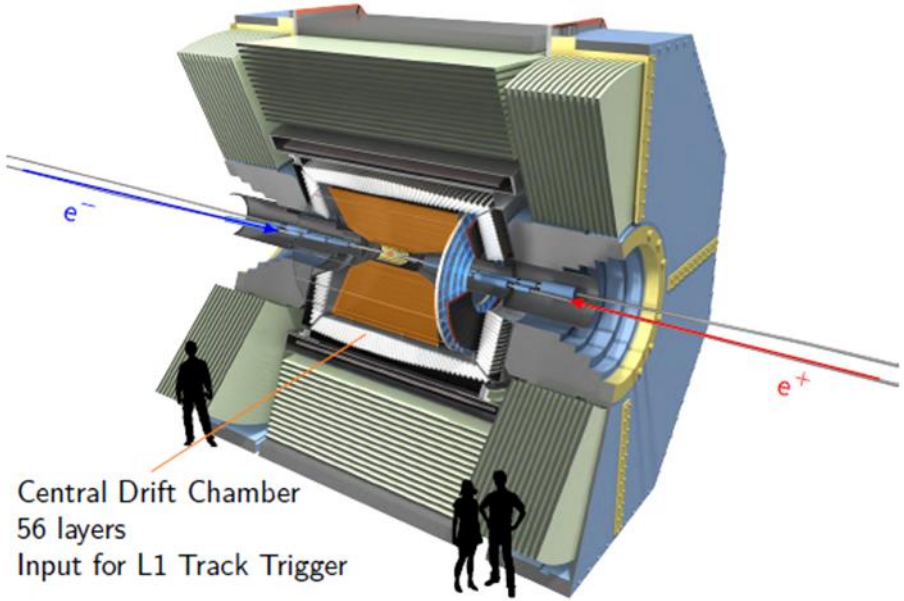

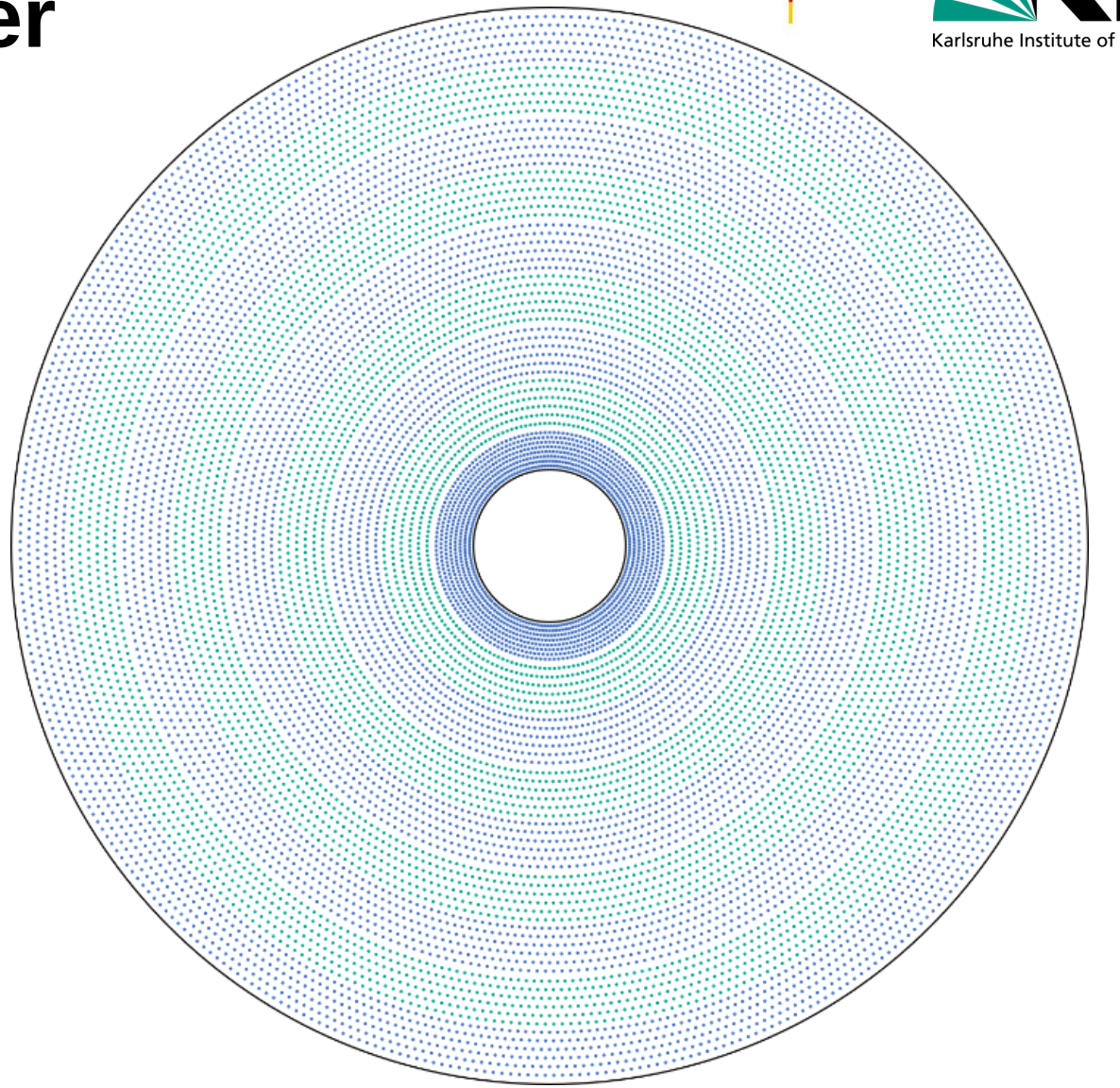

- Central Drift Camber
  - 14336 Trigger Cells
  - 56 layers

CDC Central Drift Camber

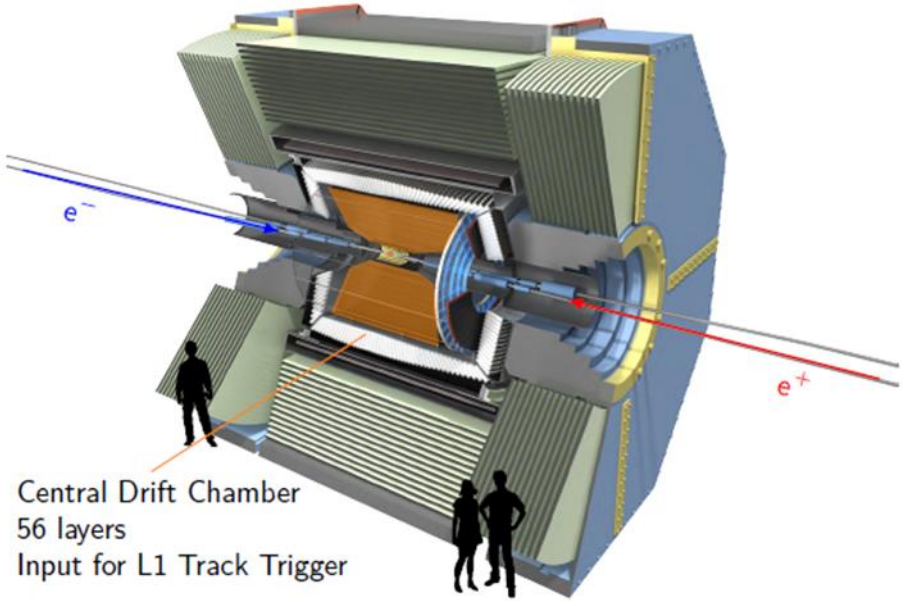

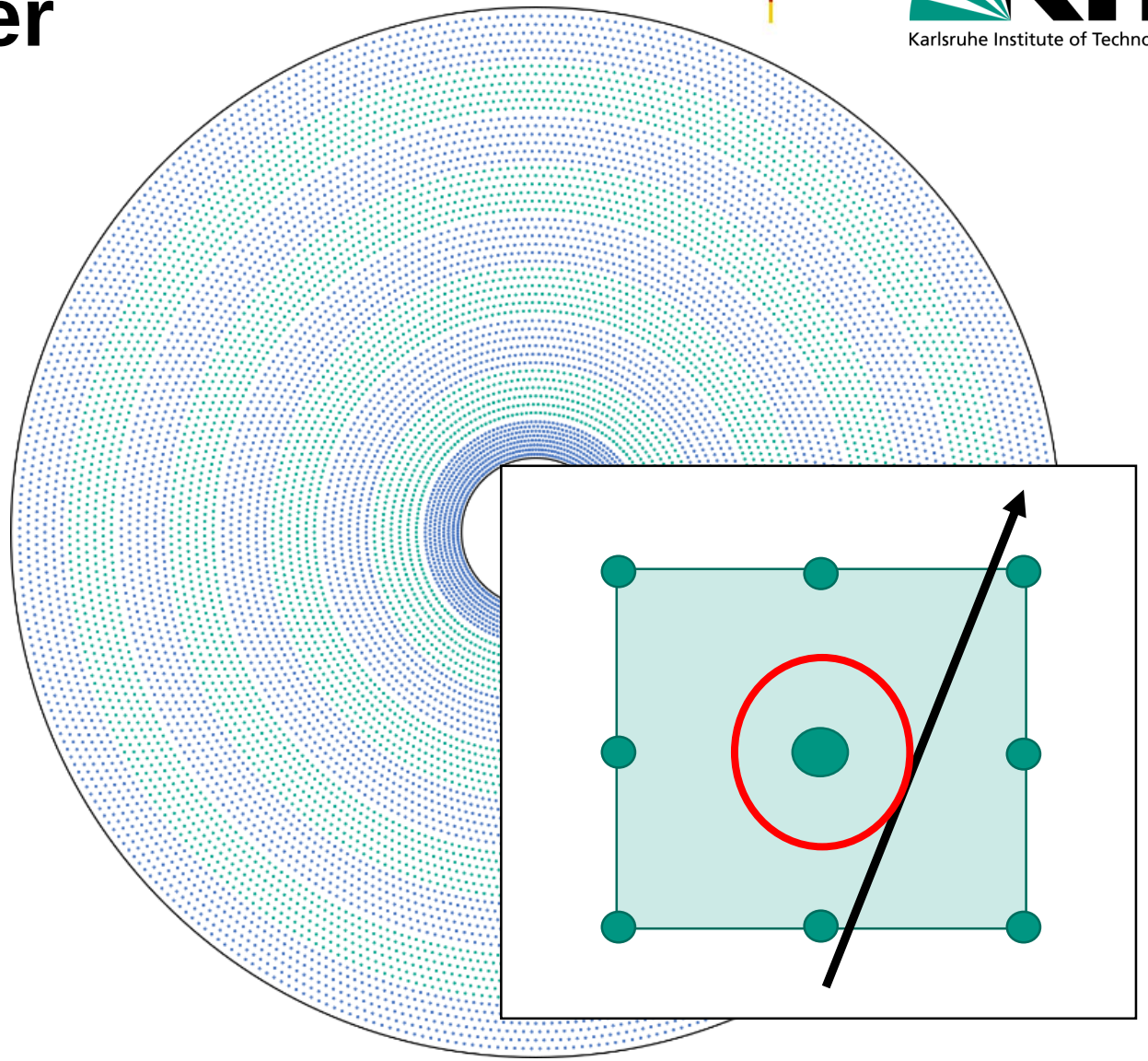

- Trigger Cell
  - Sens wires 14 336
  - Field wires 42 240

CDC Central Drift Camber

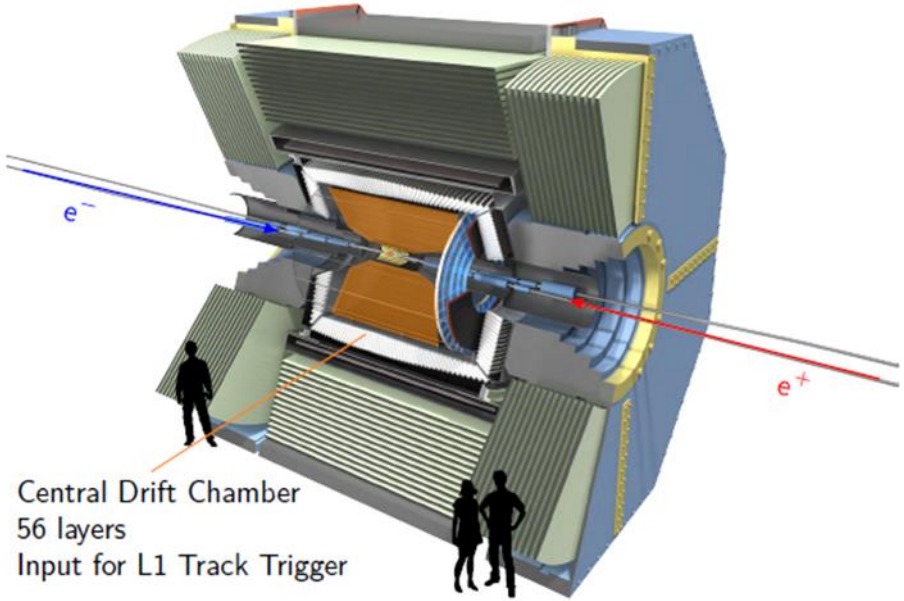

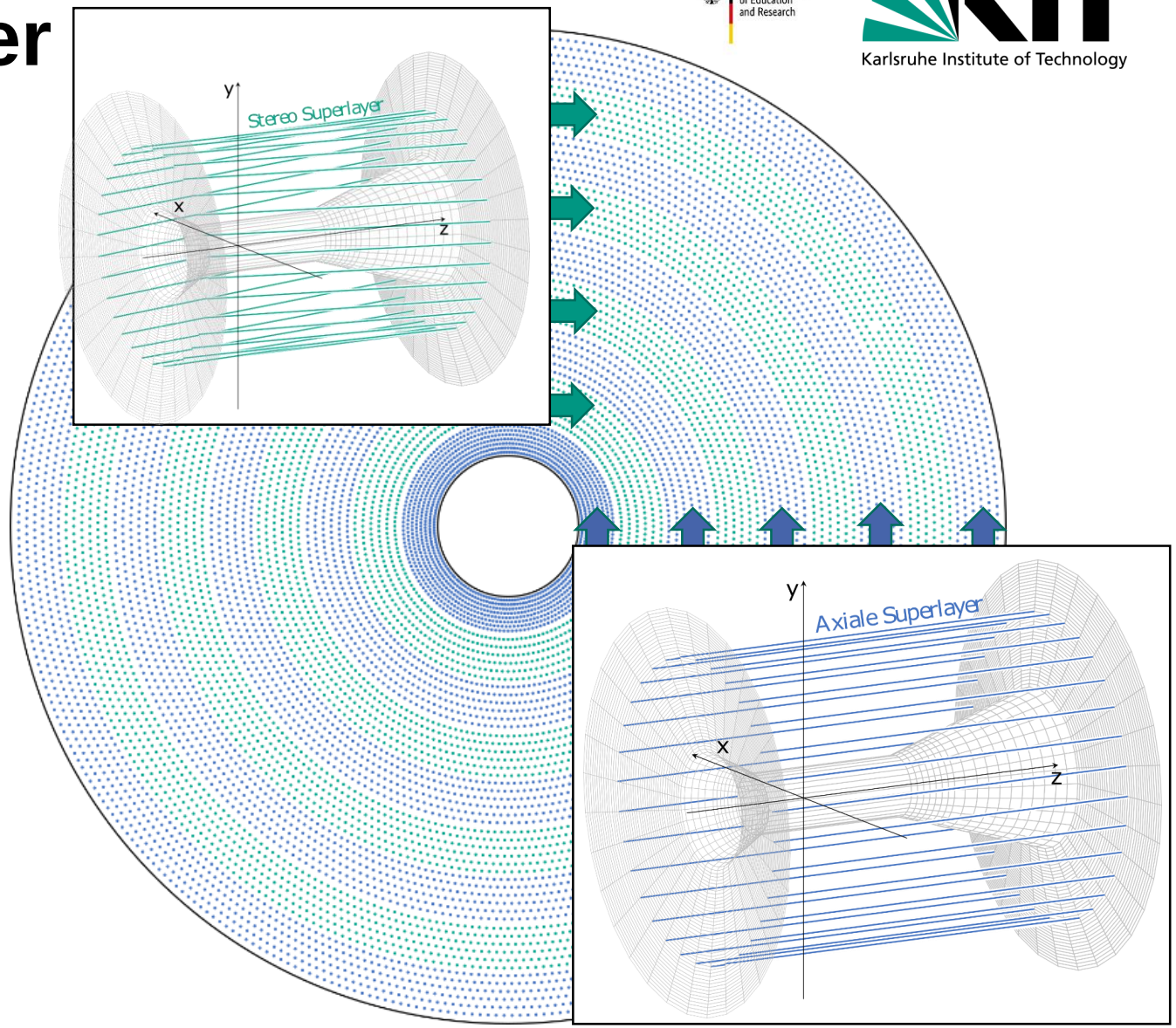

- 9 Superlayer
  - 4 Stereo Superlayer
  - 5 Axial Superlayer

CDC Central Drift Camber

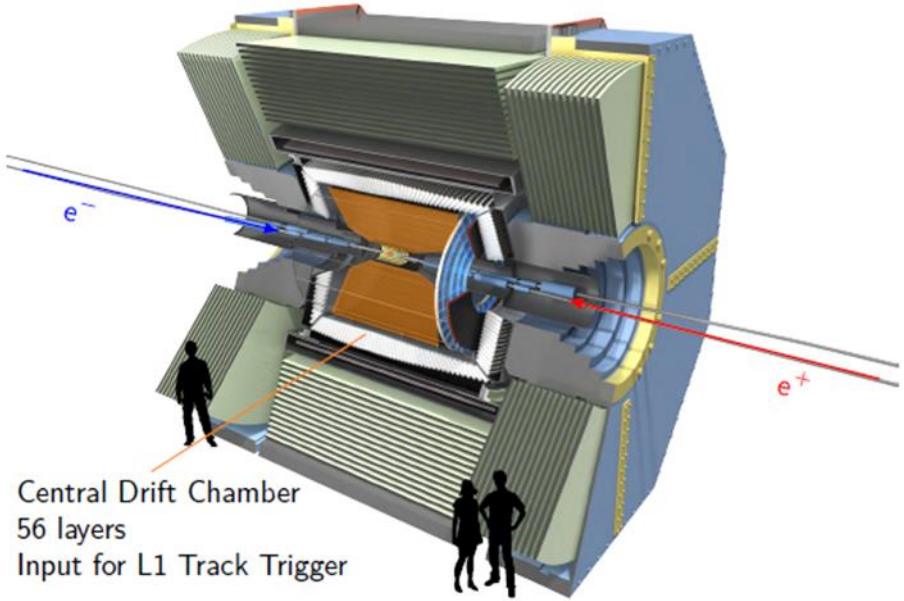

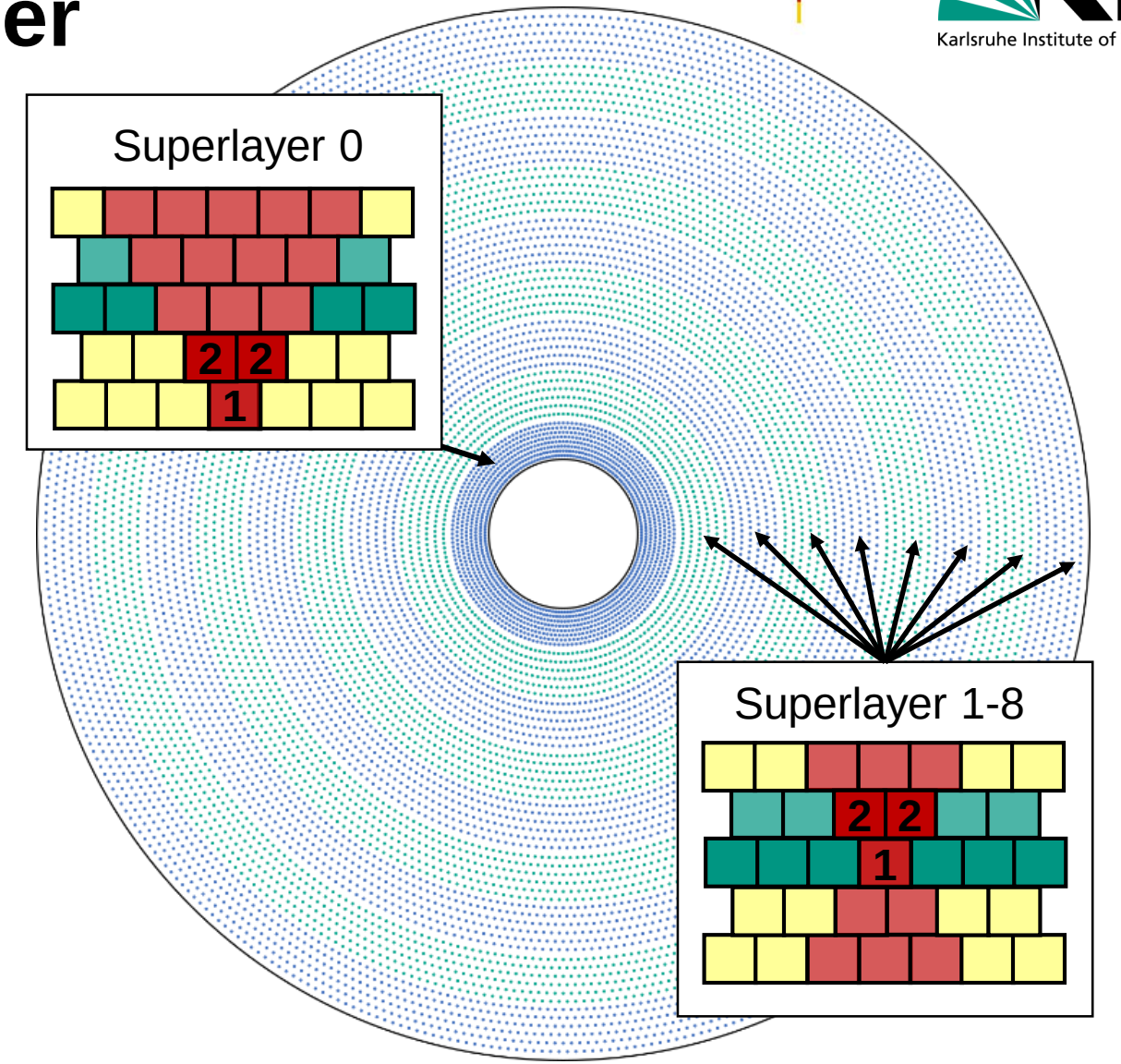

- 2 Typs of Track Segment
  - Superlayer 0
  - Superlayer 1-8

CONCEPT

Track Segment

- 2336 Track Segments in 9 Superlayers
  - 14336 Trigger Cells
  - Reduce the data
- Limits the tracks to tracks from the origin of the collision
  - (about 30° from the collision origin)
- Two Types of Priority
  - First Priority
  - Second Priority (need 4 additional lines hit)
- Add additional Information for following Trigger Systems

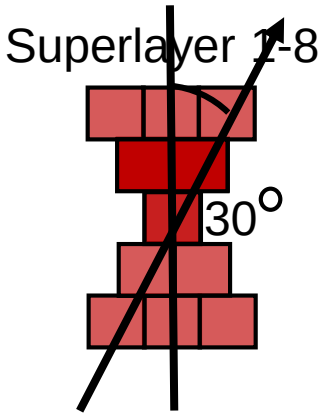

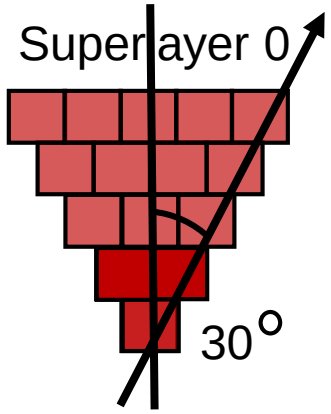

Track Segment

- 2336 Track Segments in 9 Superlayers
  - 14336 Trigger Cells
  - Reduce the data
- Limits the tracks to tracks from the origin of the collision
  - (about 30° from the collision origin)
- Two Types of Priority
  - First Priority
  - Second Priority (need 4 additional lines hit)
- Add additional Information for following Trigger Systems

Superlayer 1-8

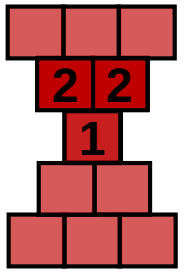

Superlayer 0

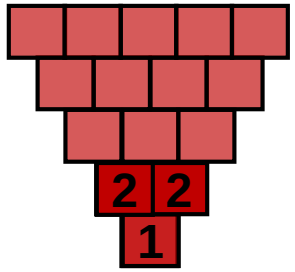

State Machine TSF

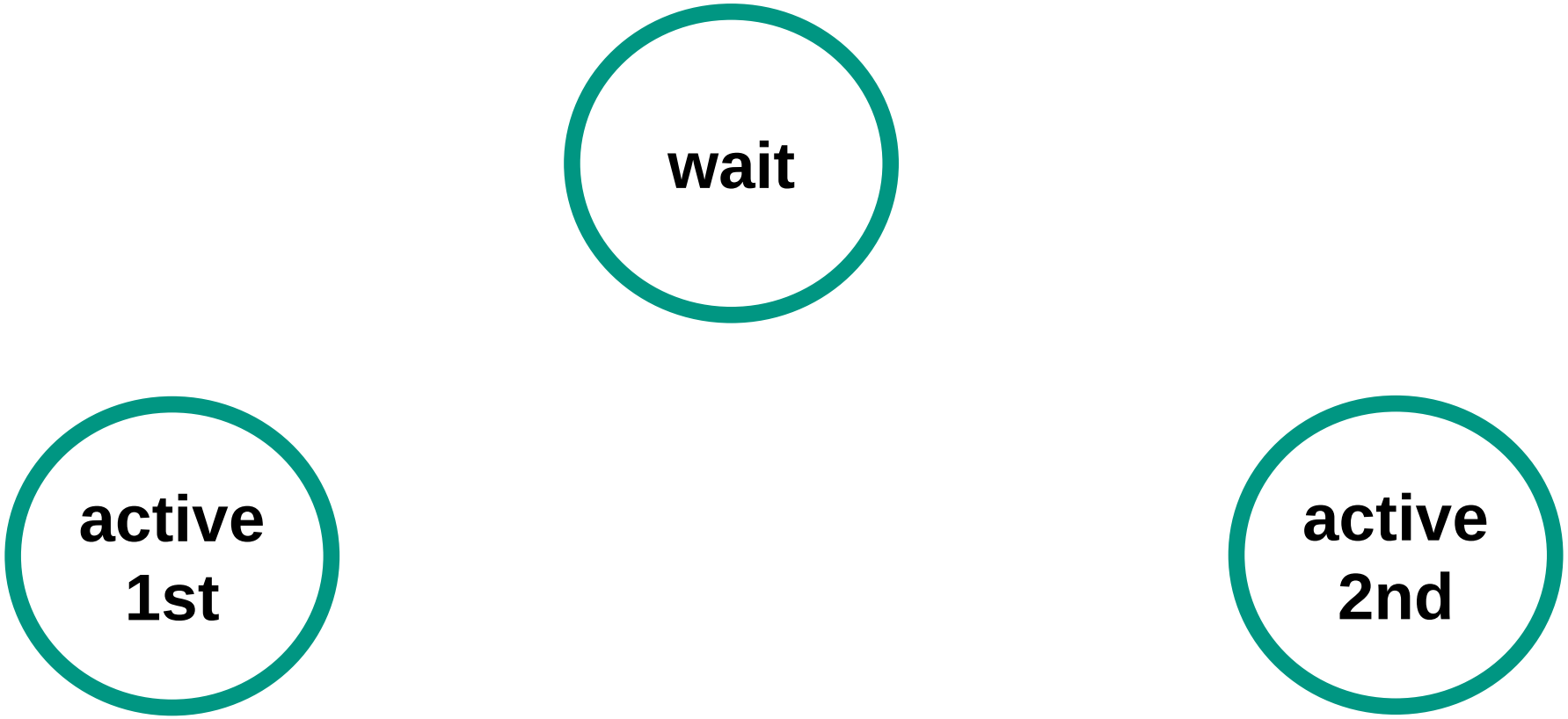

Second Priority Hit

- Second Priority Hit needs 4 additional Hits in total
- Only possible from the wait statement
- Set the counter to 64 clock cycles (127 MHz ~500ns)
- If the conuter is zero the state go's back to wait

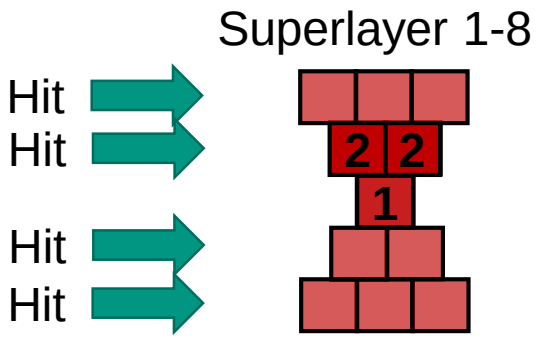

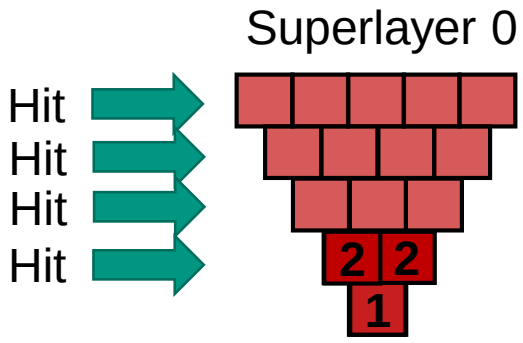

State Machine TSF

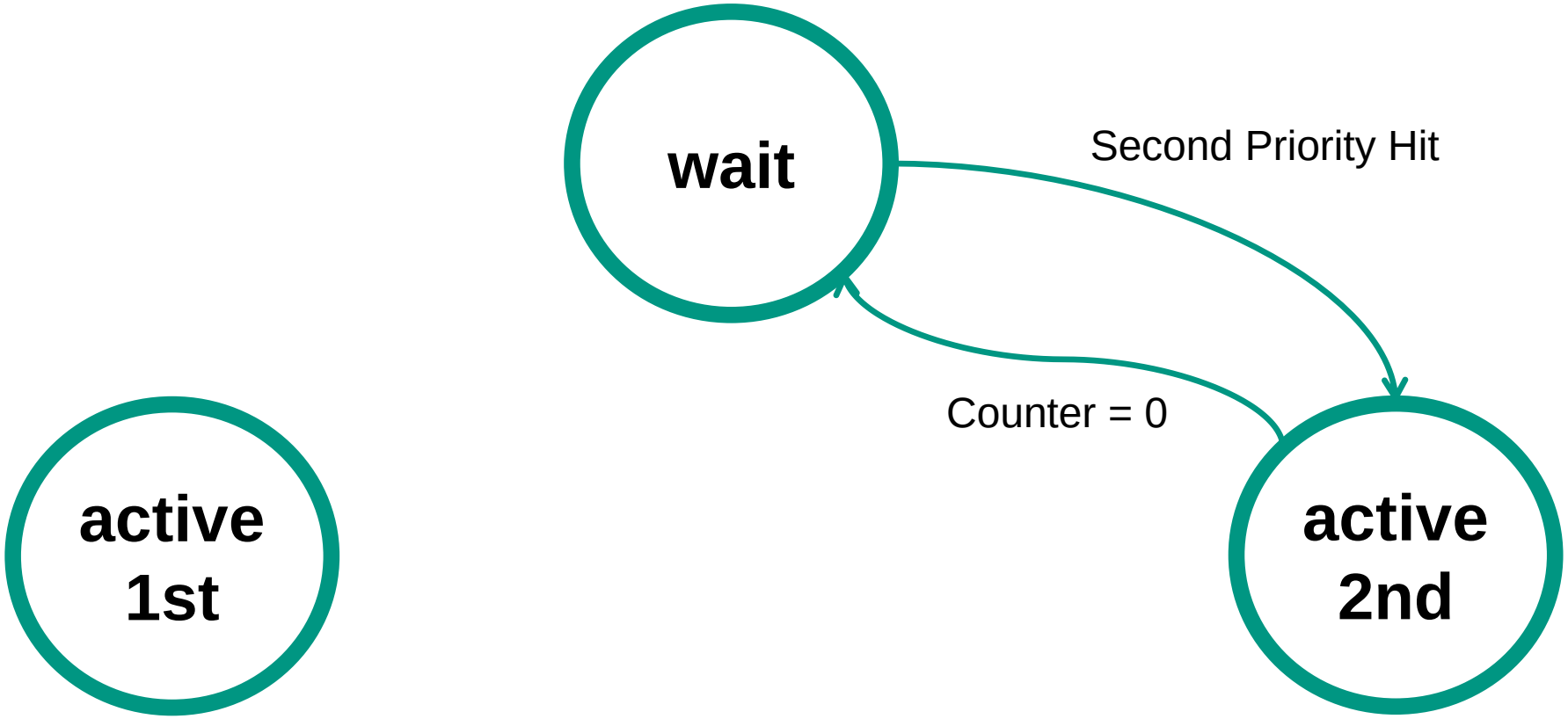

First Priority Hit

- Needs a First Priority Hit
- Can go from wait and second priority
- Set the counter to 64 clock cycles (127 MHz ~500ns)
- If the conuter is zero the state gos back to wait

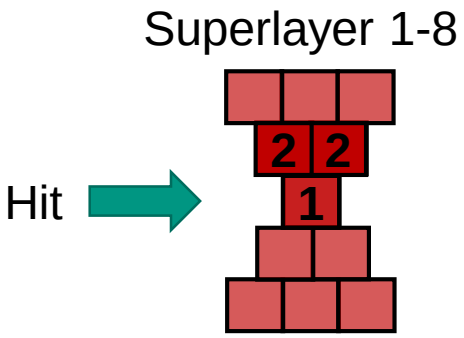

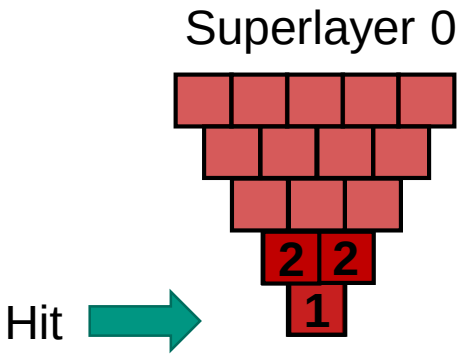

State Machine TSF

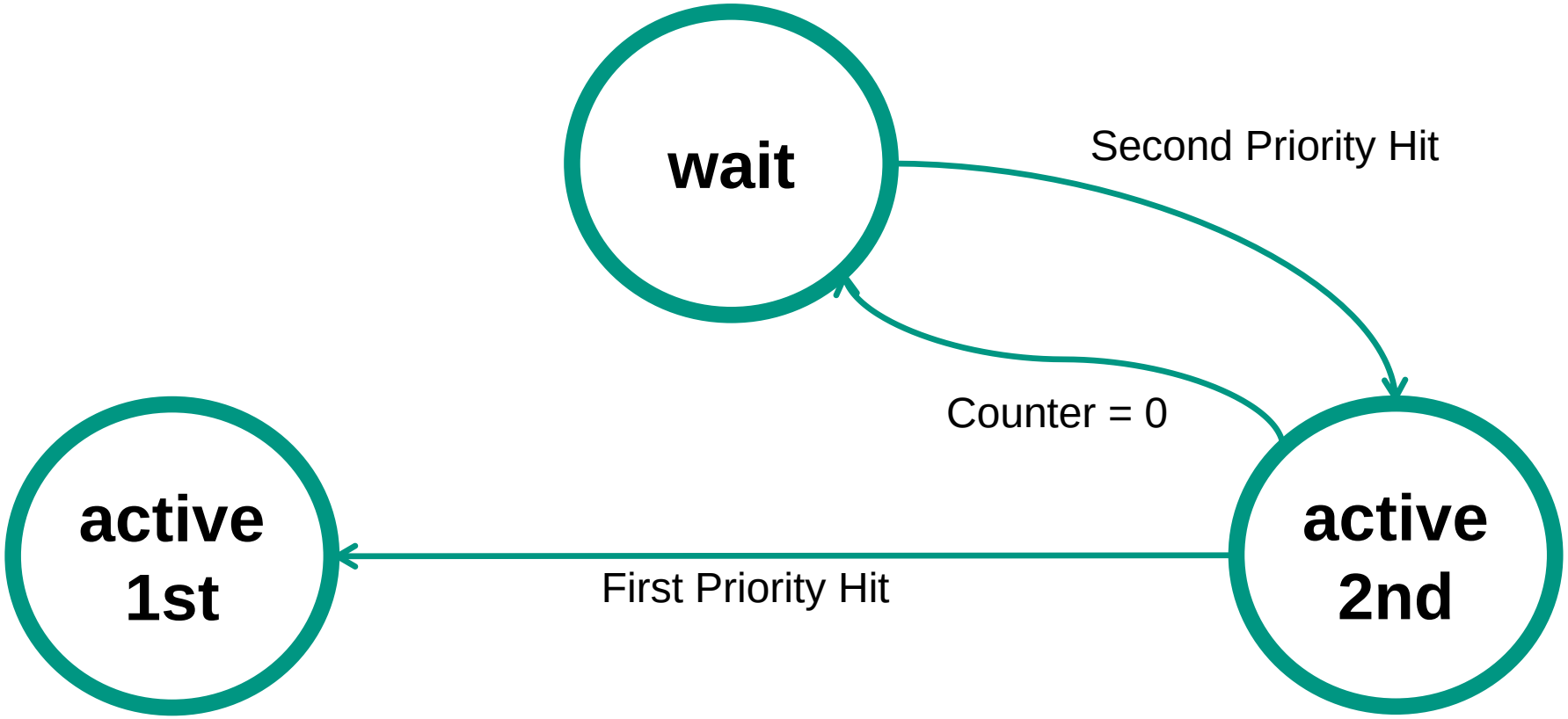

State Machine TSF

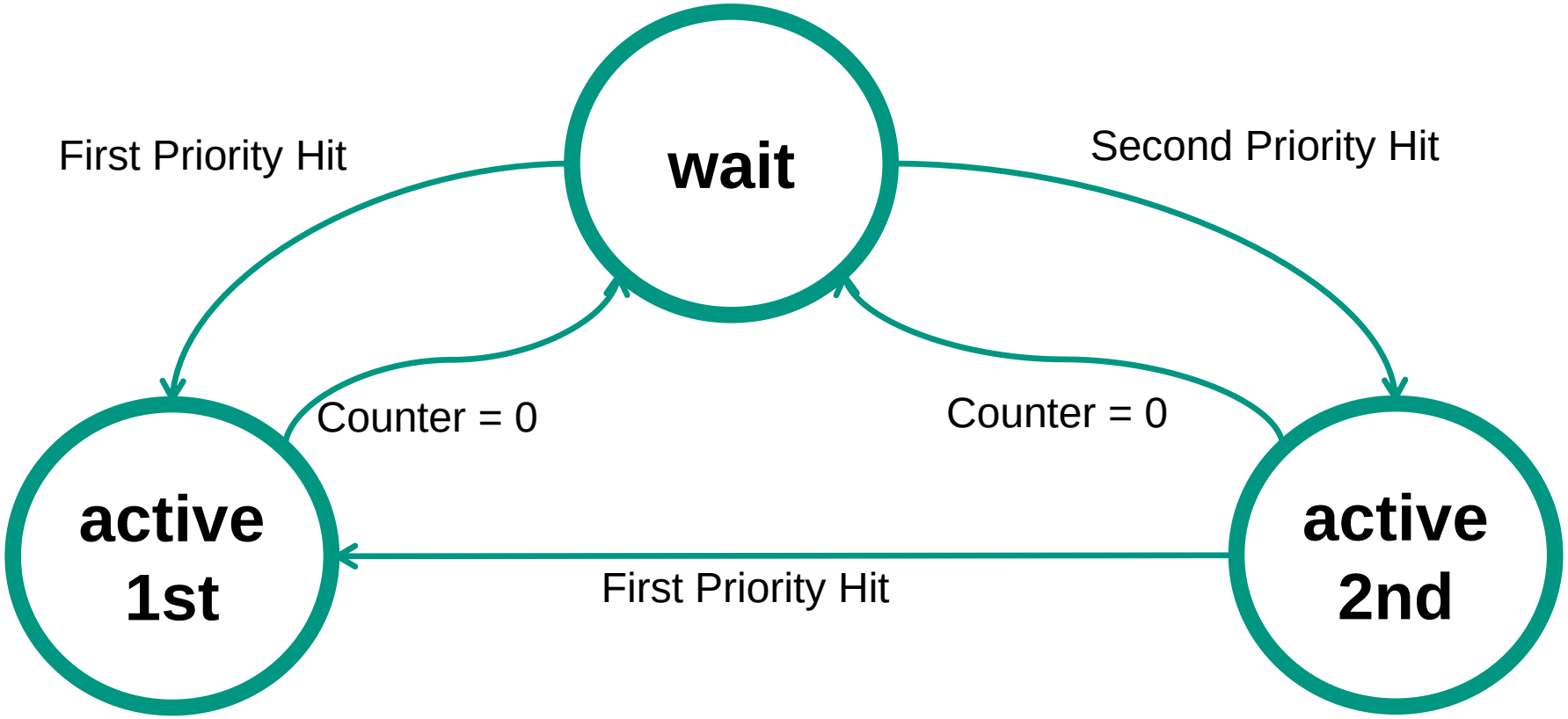

Neighbor Hit Suppression

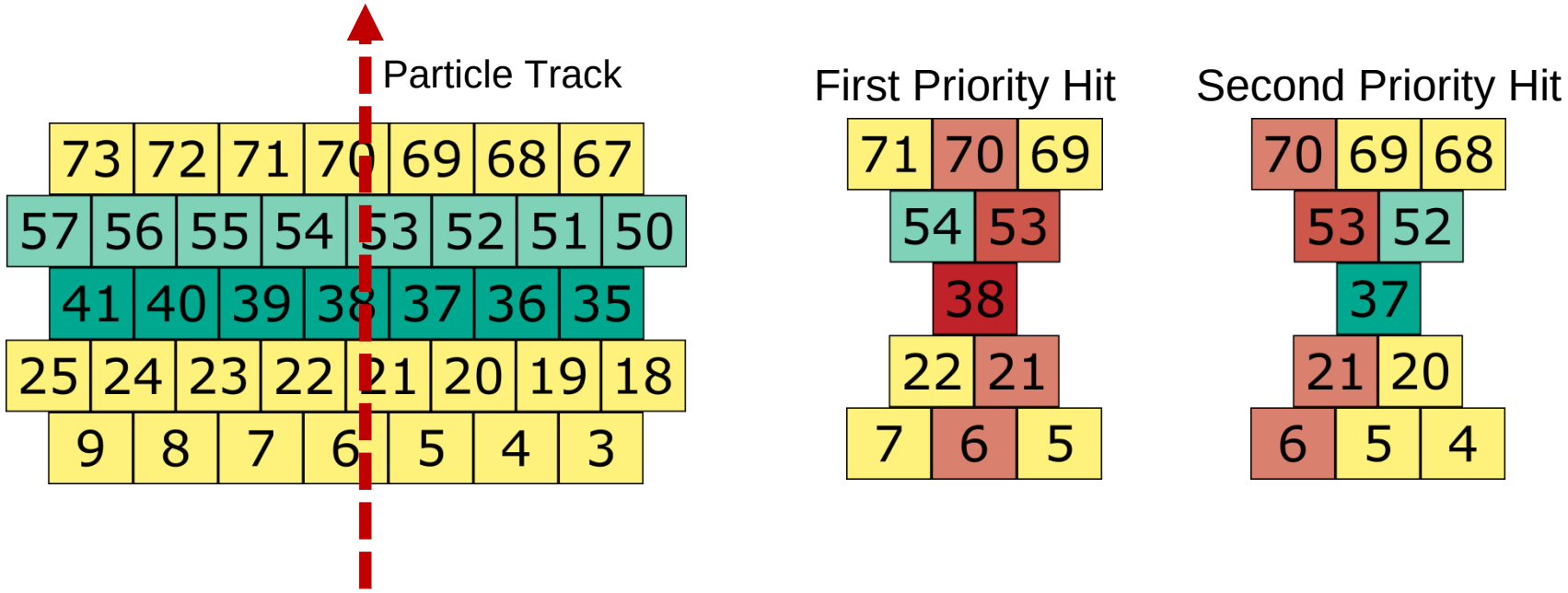

- Sometimes Particle Tracks trigger two Track Segments
  - Redundant information
  - Waist of Bandwidth

Neighbor Hit Suppression

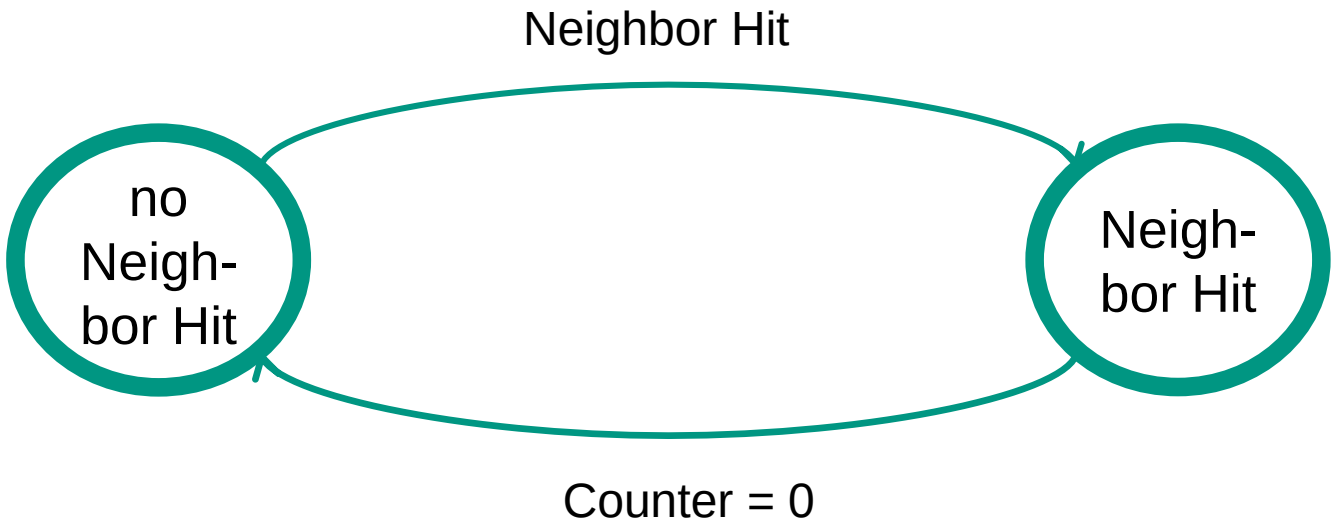

- If active a counter is set with 16 clock cycles (127 MHz ~125 ns)
- First Priority Hits are not affected

IMPLEMENTATION

State Machine

- Implementation in VHDL
- 1 Process State Machine
- Mealy-Automat

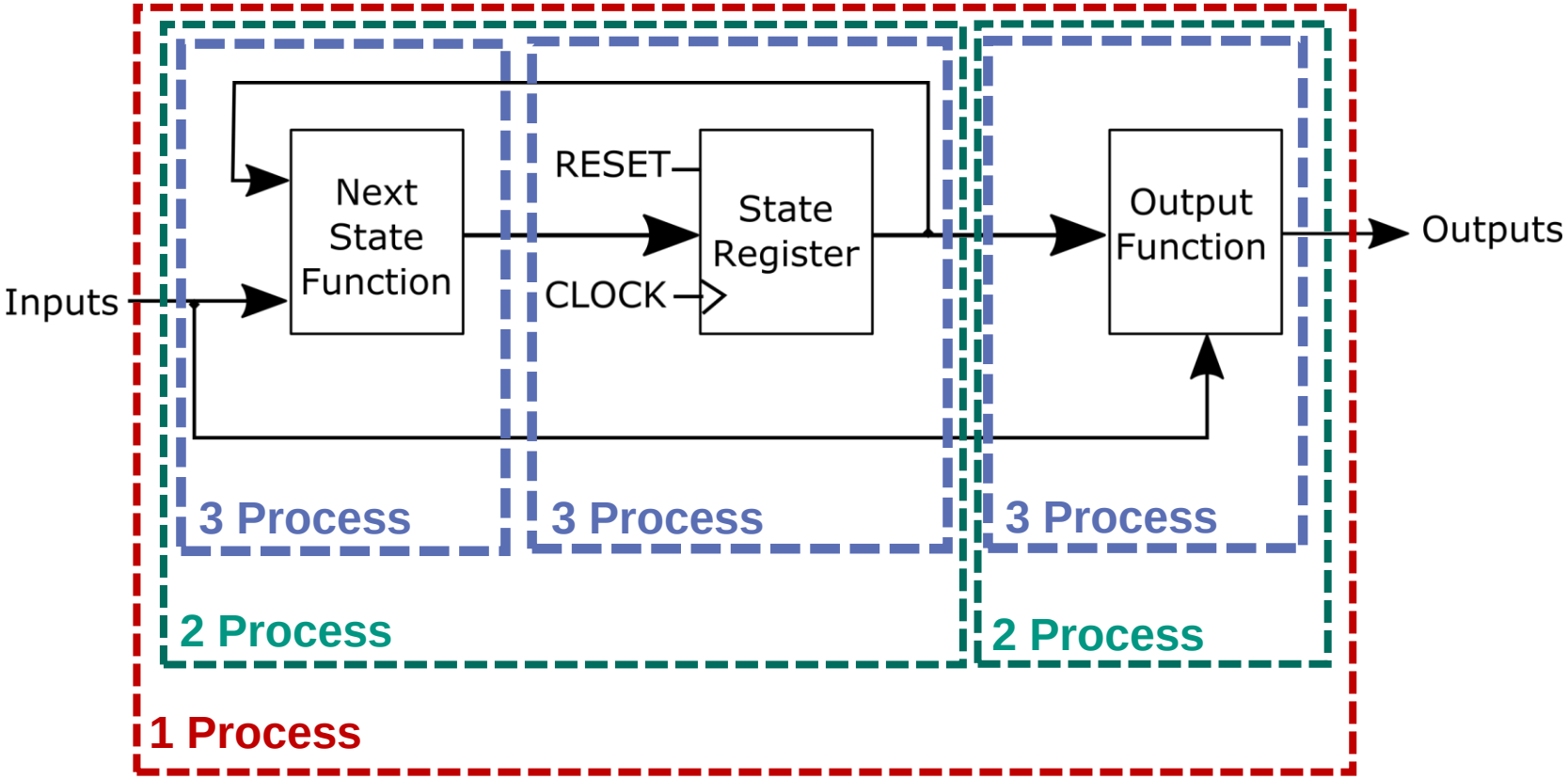

Resources use

Superlayer 8						
	Slice Register		Slice LUTs		LUT-FF	
old	295116	**41%**	223432	**63%**	163883	**57%**
State Machine	214788	**30%**	157066	**44%**	110391	**46%**

- State Machine Version had lower resource use
  - Simpler to implement

Dual Port Bram

- Contains precalculated values for the following trigger systems
  - Calculation in time is to complex
- Each track segment previously had its own BRAM
  - These store the same information
- Now: Neighbouring track segments share a BRAM
  - Both Ports are used now
  - A special handling for defect wire is implemented

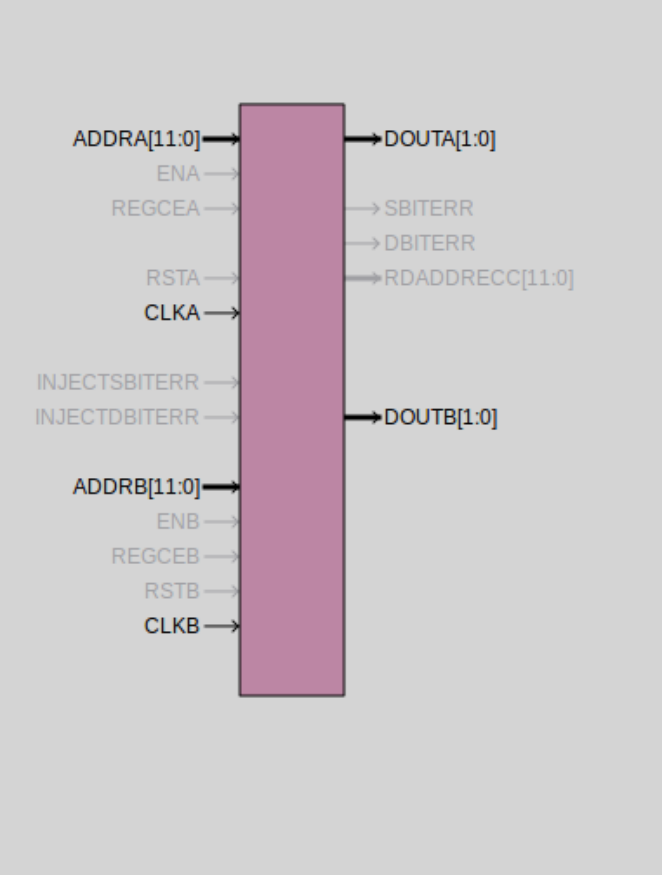

Resources use

Superlayer 8	
BRAM B36E1	
old	430
Dual Port	252

- BRAM use is reduced
  - Simpler to implement

VALIDATION

Test Date generation

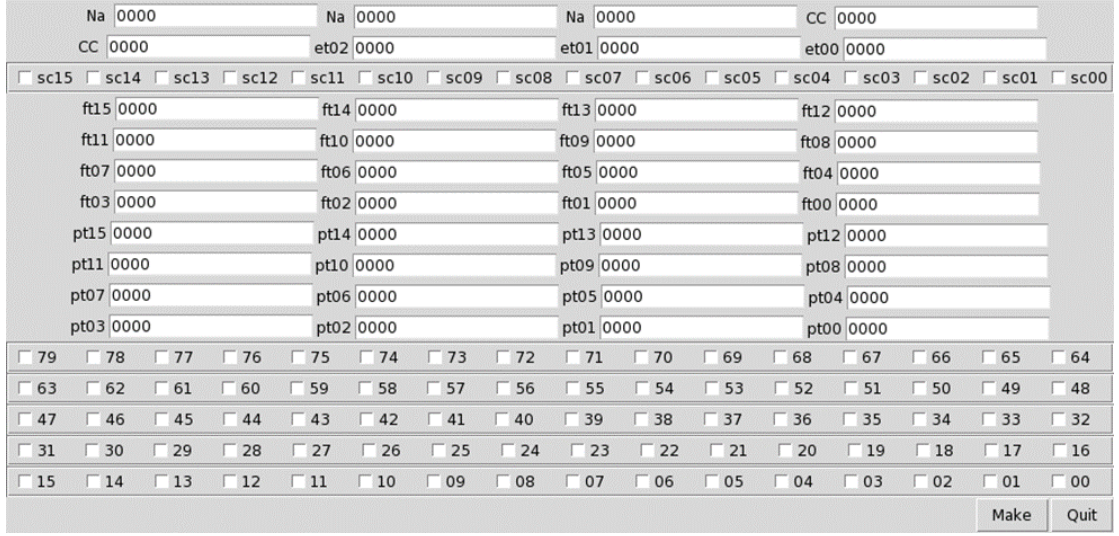

F7	Reserved				N/A	N/A	N/A	N/A	N/A	N/A	N/A	N/A	cc				0xF0
	cc				et02				et01				et00				0xE0
F6	sc15	sc14	sc13	sc12	sc11	sc10	sc09	sc08	sc07	sc06	sc05	sc04	sc03	sc02	sc01	sc00	0xD0
	ft15				ft14				ft13				ft12				0xC0
F5	ft11				ft10				ft09				ft08				0xB0
	ft07				ft06				ft05				ft04				0xA0
F4	ft03				ft02				ft01				ft00				0x90
	pt15				pt14				pt13				pt12				0x80
F3	pt11				pt10				pt09				pt08				0x70
	pt07				pt06				pt05				pt04				0x60
F2	pt03				pt02				pt01				pt00				0x50
	h79	h78	h77	h76	h75	h74	h73	h72	h71	h70	h69	h68	h76	h66	h65	h64	0x40
F1	h63	h62	h61	h60	h59	h58	h57	h56	h55	h54	h53	h52	h51	h50	h49	h48	0x30
	h47	h46	h45	h44	h43	h42	h41	h40	h39	h38	h37	h36	h35	h34	h33	h32	0x20
F0	h31	h30	h29	h28	h27	h26	h25	h24	h23	h22	h21	h20	h19	h18	h17	h16	0x10
	h15	h14	h13	h12	h11	h10	h09	h08	h07	h06	h05	h04	h03	h02	h01	h00	0x00

- Scripts to generate the Belle II CDC Data format fast
- Good to test special cases
- Random data to test statistically

Test Flow

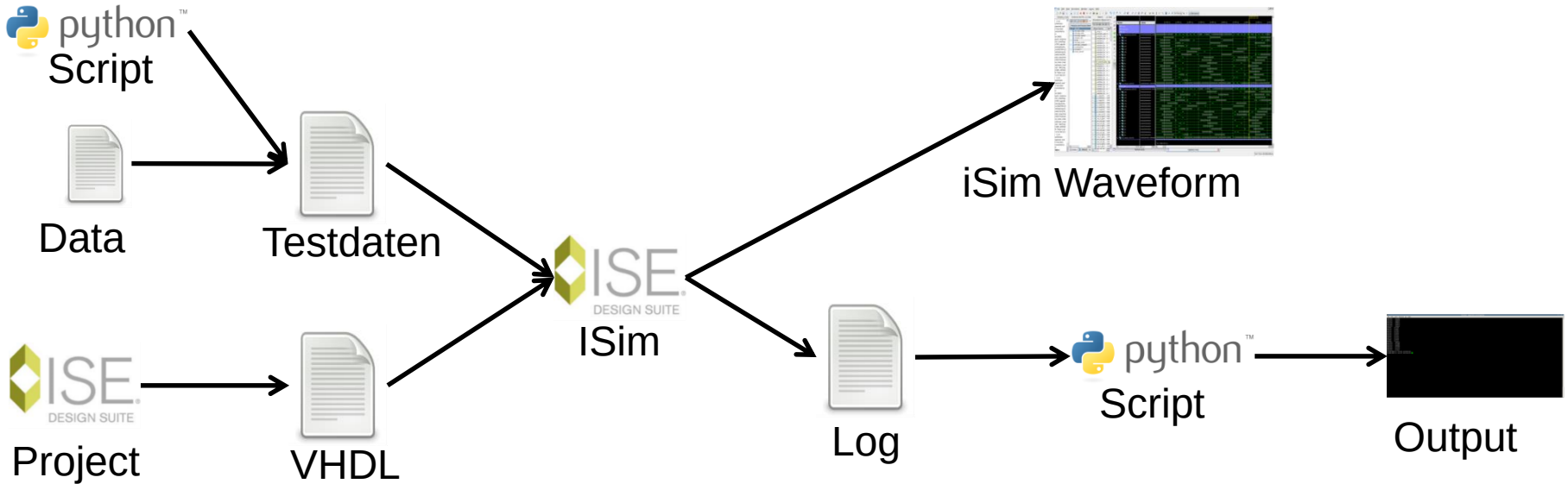

- Tool flow for fast testing
- Scripts to analyses data's

Random Data Analyze

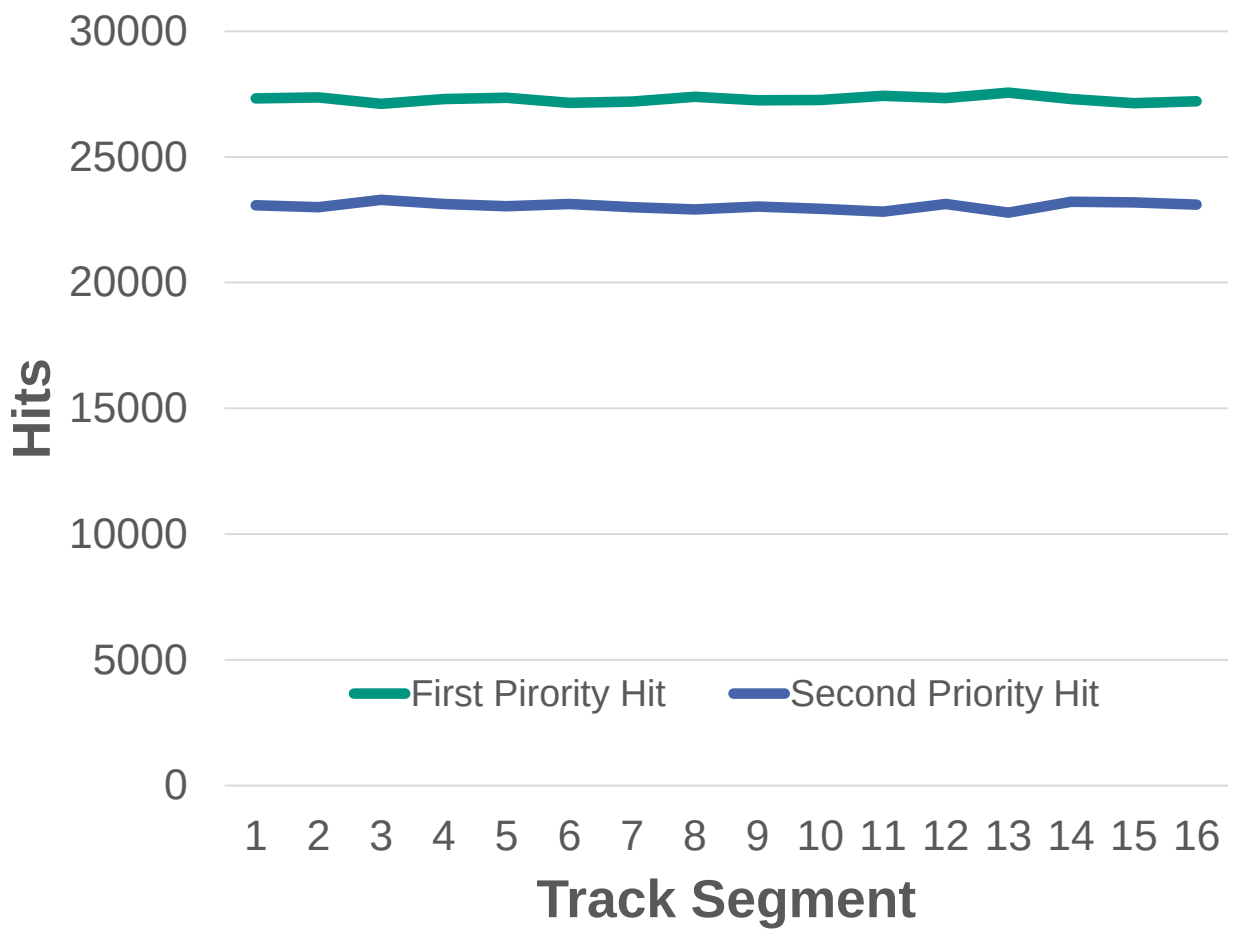

- 1 million random data
- Flat Distribution
- More First Priority Hits than Second Priority Hits

Preliminary Physics Results Phase 3

- Efficiency of Dimuon skim
- Improved by new TSF firmware and bug fix of channel mapping
- Phase 3 new TSF State Machine

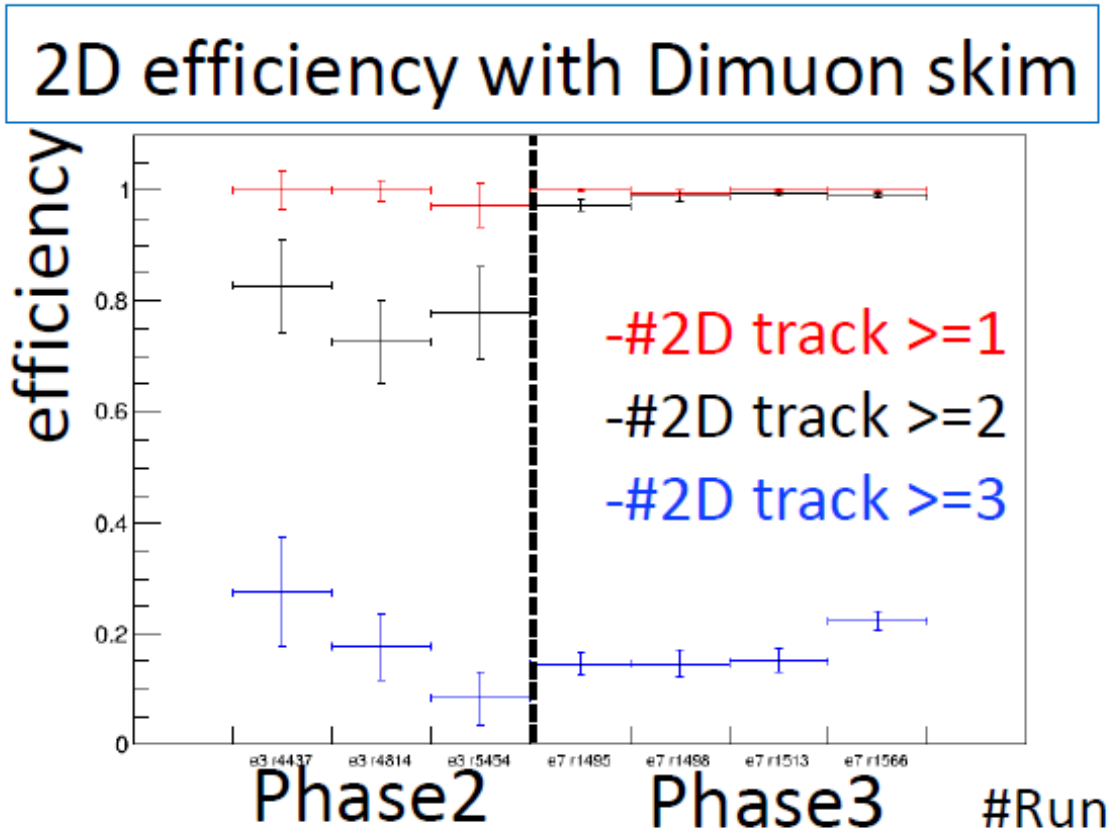

*Koga-sans Trigger Study (presented 33 B2GM) not official result

Preliminary Physics Results Phase 3

- Efficiency of hadronB skim
- ECL Cluster | ECL total energy > 1 GeV
  - Not from CDC!
- 2D track >= 3 | 2D track >= 2 and opening angle > 90 deg | 2D track >= 2 and track 1-5 back-to-back
- 2D track >= 3

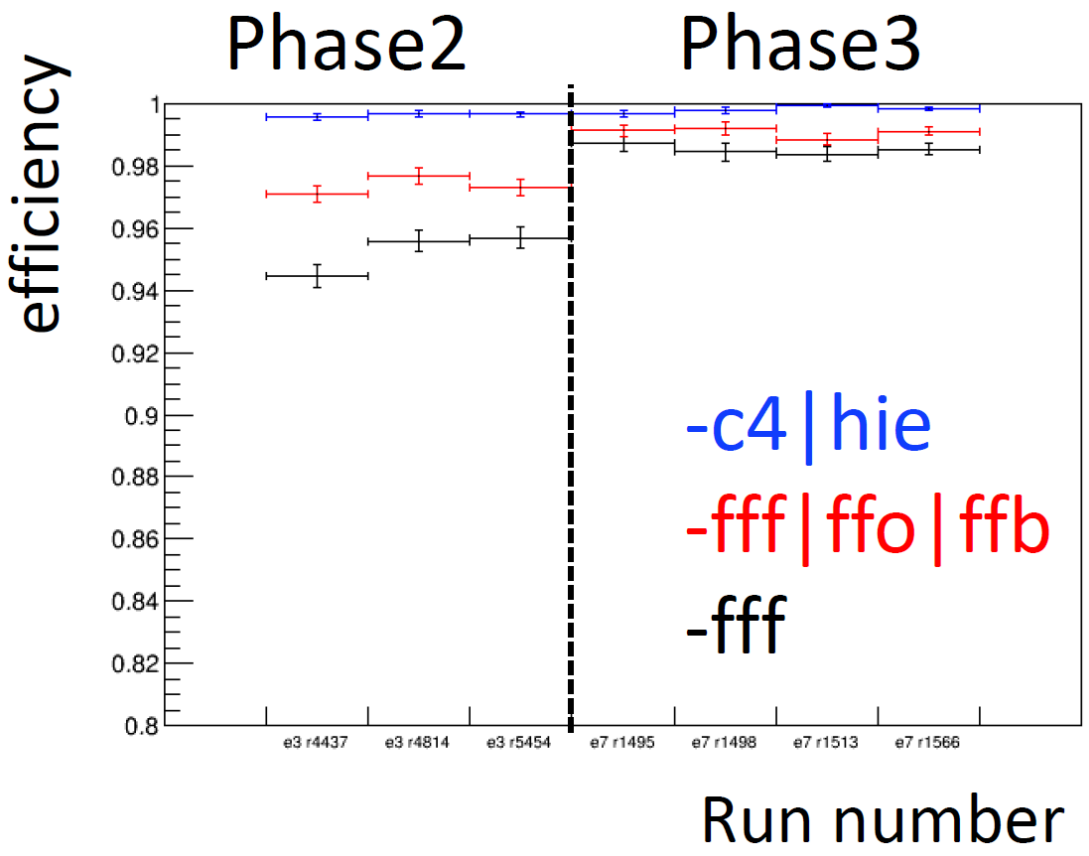

*Koga-sans Trigger Study (presented 33 B2GM) not official result

THANK YOU FOR YOUR ATTENTION.

BACKUP

L/R Information

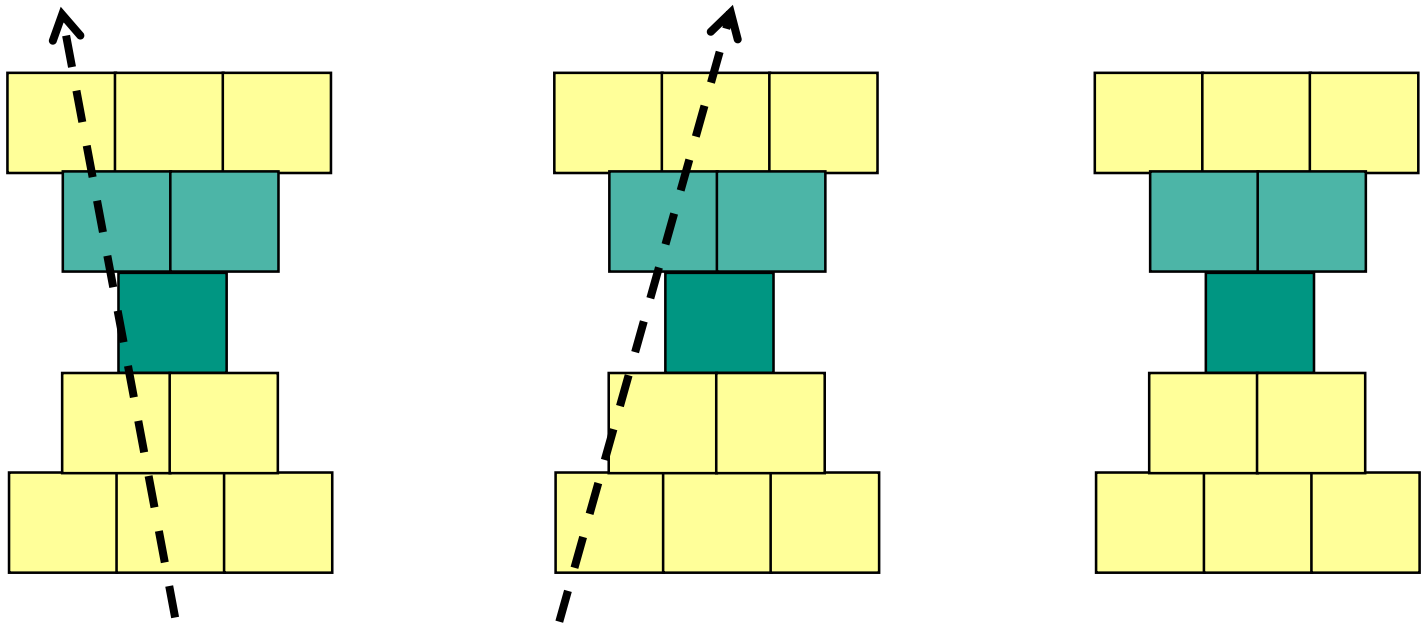

First Priority
Passage left

Second Priority
Passage rigth

Second Priority
Passage unkown

IP:LUT

- Complicated calculation of the passage
- Precalculation already available
- Saved in BROM
- Hits result in address

$$\text{LRresult} = \begin{cases} \text{left: } n_L > \text{p}*(n_L + n_R) + 3\sigma \\ \text{right: } n_R > \text{p}*(n_L + n_R) + 3\sigma \\ \text{un}known \end{cases}$$

$$\sigma = \sqrt{(n_L + n_R) * p * (1 - p)}$$

Dataframe

F7	Reserved				N/A	N/A	N/A	N/A	N/A	N/A	N/A	N/A	cc				0xF0
	cc				et02				et01				et00				0xE0
F6	sc15	sc14	sc13	sc12	sc11	sc10	sc09	sc08	sc07	sc06	sc05	sc04	sc03	sc02	sc01	sc00	0xD0
	ft15				ft14				ft13				ft12				0xC0
F5	ft11				ft10				ft09				ft08				0xB0
	ft07				ft06				ft05				ft04				0xA0
F4	ft03				ft02				ft01				ft00				0x90
	pt15				pt14				pt13				pt12				0x80
F3	pt11				pt10				pt09				pt08				0x70
	pt07				pt06				pt05				pt04				0x60
F2	pt03				pt02				pt01				pt00				0x50
	h79	h78	h77	h76	h75	h74	h73	h72	h71	h70	h69	h68	h76	h66	h65	h64	0x40
F1	h63	h62	h61	h60	h59	h58	h57	h56	h55	h54	h53	h52	h51	h50	h49	h48	0x30
	h47	h46	h45	h44	h43	h42	h41	h40	h39	h38	h37	h36	h35	h34	h33	h32	0x20
F0	h31	h30	h29	h28	h27	h26	h25	h24	h23	h22	h21	h20	h19	h18	h17	h16	0x10
	h15	h14	h13	h12	h11	h10	h09	h08	h07	h06	h05	h04	h03	h02	h01	h00	0x00

- 256 bit data
  - 80 Bit Hit Information
  - 80 Bit Priority Time
  - 80 Bit Fast Time
  - 16 Bit Second Priority
  - 32 Border Information and CC
- 31.75 MHz data rate
- Maximum 24 data frames in parallel