R&D OF THE R, Φ SCANNER MECHANICAL CONSTRUCTION FOR THE SCINTILLATOR DETECTOR BACKGROUND RADIATION MEASUREMENTS

Monika Nadolna, Faculty of Mechatronics of WUT
Martyna Winnik, Faculty of Physics of WUT

Supervisors:
Marek Peryt, WUT, JINR
Maciej Czarnynoga, WUT, JINR

OUTLINE OF TOPICS

- What is the primary goal?
- Assumptions
- Rotation mechanism
- Feed mechanism
- Cable routing
- Final construction
- What's next?
- Conclusions

WHAT IS THE GOAL?

Designing a device enabling the measurement of cosmic ray background in the r, φ coordinate system.

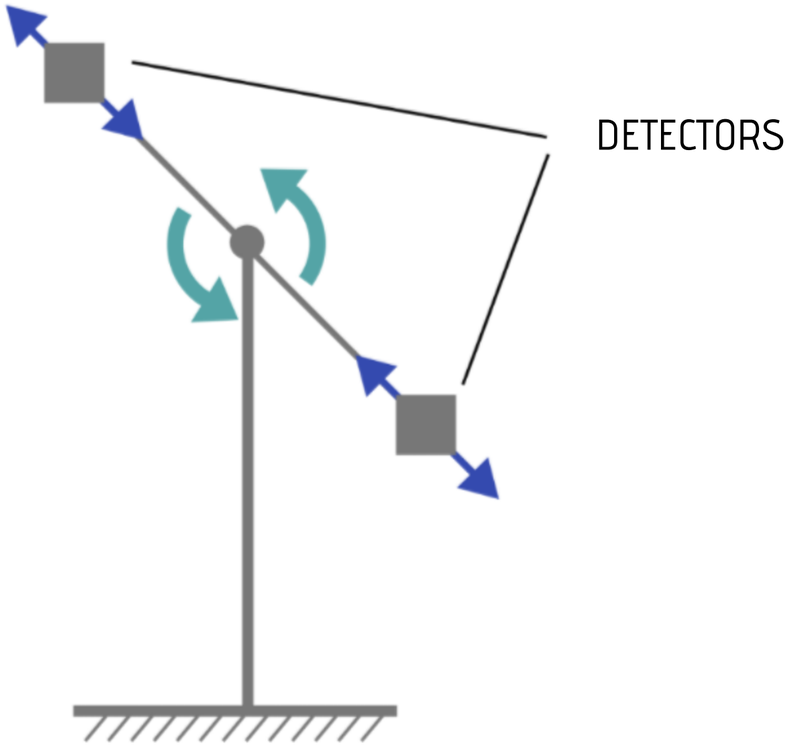

ASSUMPTIONS

(TECHNICAL REQUIREMENTS)

- studying areas up to **1m in length** and **2π angle**
- made mostly in the technology of **aluminum profiles** 20x20 and 20x40
- the use of **mechanical protection** to prevent exceeding the limit positions

ROTATION MECHANISM

- mechanism using a toothed belt
- the large gear has 80 teeth and the small one has 20
- gear ratio 1/4

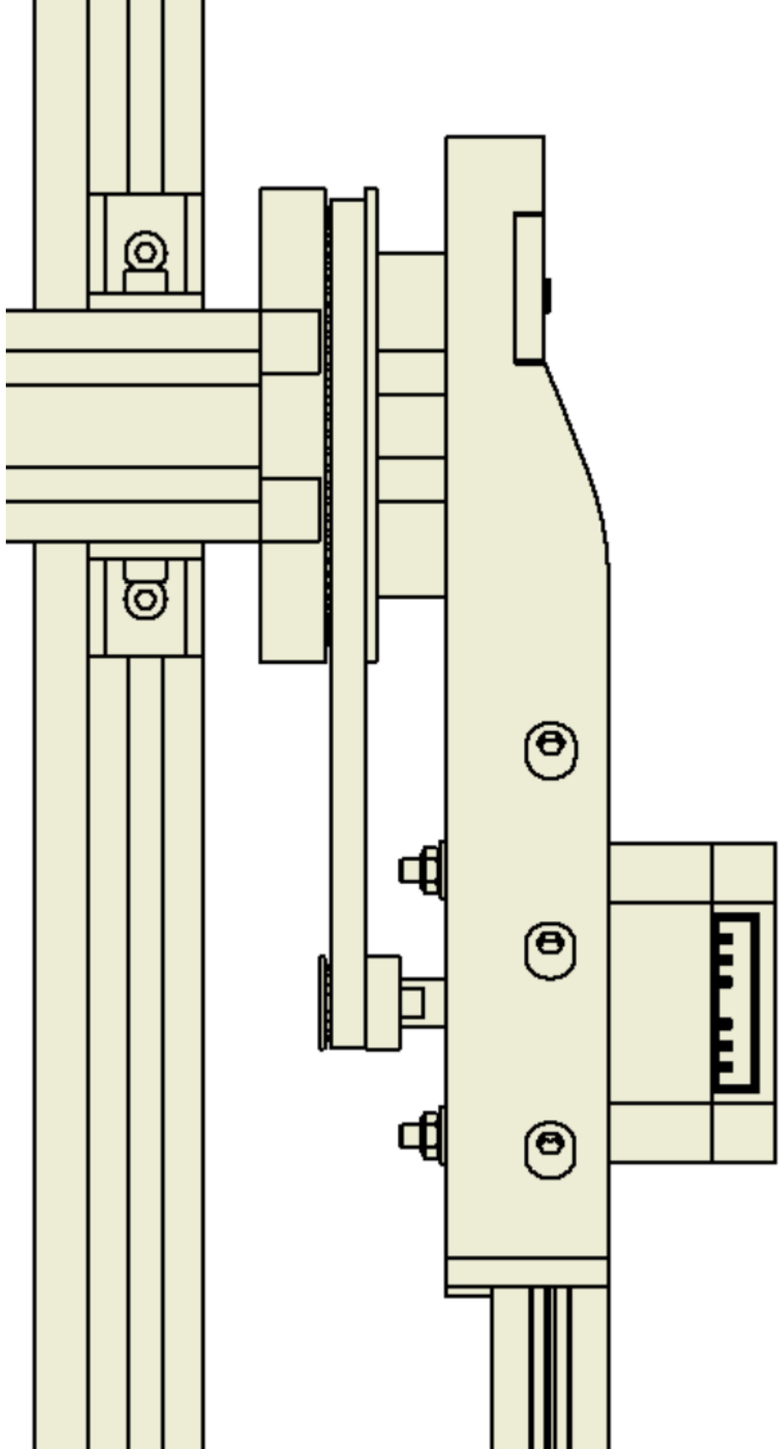

ROTATION MECHANISM

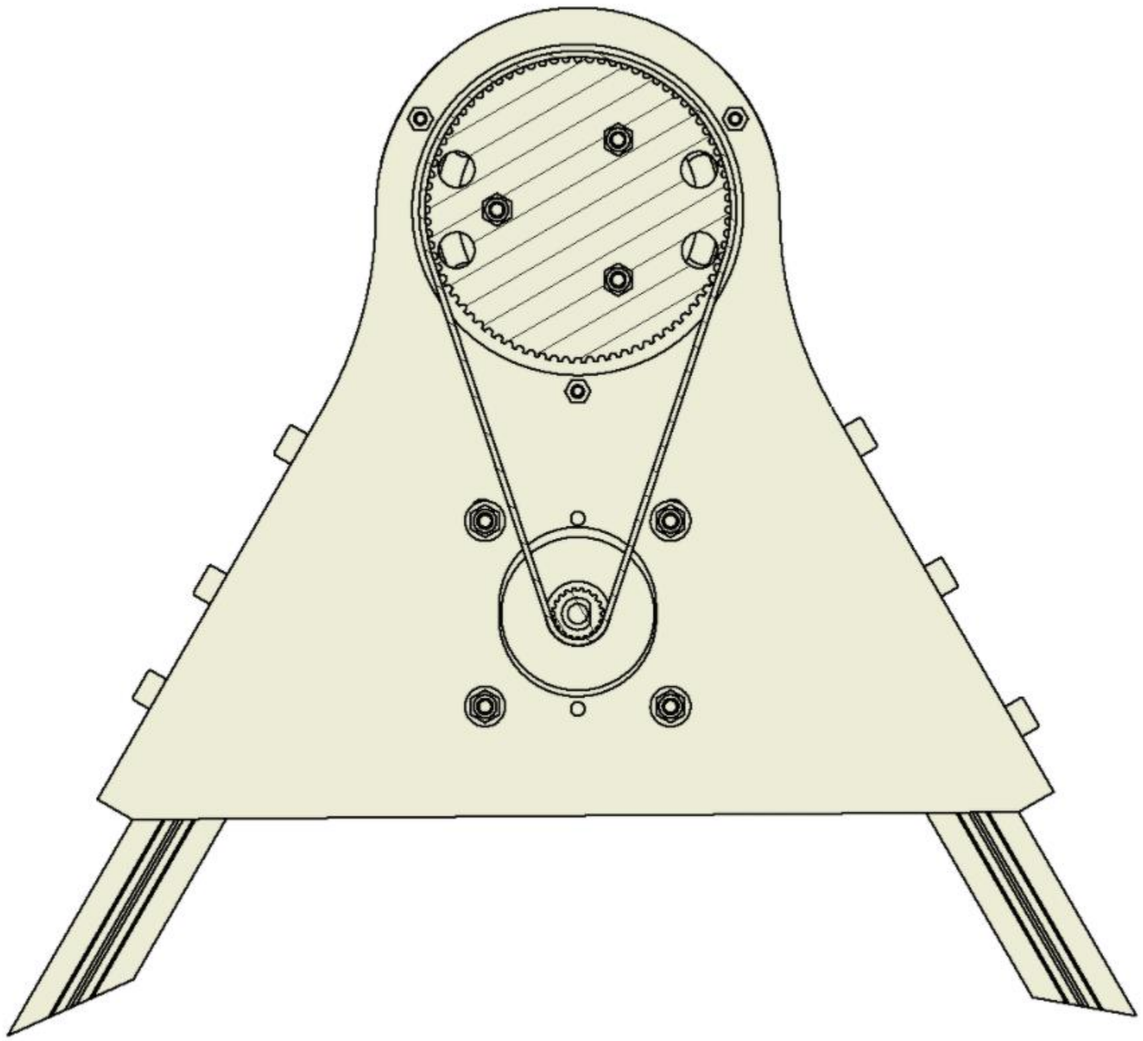

ROTATION MECHANISM

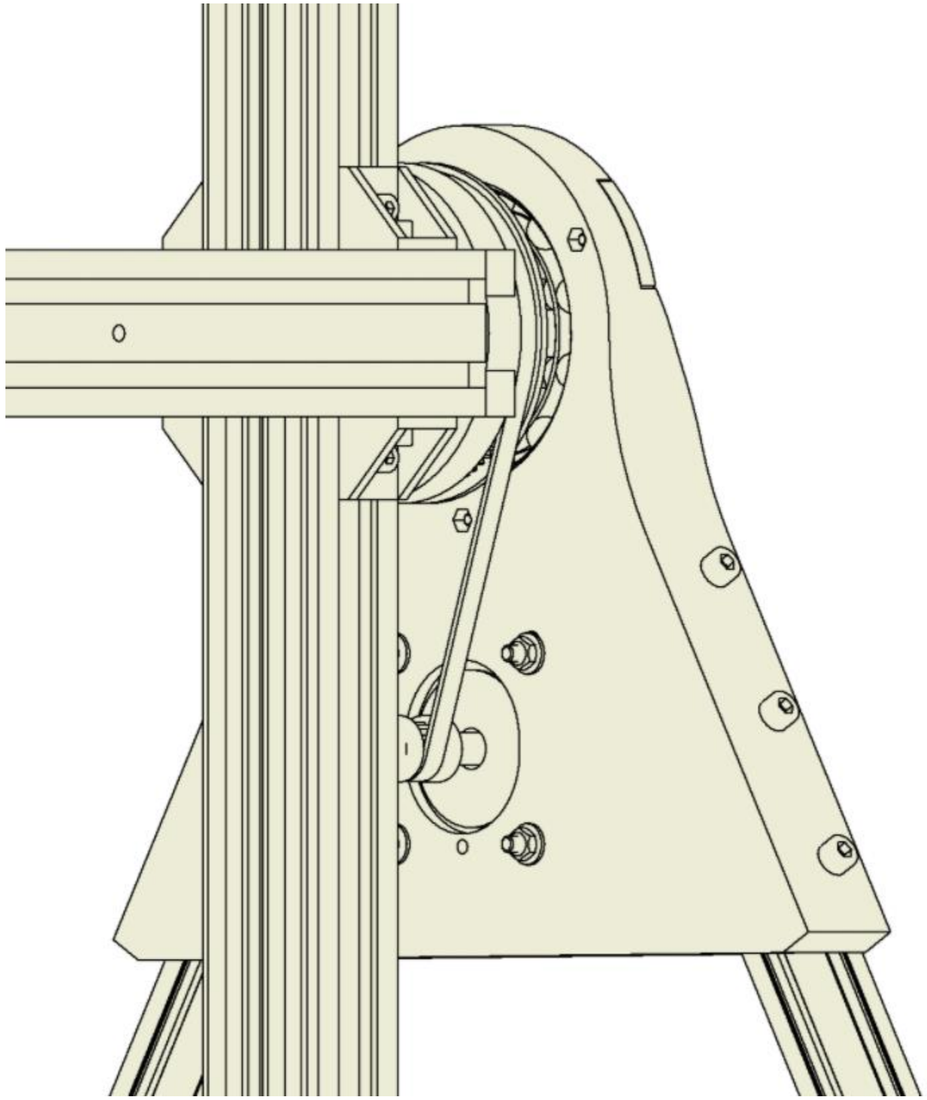

FEED MECHANISM

- mechanism used in 3D printers
- two stepper motors

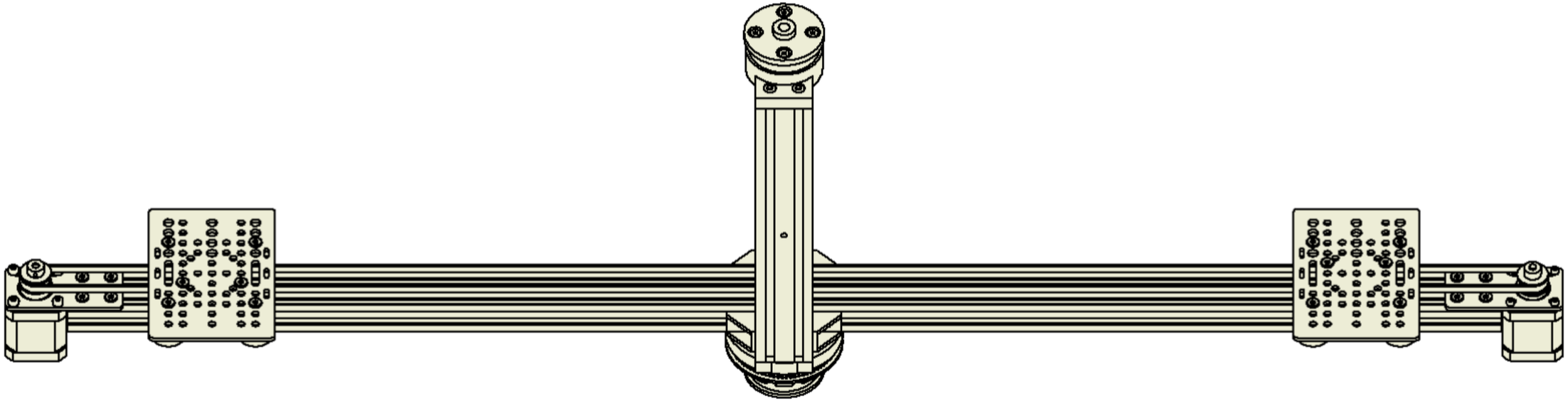

FEED MECHANISM

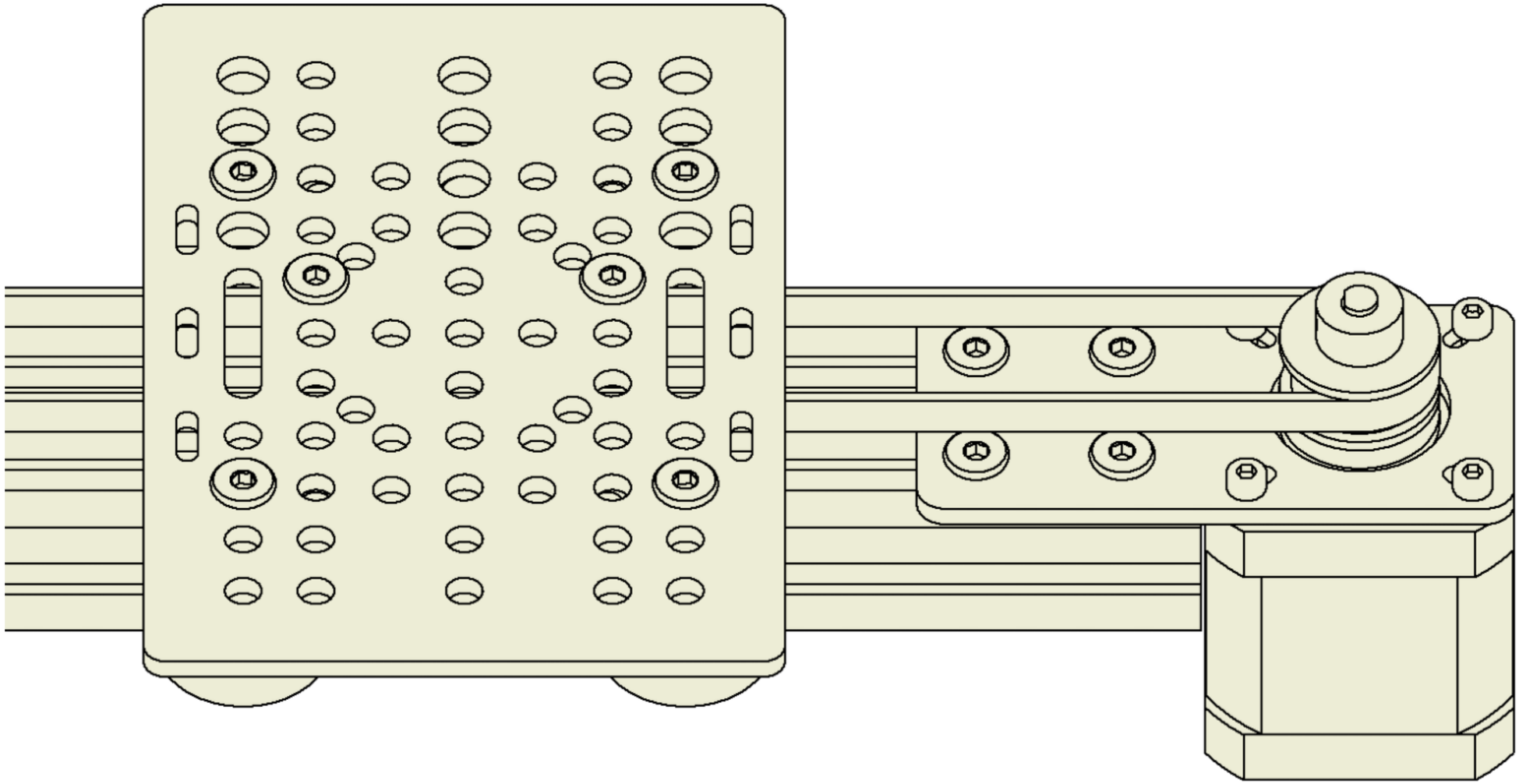

FEED MECHANISM

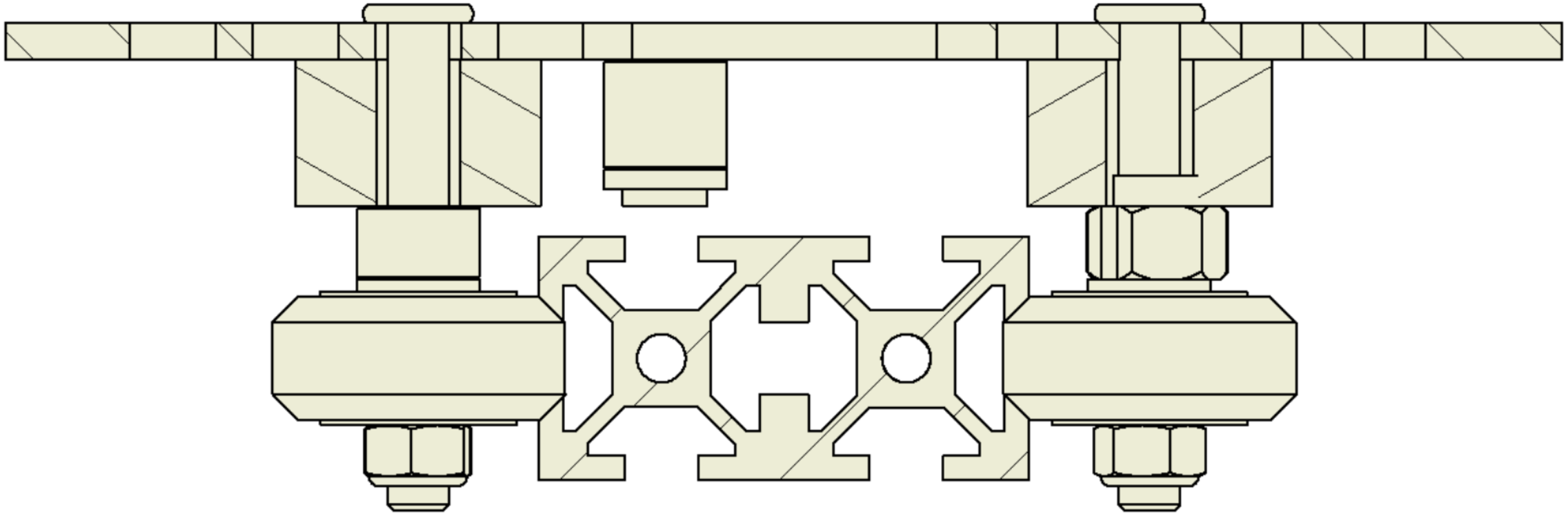

CABLE ROUTING

- rotor stator
- infinite number of turns of the guide

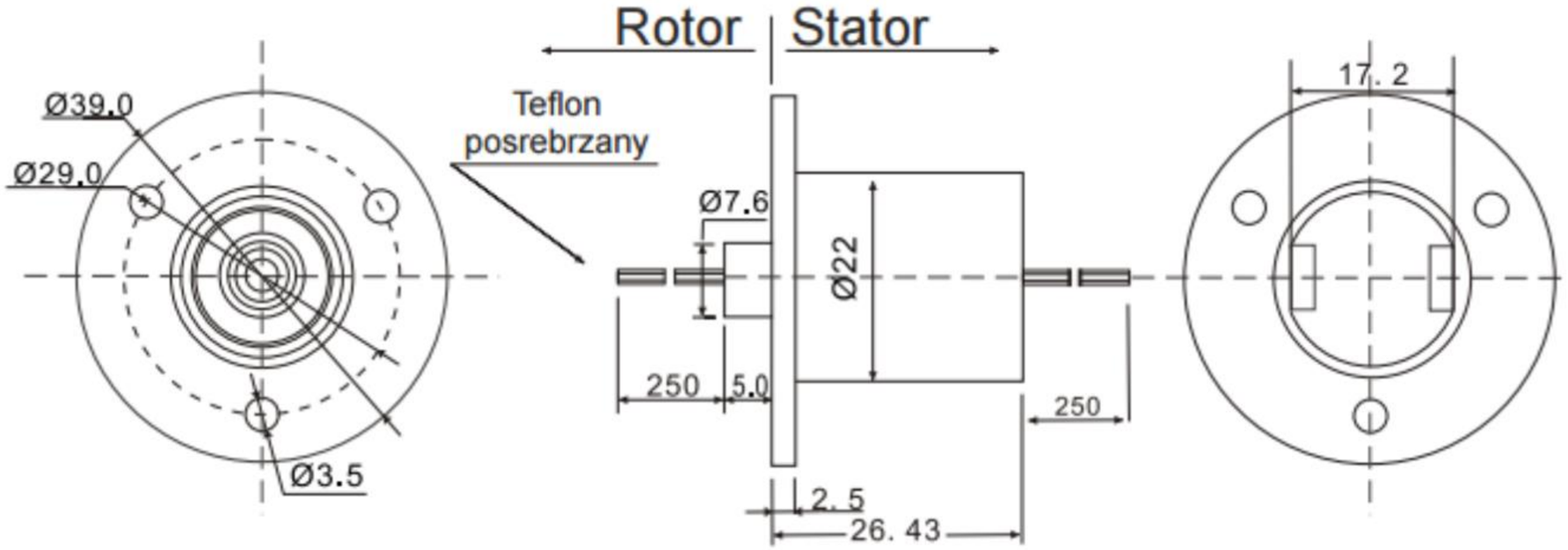

ebmia.pl/caches/images/rysunki_techniczne/kyc12f_tech.png

FINAL CONSTRUCTION

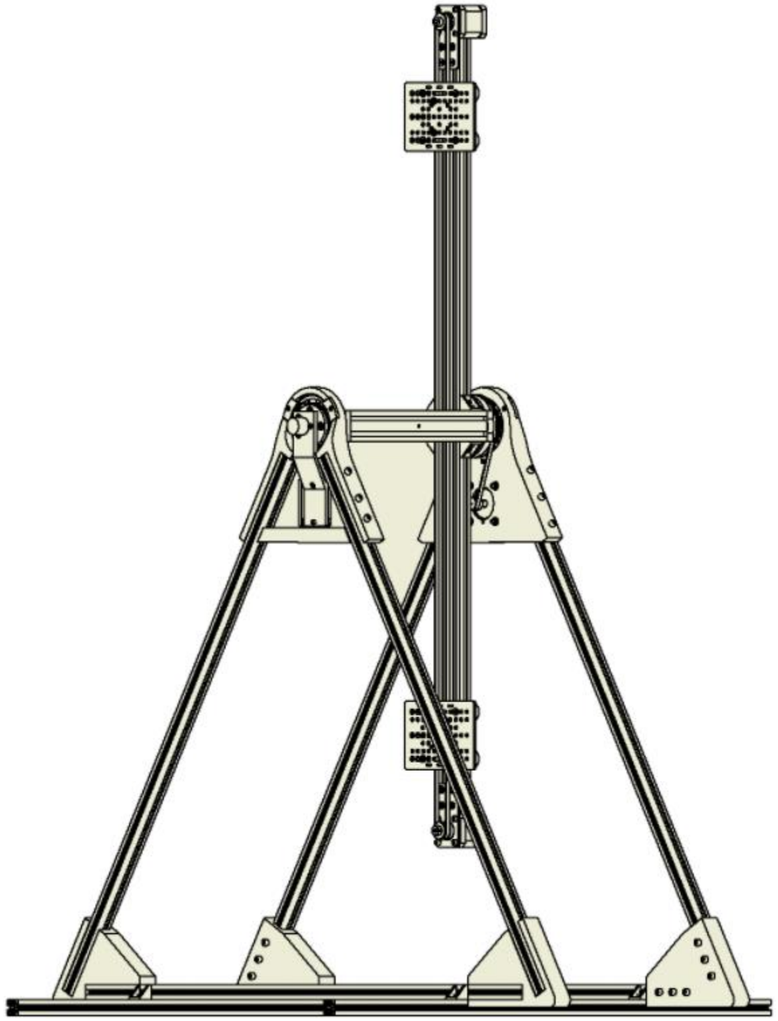

FINAL CONSTRUCTION

FINAL CONSTRUCTION

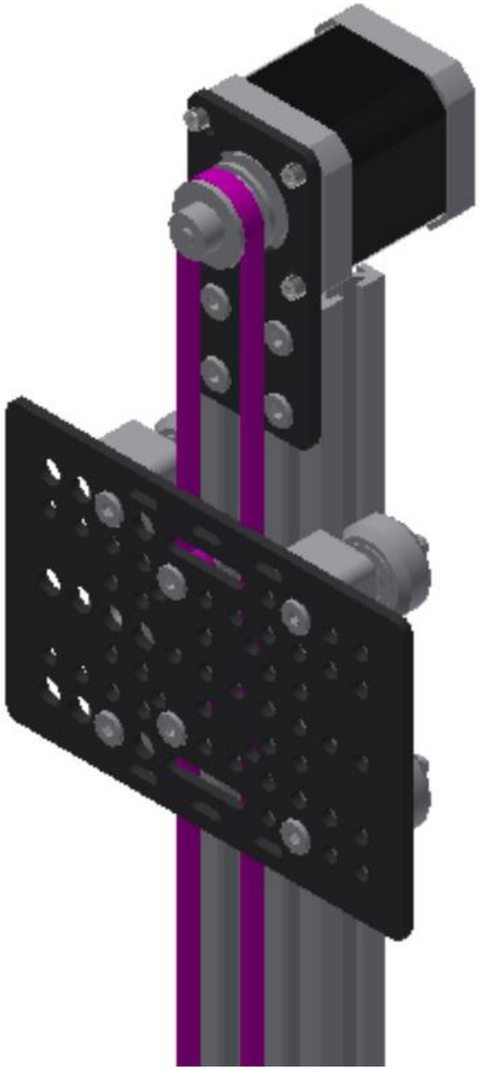

WHAT IS NEXT?

After auspicious prototype tests and meeting the primary assumptions, the final device is assumed to examine the expanse up to **3m in length** and **2π angle**.

The next stages of the project will be:

- manual preparation of the measuring device
- software development
- real cosmic ray measurements performance

CONCLUSIONS

- adaptatability to various applications
- use of trivial construction solutions reduces susceptibility to potential complications and mechanical damagethe
- use of elements obtained thanks to 3D printing reduces production costs

THANK YOU FOR THE ATTENTION

Monika Nadolna, Faculty of Mechatronics of WUT
Martyna Winnik, Faculty of Physics of WUT

Supervisors:
Marek Peryt, WUT, JINR
Maciej Czarnynoga, WUT, JINR