Status of the MPD project

Viacheslav Golovatyuk
(JINR)

MPD 1st stage

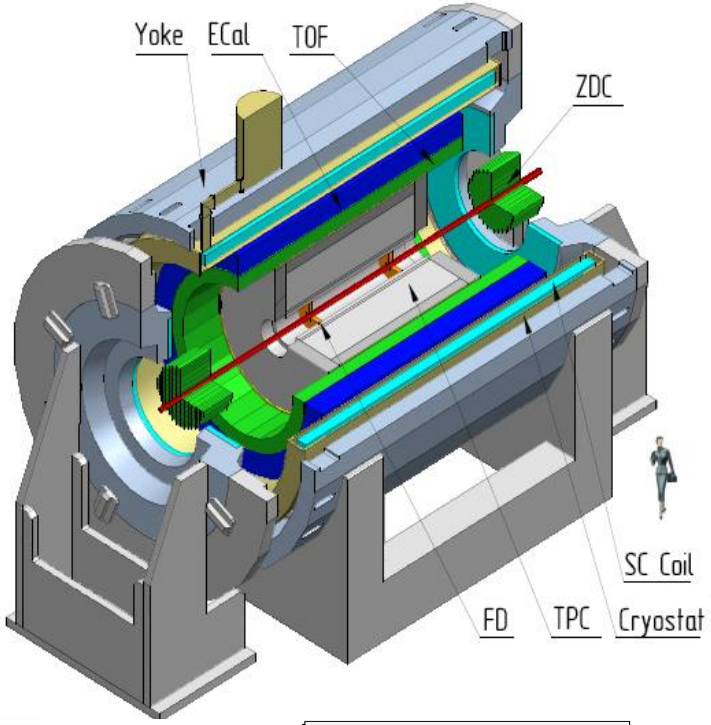

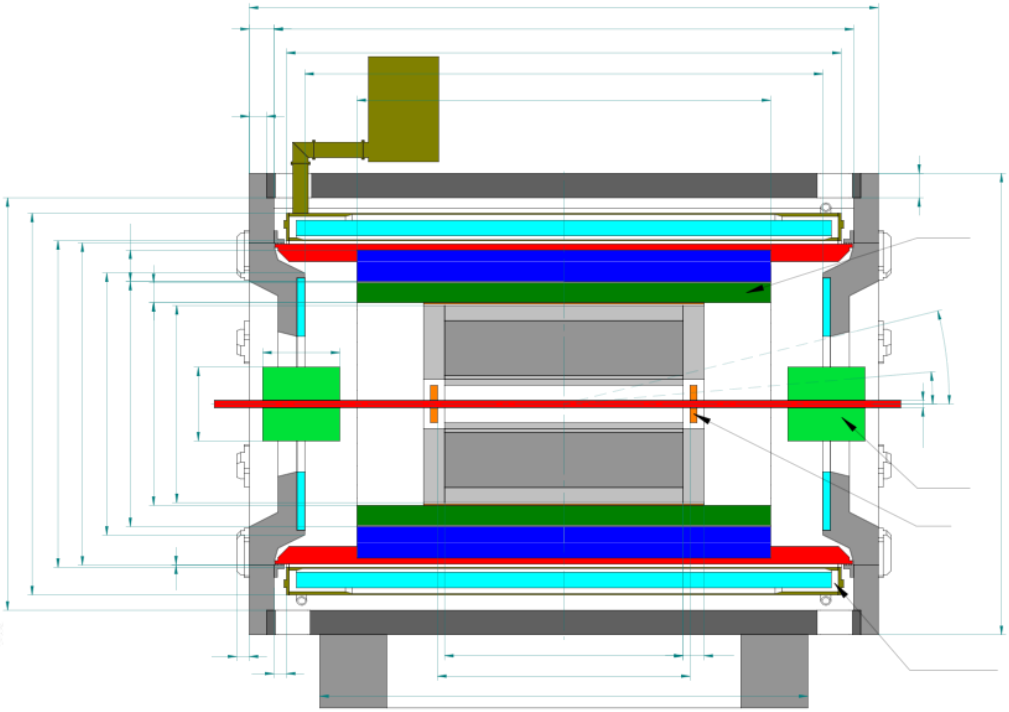

- 2π acceptance in azimuth
- 3-D tracking (TPC)
- Powerful PID (TPC, TOF)
  - π/K up to 1.5 GeV/c,
  - K/p up to 3 GeV/c,
- Low material budget
- High event rate (up to ~ 6 kHz)

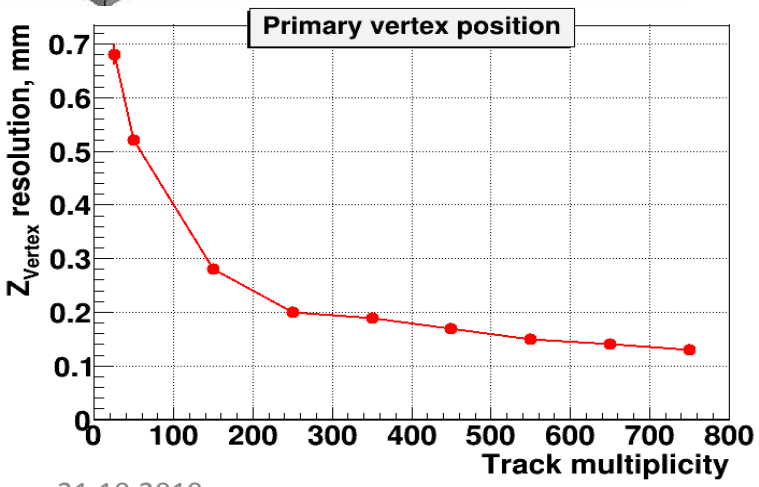

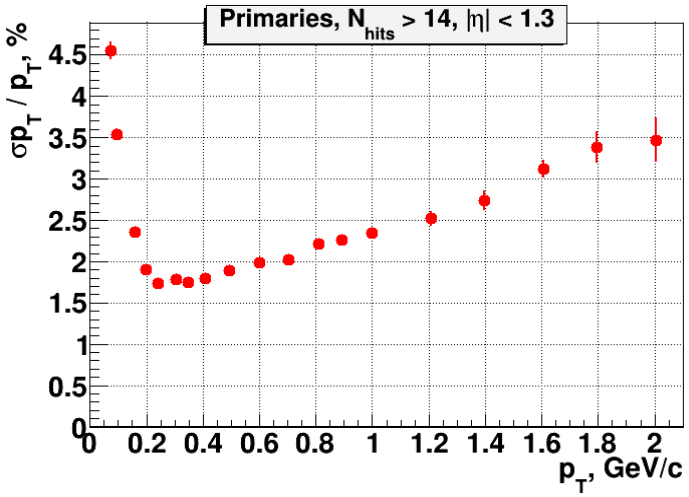

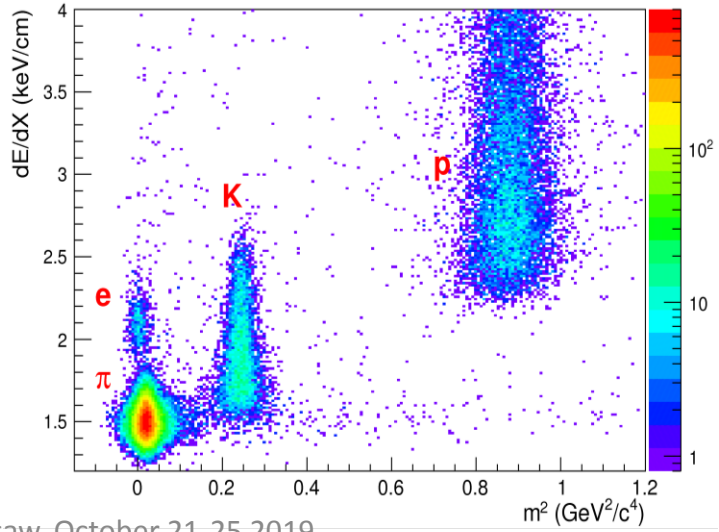

MPD barrel with two Platforms

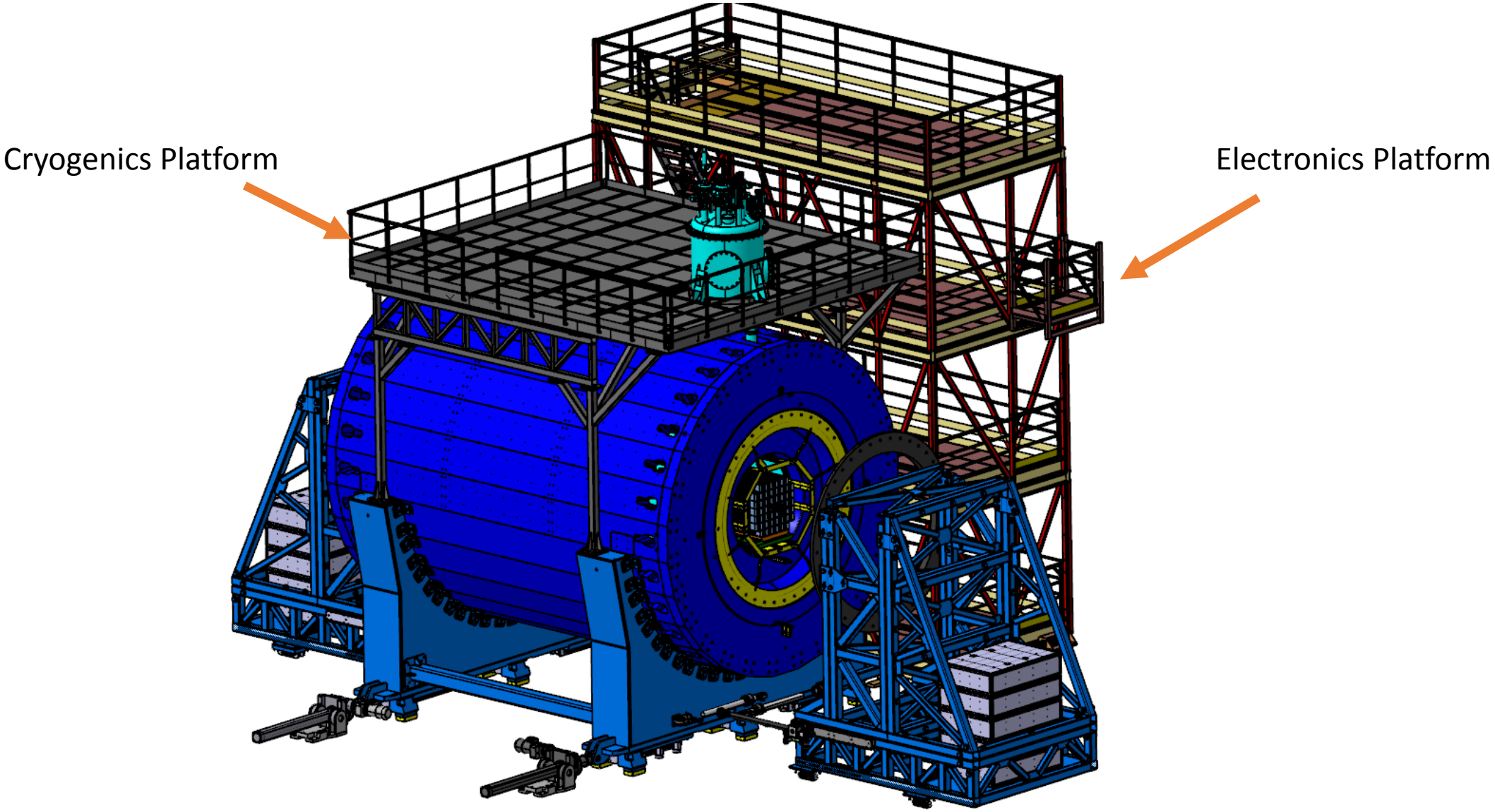

Milestones for the next year

1. Subdetectors assembling and testing
2. TPC assembling and installation
3. Solenoid installation and switching on
4. Magnetic Field measurements
5. Support Frame production and installation
6. Electronics cooling system
7. Electronics Platform
8. Beam pipe - high vacuum (10^{-10} torr)

Magnet fabrication: *ASG (Genova) & Vitkovice HM*

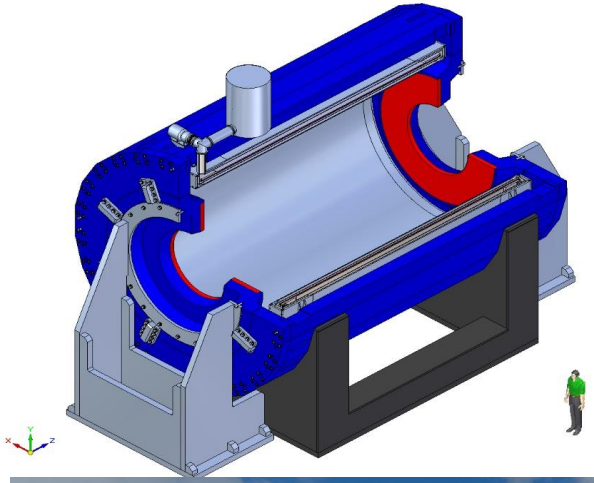

Before to transport Solenoid to JINR a low temperature checks with a liquid nitrogen has to be performed

Solenoid assembling

All elements of Magnet Yoke are at JINR

yoke control assembly at HM Vitkovice

Mapper for Magnetic Field measurements

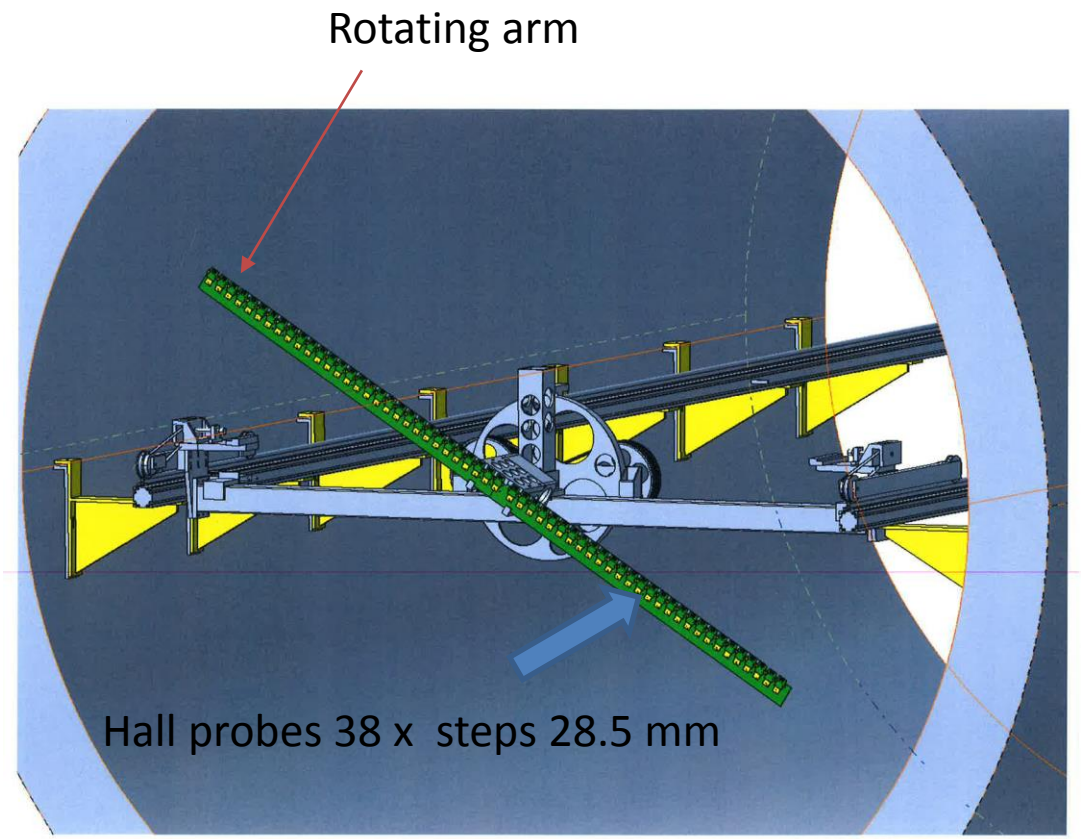

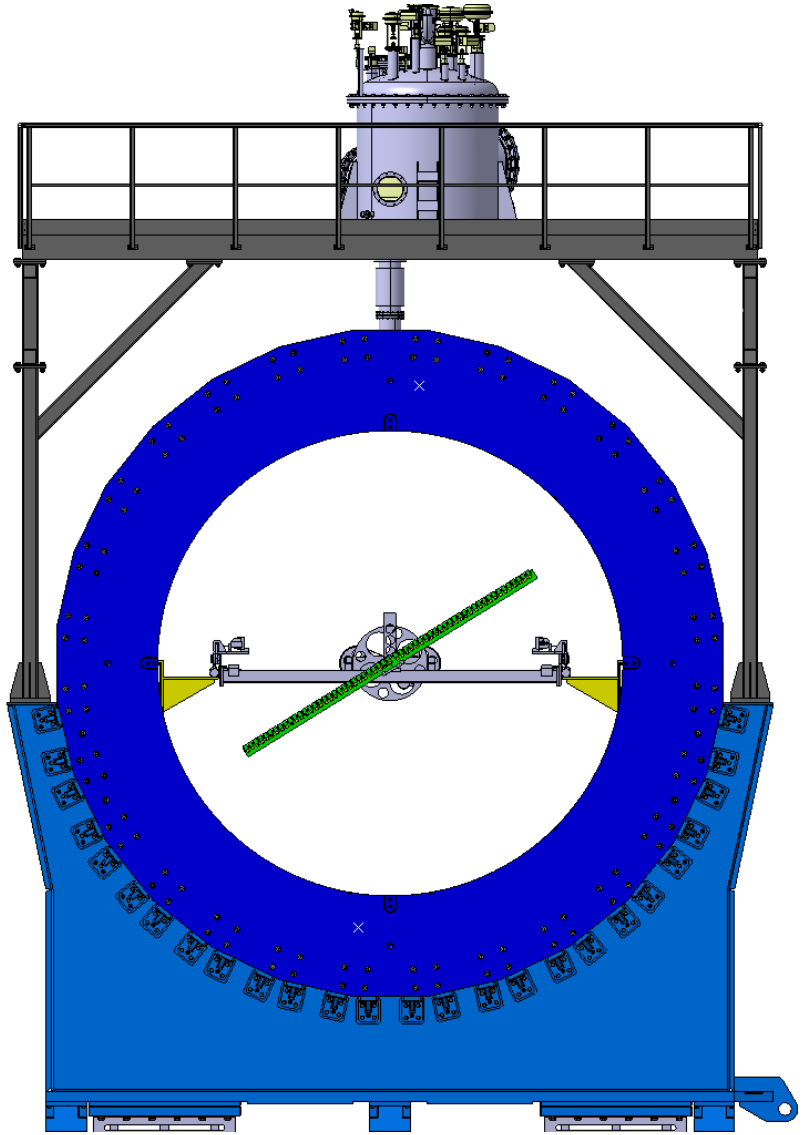

$$\left|\frac{B_r}{B_z}\right| = 5.2\times10^{-4}$$

$$\int_{-1700}^{1700} \frac{B_r}{B_z}\,dz \le 1{,}5mm$$

MPD Dubna
Alignment of Magnetic Field Measurement Bench in B164 (CERN)

Measurement date: 15.05.2019

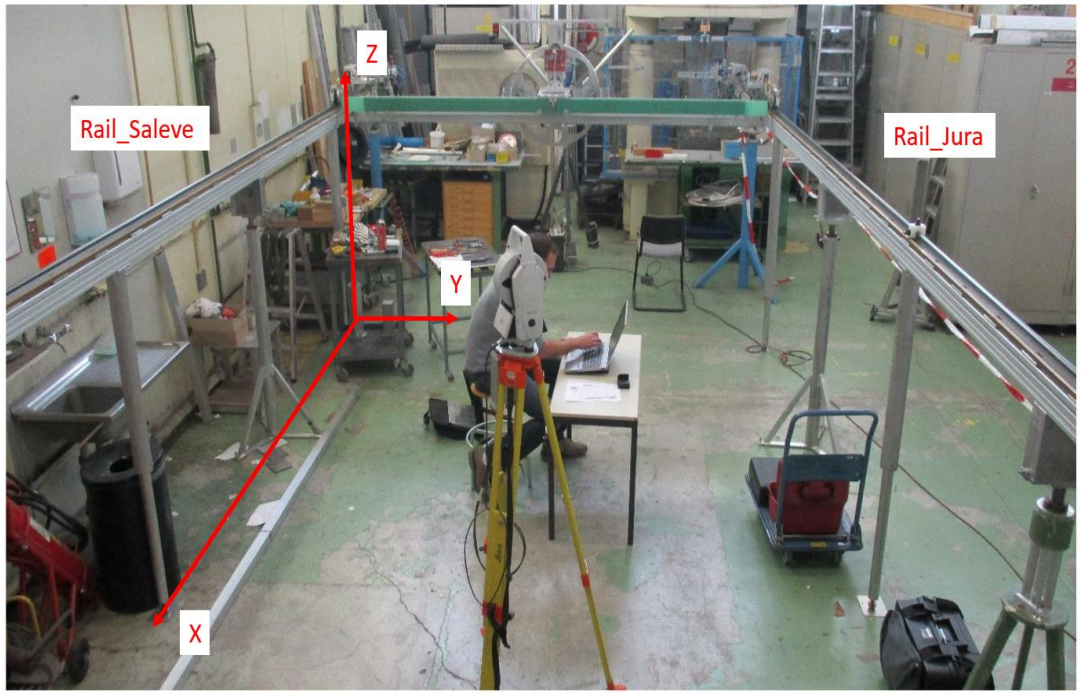

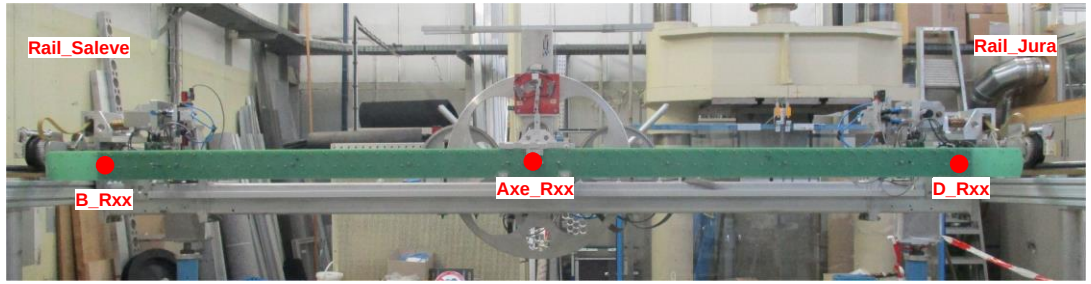

MPD Time Projection Chamber

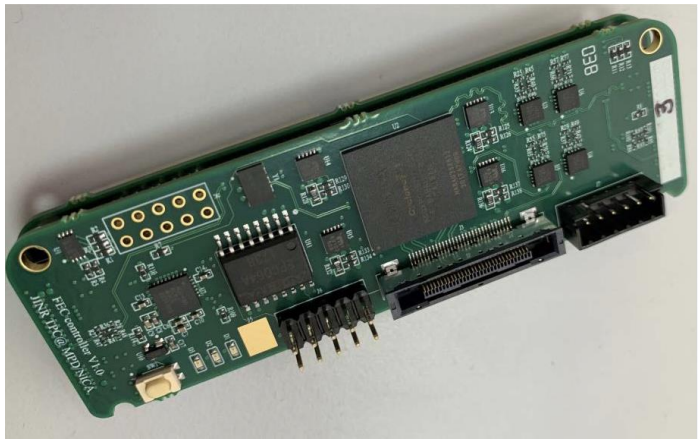

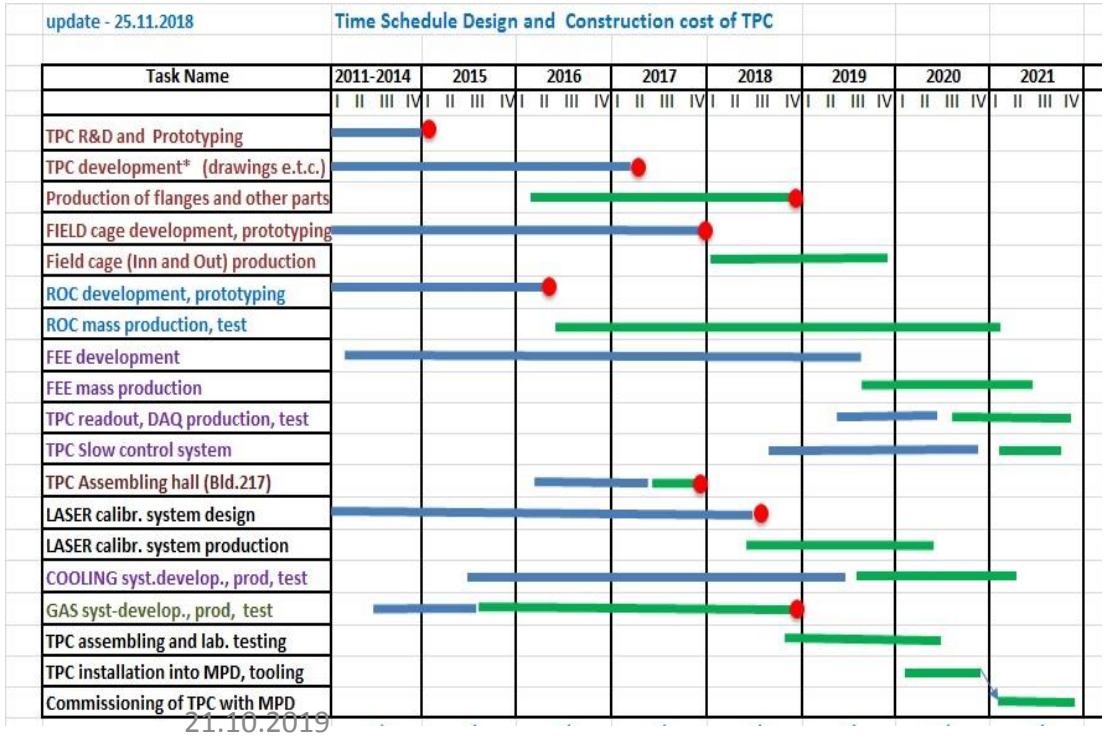

item	Date
Testing FEC v1.0 finished	Feb. 2019
Receive SAMPA V4 chips at Dubna 4500 (all)	June 2019
32 preproduction vervion 2.1 FE Card assembled (1/2ROC)	Jul. 2019
Testing of half ROC equipped with FE Cards	Aug. – Dec.2019
Production FE Cards for 1 ROC and Testing	Dec. 2019-Apr. 2020
Instrumentation and test ROC 2, 3, 4	May 2020
Production FE Cards for the first 10 ROCs (Total 14)	July 2020
Production FE Cards for the second 10 ROCs (Total 24)	August 2020

Cooling system for TPC

Total power P ~ 10 kW
System type – low pressure (NO water leak)
Water in: T=18 degree, expected water out: T=(25-27) degree
Water flow=(40÷60)m3/h -> up to 1 m3/min
N of controlled cooling channels – about N=72pc
Requirements for TPC gas volume temperature stabilization:
T=(To +/- 0.25) degree

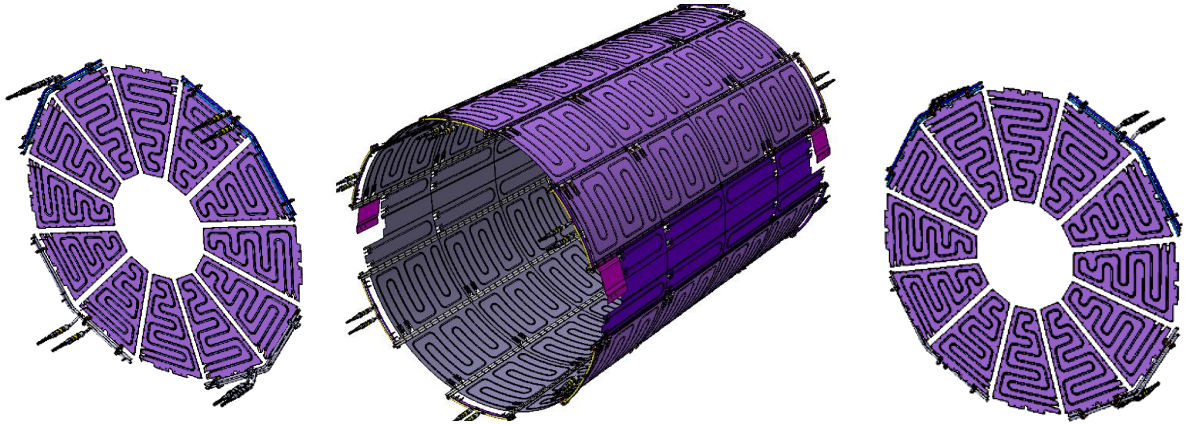

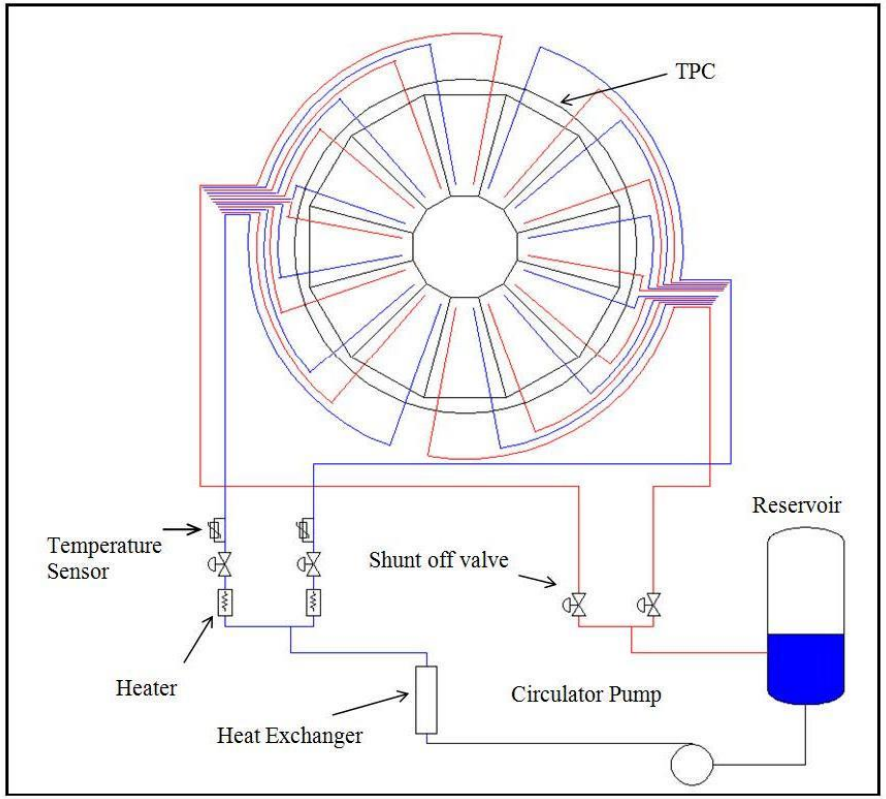

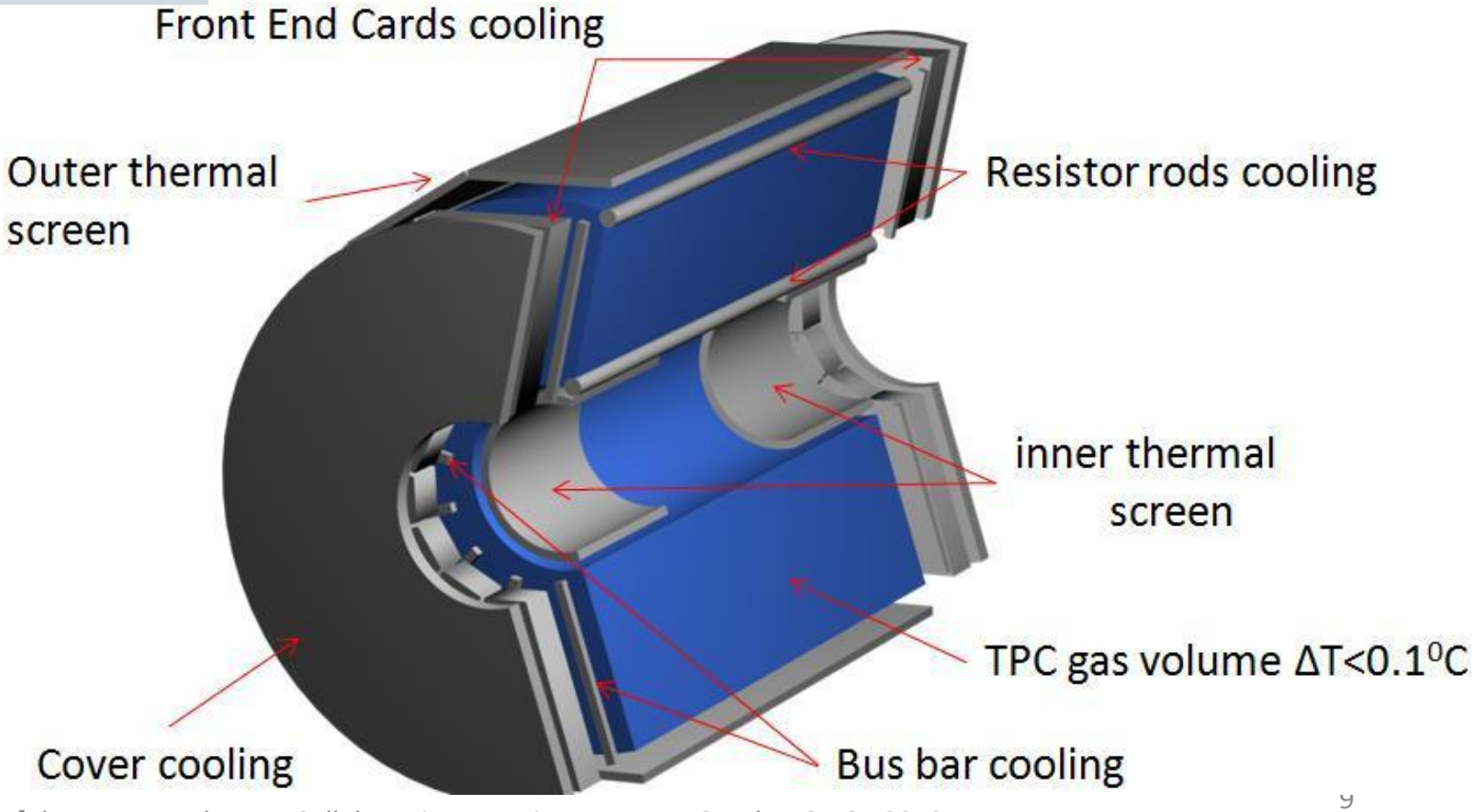

MPD TOF

Ultrasonic wave glass cleaning

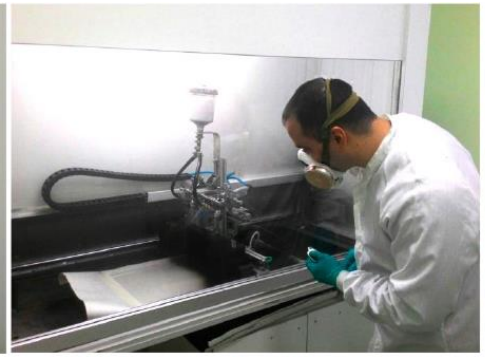

Painting of the HV conductive layer

MRPC assembling

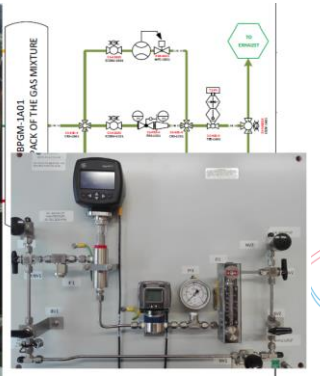

Dimensions of sensitive area
600 x300 mm^2

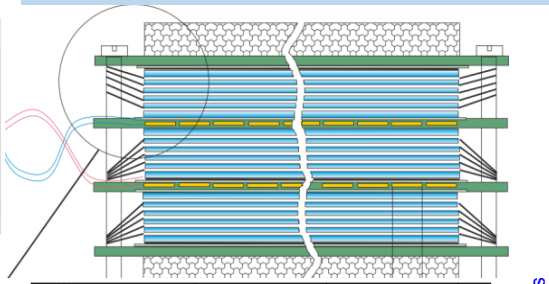

Optical quality control

Cables and connectors soldering

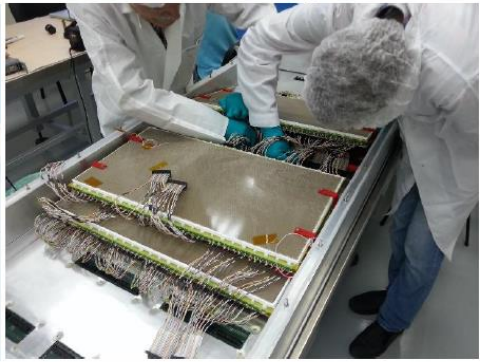

Detectors installation to the TOF box

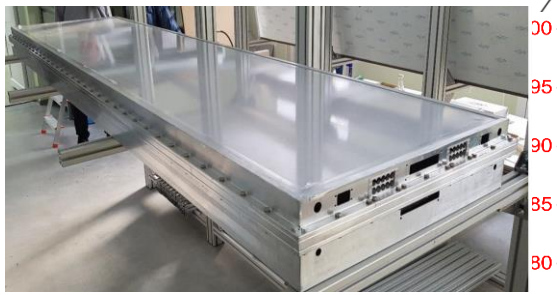

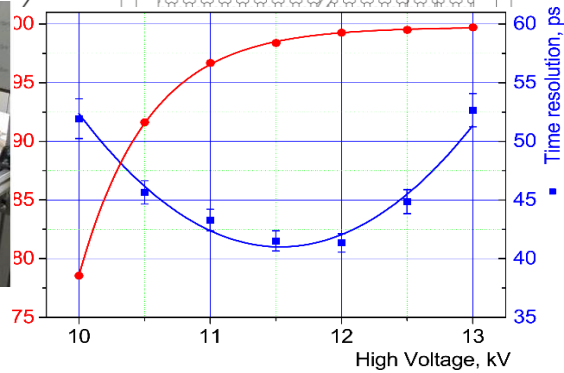

	Number of detectors	Number of readout strips	Sensitive area, m^2	Number of FEE cards	Number of FEE channels
MRPC	1	24	0.192	2	48
Module	10	240	1.848	20	480
Barrel	280	6720	51.8	560	13440 (1680 chips)

So far 20% of all mRPCs are assembled
At the end of October 2020 all mRPCs will be assembled.
Problems with leaks of gas box has been solved.
Assembled half sectors of TOF are under Cosmics tests

Electromagnetic Calorimeter (ECAL) for Multi Purpose Detector (MPD)

ECal – THU – Tsinghua University., Yi Wang
SDU –Shandong University
HU- Huzhou University Fuqing Wang

There is expectation that ECal modules assembling (75%) in China will be financed beginning 2020)
Production of 25% modules in Russia is going on according to the Plan

Barrel ECAL ~ 43000 ECAL modules

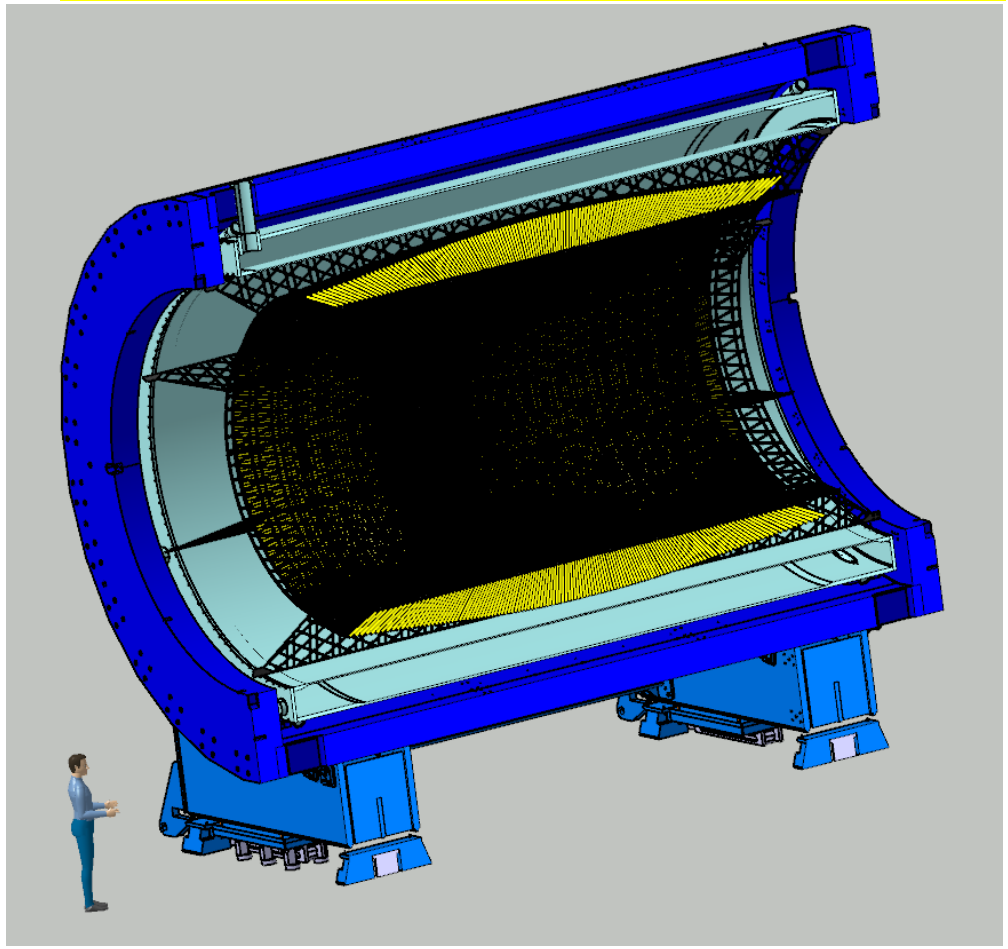

Prototype of one module

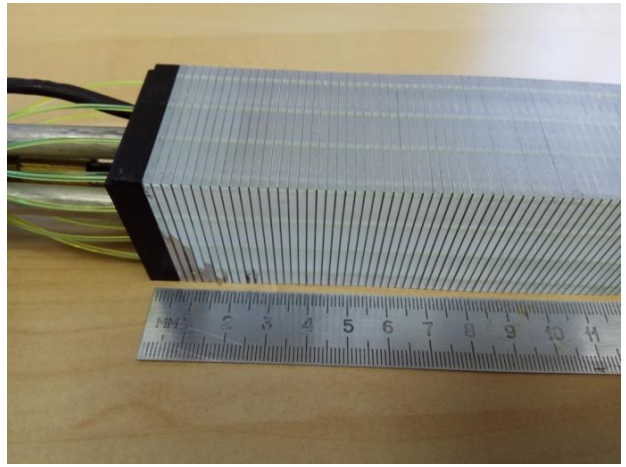

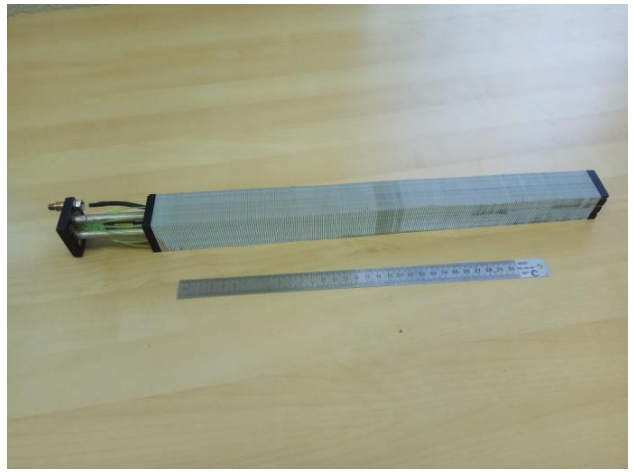

Support Frame for detectors inside of the Solenoid

The structure of Support Frame is made of carbon fiber which allows for deformation less than 3 mm under load with detectors (~80 T). The thickness of the walls is 2-4 mm.

Producer - The Central Research Institute for Special Machinery, Khotkovo, Moscow region is a leading Russian enterprise in design and production of structures on the basis of advanced polymer composite materials for rocket & space engineering, transport, power, petrochemical machinery and other industries.

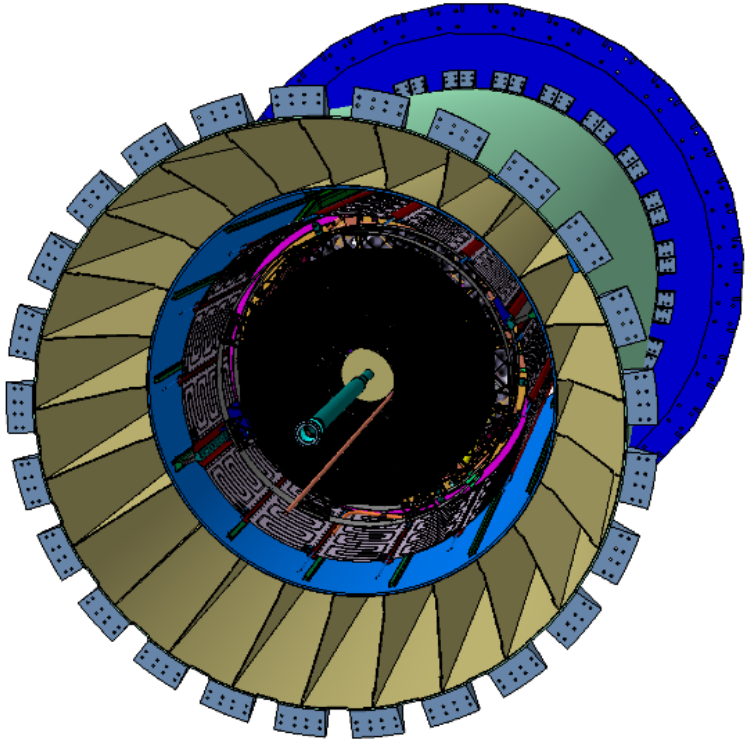

- design is ready,
- mechanical strength calculations are finished
- the contract with Company on construction of the Support Frame is under preparation
- according to schedule the Frame will be transported to Dubna in November 2020
- Representatives of the Company will participate in the process of installation of Support Frame into MPD and its alignment

MPD and electronics platform in the assembling doc

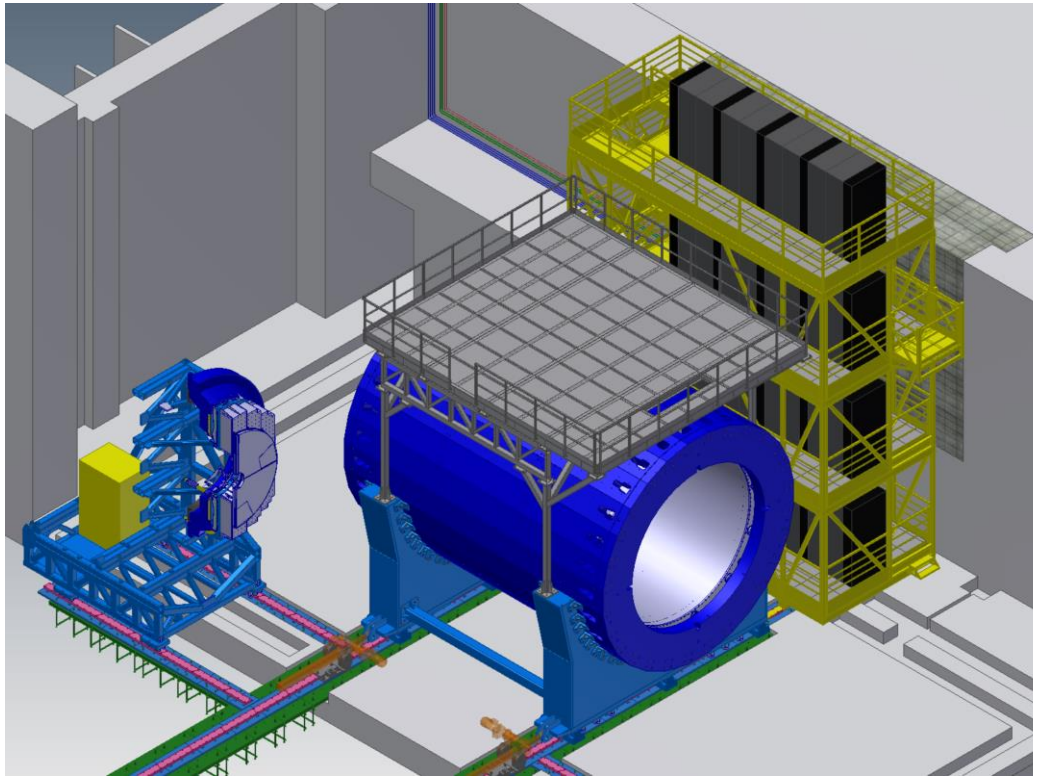

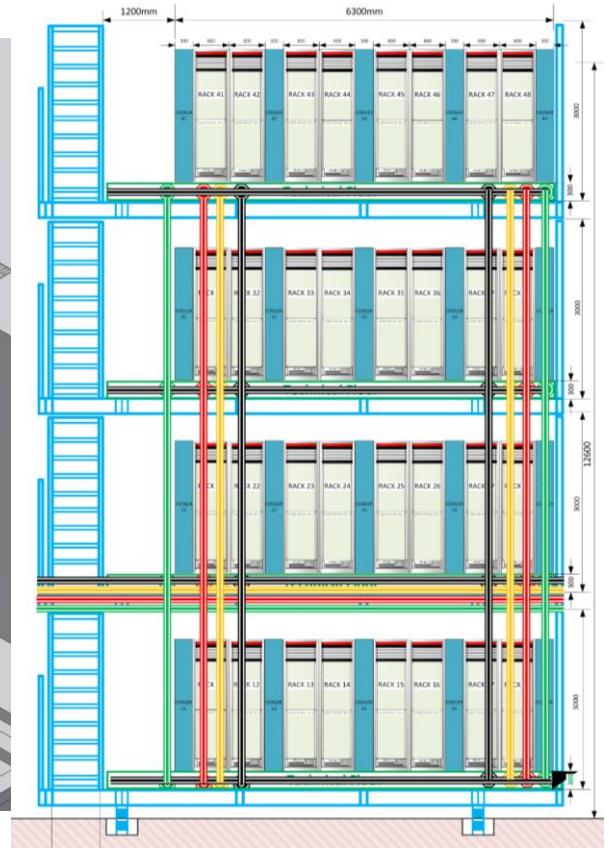

- Electronics platform have 4 levels with 8 racks on each level
- Each Rack provides cooling, fire safety and radiation control system

- Cable ducts connect detectors inside of MPD and Electronics Platform

Team from WUT (leader - Marek Peryt) is a good example when group takes a full responsibility for design and construction the system

The mechanical part of the Platformed is ready

MPD Cosmic Ray Detector (MCORD)

NCBJ, Swerk - WUT, Warsaw (Poland)

18 scientists+12 engineers

As soon as we plan to start tests of MPD subsystems before Collider operation,-
the Cosmic Ray Detector will be requested for Commissioning and tests of the MPD.
The signals from MCORD will be used for TPC and TOF tests after their installation.
We'll need the elements of MCORD (as scintillation panels with readout electronics) as soon as March 2021

Cosmic Ray Detector consists of plastic scintillators with SiPM (Fototubes) light converters

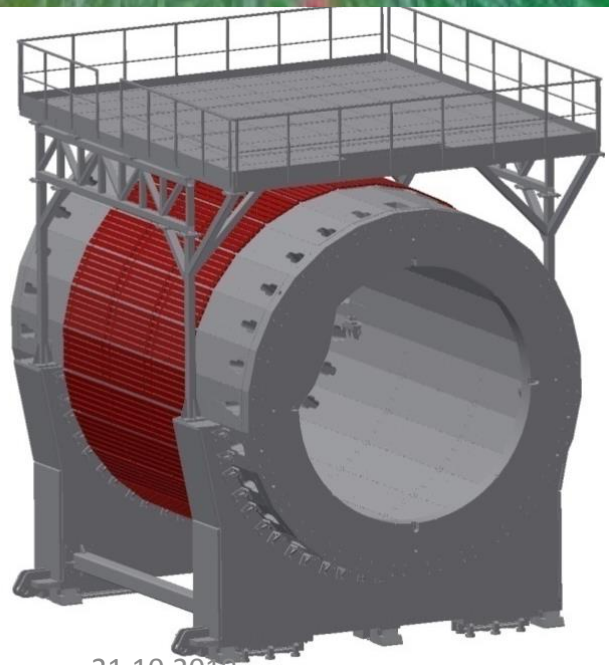

a) Trigger (for testing or calibration)
- testing before completion of MPD (testing of TOF, ECAL modules and TPC)
- calibration before experimental session

b) Veto (normal mode - track and time window recognition)
Mainly for TPC and eCAL

Additionally

c) Astrophysics (muon shower and bundles)
- unique for horizontal events
Working in cooperation with TPC

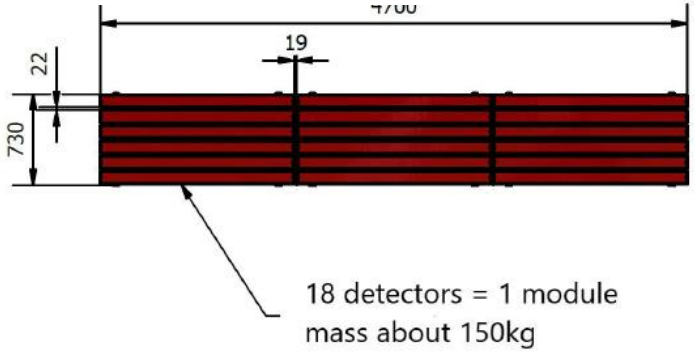

5. MCORD Detector

SCINTILLATORS

Number of scintillators:	660 pcs
Dimensions of scintillators:	95x25x1500 [mm]
Dimensions of detector:	100x30x1554 [mm]
Scintillators are placed in the rectangle profile	10x30x2.5 [mm]
Weight of detector:	6.5 kg
Material of scintillators casing:	Aluminum alloy

MODULES

Number of detector in one module:	18
Number of Modules:	28
Dimensions of module:	730x90x4700 [mm]
Weight of one module:	150 kg

SiPM/MMPC

Number of SiPMs (Chanels)	1320
Number of SiPMs (with two fibers)	2640

RESOLUTION

Position resolution: In X axis – up to 5 cm, In Y axis – 5-10 cm
Time Resolution – about 300-500 ps
Number of events (particles): about 100-150 per sec per m2
Calculated Coincidence factor: about 98%

Forward Hadron Calorimeter (FHCal)

Leaders: A.Ivashkin, F.Guber (INR, Troitsk) + MiPhi

- **Two-arms at ~3.2 m from the interaction point.**
- **Each arm consists of 45 individual modules.**
- **Module size 150x150x1100cm^3 (55 layers)**
- **Pb(16mm)+Scint.(4mm) sandwich**
- **7 longitudinal sections**
- **6 WLS-fiber/MAPD per section**
- **7 MAPDs/module**

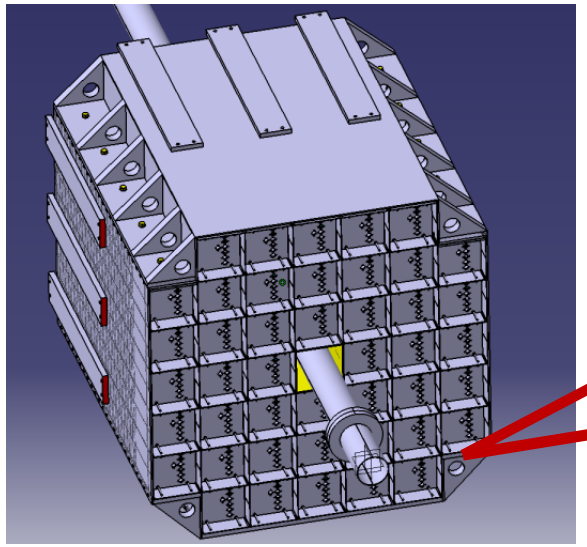

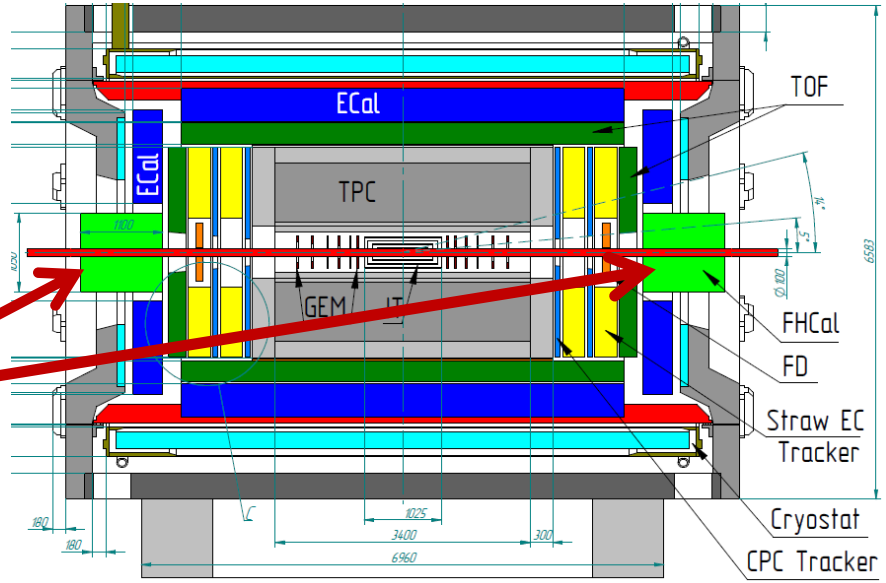

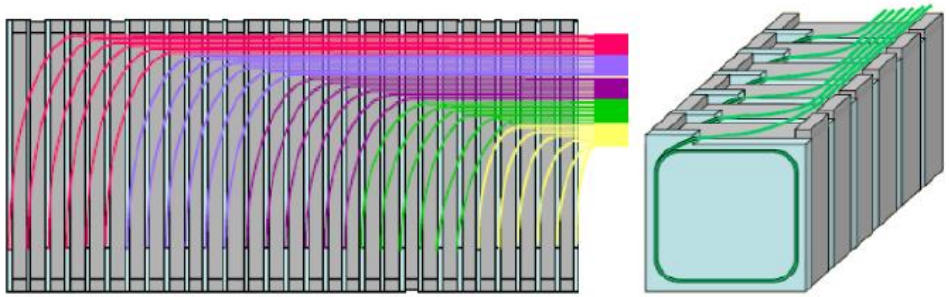

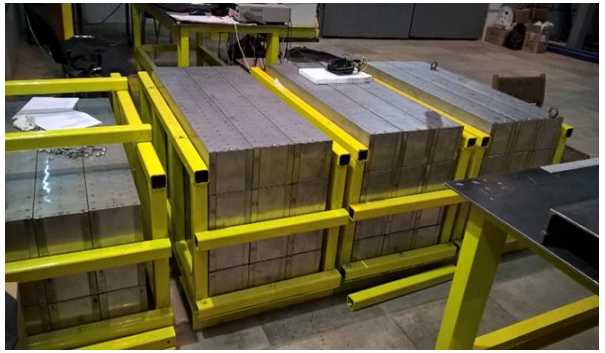

1. We have 100 modules ready (need 88+12 are spare) Produced modules are under test on Cosmic

2. FE Electronics is under production – will be ready at the end of 2019

3. Design of the Support platform for FHCal is under develpment

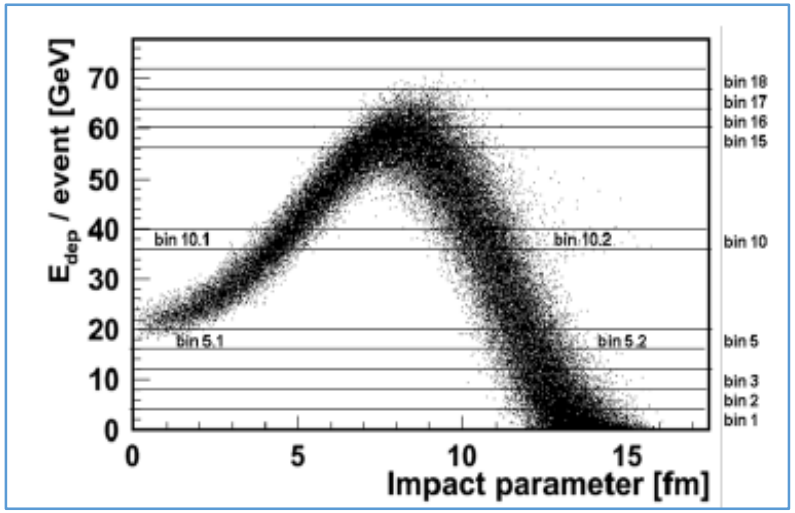

Conception of FHCal Integration

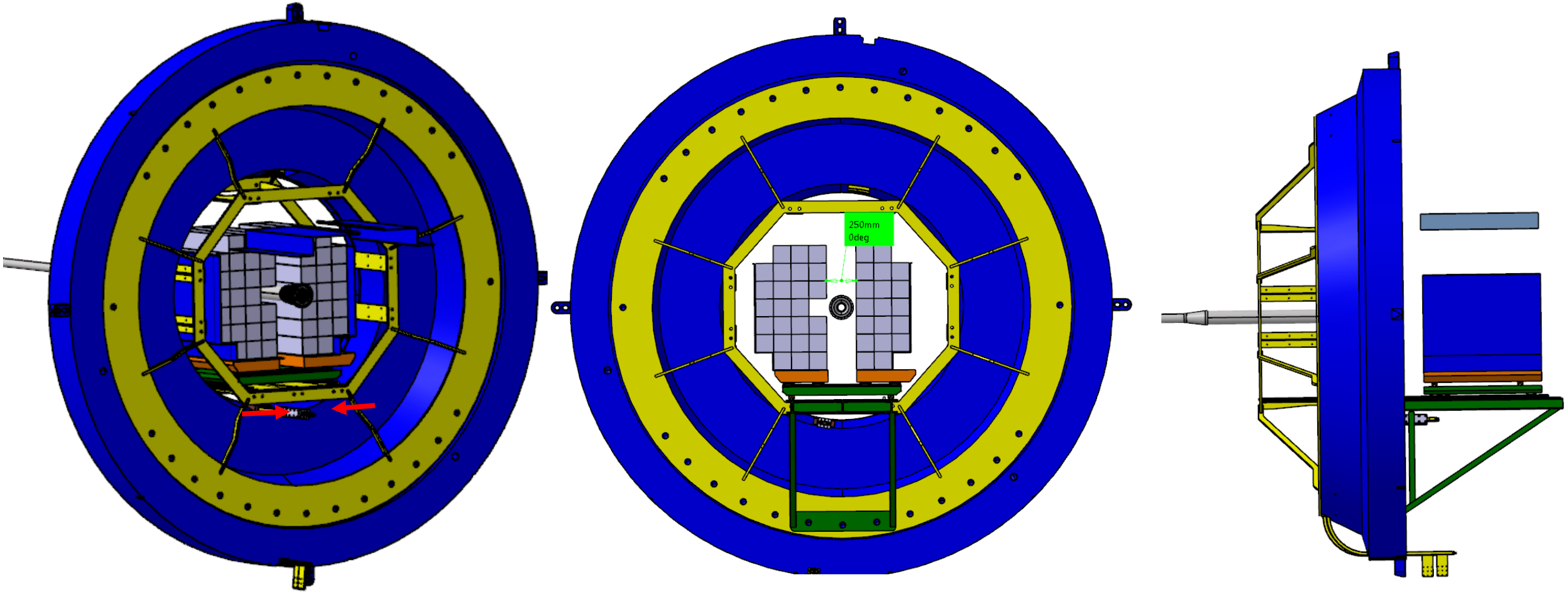

Assembling of the FHCal in the pole

Beam Pipe Stage I:

Our requirement for vacuum in the straight part of MPD is not worse than 10^{-10} torr.
Working version of pipe will consists of three parts – central made of Beryllium and two end parts made of Aluminum allow.
So far we have contract with Institute of Beryllium in Moscow for production two Be beam pipes with inner diameter 62 mm.
For Aluminum beam pipes (pc) we have prepared Contract with two Companies in Moscow

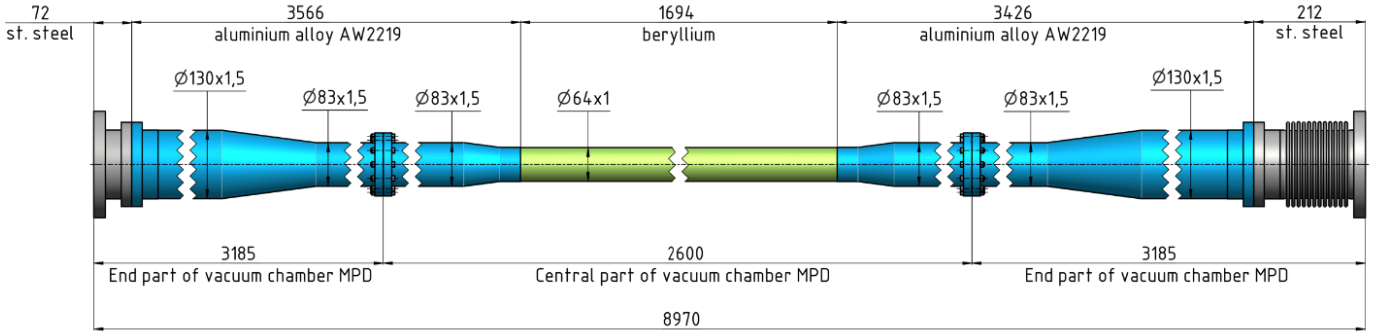

We plan to start work of MPD with Aluminum beam pipe in order to get experience with installation.

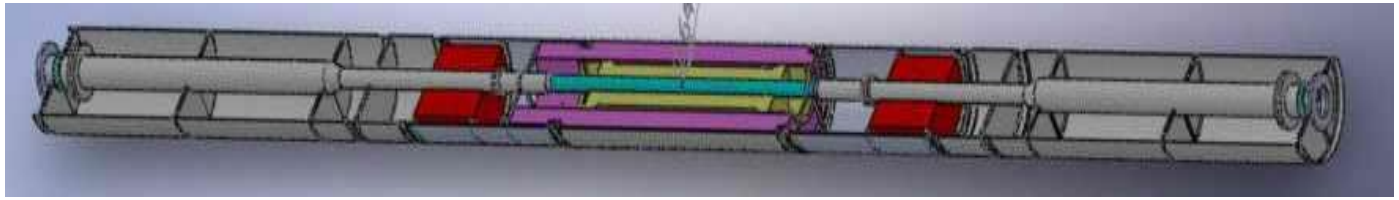

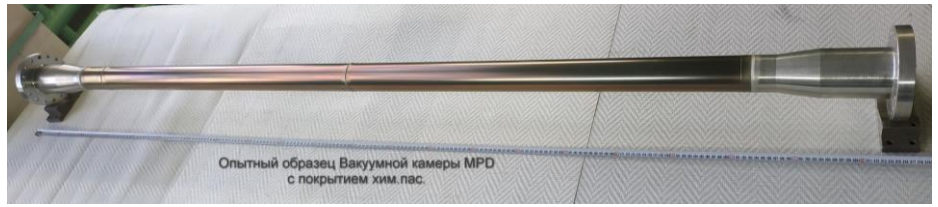

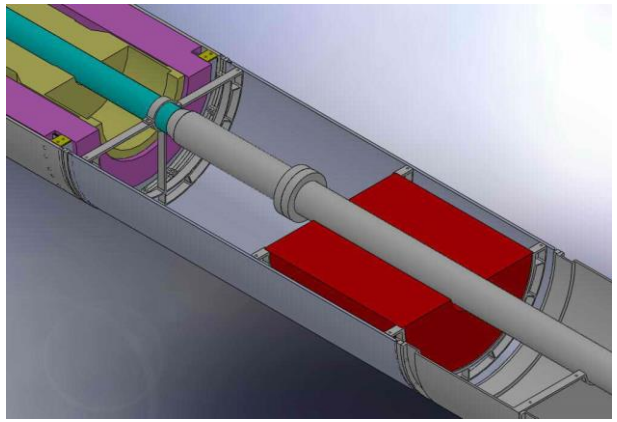

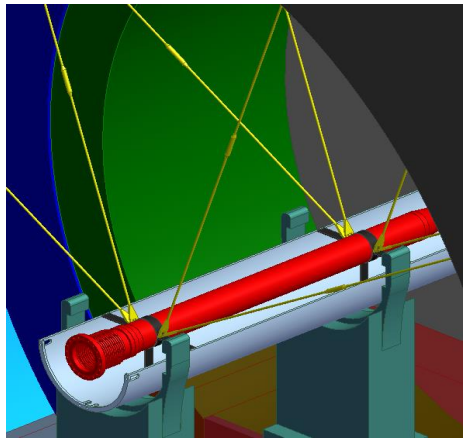

We need in the MPD team one or two experts on Ultra High Vacuum Technics
- to care beam pipes,
- to communicate with vacuum group of Collider
- communicate with experts in CERN to get experience

Milestones of MPD assembling

1. MPD Yoke parts are in Dubna
2. April 2020 - MPD Hall and pit are ready to store and unpack Yoke parts
3. May-June 2020 - Magnet Yoke is assembled for alignment checks
4. June 2020 - Solenoid is ready for transportation from ASG (Italy)
5. July 2020 - Solenoid is in Dubna
6. August 2020 - Assembling of Magnet Yoke and Solenoid at JINR
7. September 2020 - Preparation for switching on the Solenoid (Cryogenics, Power Supply et cet.)
8. Oct - Nov 2020 - Magnetic Field measurement
9. December 2020 - Installation of Support Frame
10. Jan - April 2021 - Installation of subsystems, Electronics Platform, Cabling
11. May 2021 Commissioning
12. June 2021 – Readiness for Cosmic Ray tests

Thank you!

Summary

- **Progress in MPD project realization in 2017 – 3Q 2019 (Magnet, Solenoid, TPC, TOF, FFD, FHCAL)**

- **Our goal is to start data taking with MPD in the 2Q 2021**

- **We need one expert and 2-3 engineers for Cooling system**

- **We need more young engineers for MPD running (cooling system, vacuum, technical and engineer design, engineering support)**

- **It is time to involve more students and young scientists in each subsytem group to prepare them for work in the shifts and to study parameters of MPD. They should learn MPD Root, tracking, clusterization, calibration and many other things before MPD starts running**

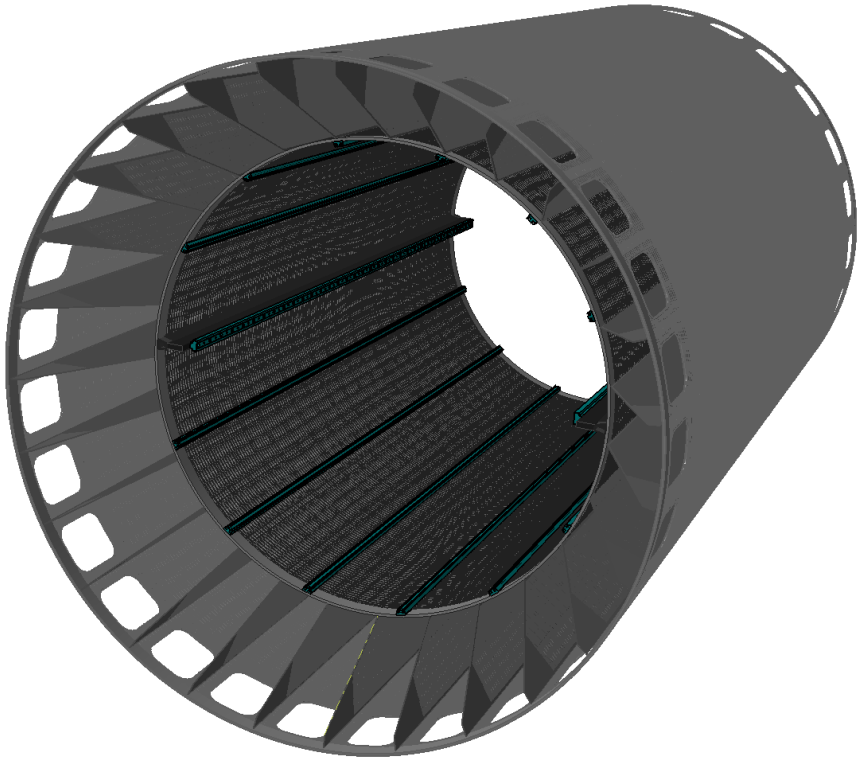

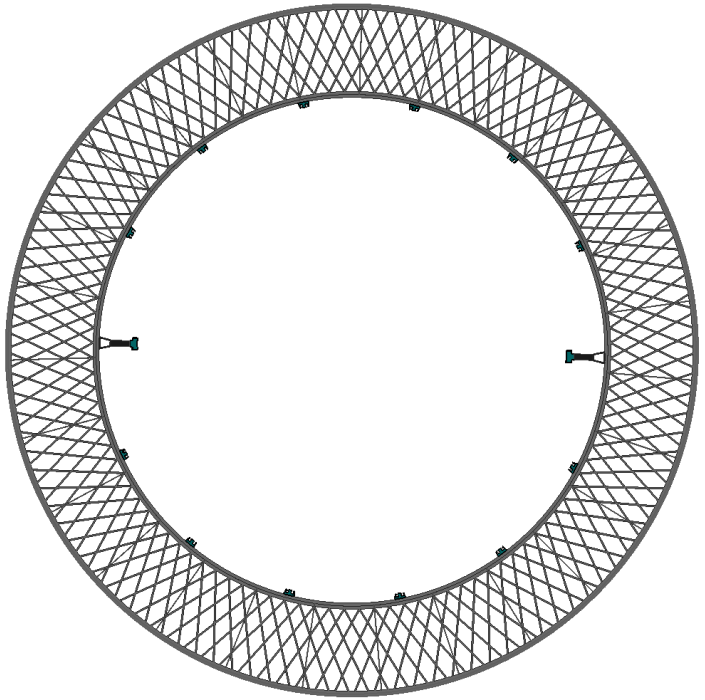

Item	Dimension
Length of the TPC	**340cm**
Outer / Inner radius of vessel	**140cm / 27 cm**
Outer / Inner radius of the drift volume	**133cm / 34cm**
Length of the drift volume	**163 cm (of each half)**
Electric field strength	**~ 140 V/cm**
Drift gas	**90% Ar+10% CH_4 / 80%Ar+20%CO_2**
Gas amplification factor	**~ 10^4**
Drift velocity	**5.45 cm/μs;**
Drift time	**< 30 μs;**
Temperature stability	**< 0.5°C**
Number of readout chambers	**24 (12 on each side)**
Number of pads	**95232**
Maximal event rate	**< 7 кHz (at Lum.= 10^{27})**
Electronics shaping time	**~180 ns**
Signal-to-noise ratio	**30:1**
Signal dynamical range	**10 бит**
Signal sampling	**10 МГц**
Two-track resolution	**~1 cm**